AGENDA

LOS ANGELES REGIONAL
INTEROPERABLE COMMUNICATIONS SYSTEM AUTHORITY

BOARD OF DIRECTORS SPECIAL MEETING
Thursday, October 4, 2018 • 9:00 a.m.
Los Angeles County Sheriff's Department
The Hertzberg Davis Forensic Science Center
Conference Room 223 through 227
1800 Paseo Rancho Castilla, Los Angeles, CA 90032

Los Angeles Regional Interoperable Communications System Authority (the "Authority")

AGENDA POSTED: September 28, 2018
Complete agendas are made available for review at the designated meeting location. Supporting documentation is available at the LA-RICS Office located at 2525 Corporate Place, Suite 100, Monterey Park, CA 91754 during normal business hours and may also be accessible on the Authority's website at http://www.la-rics.org.

Members:	Alternates:
1. **Sachi Hamai**, CEO, County of Los Angeles	**John Geiger**, General Manager, CEO, County of Los Angeles
2. **Daryl L. Osby**, Vice-Chair, Fire Chief, County of Los Angeles Fire Dept.	**Chris Bundesen**, Asst., Fire Chief, County of Los Angeles Fire Dept.
3. **Jim McDonnell**, Chair, Sheriff, Los Angeles County Sheriff's Dept.	**Dean Gialamas**, Division Dir., Los Angeles County Sheriff's Dept.
4. **Cathy Chidester**, Dir., EMS Agency, County of LADHS	**Kay Fruhwirth**, Asst., Dir., EMS Agency, County of LADHS
5. **Chris Donovan,** Fire Chief, City of El Segundo Fire Dept.	**Scott Haberle**, Fire Chief, City of Monterey Park Fire Dept.
6. **Joe Ortiz**, Chief of Police, City of Sierra Madre Police Dept.	**Donna Cayson**, Captain, City of Sierra Madre Police Dept.
7. **Mark R. Alexander**, City Manager, CA Contract Cities Assoc.	**Marcel Rodarte**, Executive Dir., CA Contract Cities Assoc.
8. **Mark Fronterotta**, Chief of Police, City of Inglewood Police Dept.	**Louis Perez,** Deputy Chief, City of Inglewood Police Dept.
9. **Chris Nunley**, Chief of Police, City of Signal Hill Police Dept.	**Brian Leyn**, Captain, City of Signal Hill Police Dept.
10. **John Curley**, Chief of Police, City of Covina Police Dept.	**David Povero**, Captain, City of Covina Police Dept.

Officers:

Scott Edson, Executive Director
John Naimo, County of Los Angeles Auditor-Controller
Joseph Kelly, County of Los Angeles, Treasurer and Tax Collector
Priscilla Lara, Board Secretary

LA-RICS

NOTE: ACTION MAY BE TAKEN ON ANY ITEM IDENTIFIED ON THE AGENDA

I. CALL TO ORDER

II. ANNOUNCE QUORUM – Roll Call

III. APPROVAL OF MINUTES (A)

A. September 13, 2018 – Special Meeting Minutes

Agenda Item A

IV. PUBLIC COMMENTS

V. CONSENT CALENDAR – (None)

VI. REPORTS (B-E)

B. Director's Report – Scott Edson

- Executive Summary

Agenda Item B

C. Project Manager's Report – Justin Delfino

Agenda Item C

D. Joint Operations and Technical Committee Chairs Report – Tab Rhodes

E. Finance Committee Report – No Report

VII. DISCUSSION ITEMS (F-G)

F. Outreach Update

Agenda Item F

G. PSBN Onboarding Update

Agenda Item G

VIII. ADMINISTRATIVE MATTERS (H-K)

H. APPROVE AN AGREEMENT FOR ENGINEERING DESIGN AND RELATED SERVICES

It is recommended that your Board:

1. Find the proposed actions are exempt from the California Environmental Quality Act (CEQA) for the reasons stated in this Board letter.

2. Approve the Engineering and Design Services Agreement with David Evans and Associates, Inc. (David Evans and Associates), substantially similar in form to the attached Enclosure, with a contract term that will commence upon execution of the Agreement and continue through final acceptance of all work for Round 2 of the PSBN Project by the Authority, for a total not-to-exceed contract amount of $2,600,400.

3. Delegate authority to the Executive Director as follows:

   a. To execute the Agreement substantially similar in form to the attached Enclosure.

   b. To approve and execute Amendments to the Agreement that do not impact the total not-to-exceed contract amount, the term, or any terms or conditions of the Agreement, provided any such Amendments are approved as to form by Counsel to the Authority.

   c. To issue Notices to Proceed for work contemplated in the Agreement.

Agenda Item H

I. APPROVE AMENDMENT NO. 32 FOR AGREEMENT NO. LA-RICS 008 FOR LOS ANGELES REGIONAL INTEROPERABLE COMMUNICATIONS SYSTEM PUBLIC SAFETY BROADBAND NETWORK.

It is recommended that your Board:

1. Approve Amendment No. 32 to Agreement No. LA-RICS 008 for the PSBN with Motorola Solutions, Inc. (Motorola), in substantially similar form to the (Enclosure), which extends the Term of the Agreement for an additional thirty

(30) days from November 1, 2018, until November 30, 2018, unless sooner terminated or extended in whole or in part, at no cost.

2. Delegate Authority to the Executive Director to execute an amendment to extend the term for an additional thirty (30) days, at no cost, should the need exist, to allow for the finalization of scope for the PSBN Round 2 buildout, provided such amendment is approved as to form by Counsel to the Authority.

3. Delegate Authority to the Executive Director to execute Amendment No. 32, in substantially similar form to the enclosed Amendment.

Agenda Item I

J. APPROVE AMENDMENT NO. 35 TO AGREEMENT NO. LA-RICS 007 FOR LOS ANGELES REGIONAL INTEROPERABLE COMMUNICATIONS SYSTEM – LAND MOBILE RADIO SYSTEM

It is recommended that your Board:

1. Make the following findings:

   a. Find that the inclusion of one (1) LMR System Site (Winding Way [WWY]) into Phase 2 (Site Construction and Site Modification), Phase 3 (Supply LMR Components), Phase 4 (LMR System Implementation), and exercising of the Unilateral Options to align with the updated LMR System Design is within the scope of the design, construction, implementation, operation and maintenance activities for the LMR System previously authorized at this site, which your Board previously found statutorily exempt from review under CEQA pursuant to Public Resources Code Section 21080.25, the exemption adopted specifically for the Los Angeles Regional Interoperable Communications System (LA-RICS) project, and any leased circuit work that may occur outside of Site WWY, if needed to provide network connectivity to the LMR System, categorically exempt under CEQA pursuant to Guidelines section 15301 (existing facilities), 15303 (new construction or conversion of small structures) and 15304 (minor alterations to land).

2. Approve Amendment No. 35 (Enclosure) to Agreement No. LA-RICS 007 for a LMR System with Motorola Solutions, Inc. (Motorola), which revises the Agreement to reflect the following:

a. Reconciliation to remove one (1) LMR System Site Olinda (OLI) to align with the updated LMR System Design for a cost decrease in the amount of $701,234.

b. Inclusion of one (1) LMR System Site Winding Way (WWY) into the scope of Phase 2 (Site Construction and Site Modification), Phase 3 (Supply LMR Components), Phase 4 (LMR System Implementation), and exercising the Unilateral Options of the same, to align with the updated LMR System Design for a cost increase in the amount of $1,064,388.

c. Make changes necessary to incorporate LMR Change Order Modifications related to LMR System Site San Dimas (SDW) for a cost increase in the amount of $13,115.

d. Make changes necessary to reflect an administrative reconciliation, a reconciliation related to the removal of certain Authority equipment, in particular an Uninterruptible Power Supply (UPS), from the Los Angeles Police Department's Valley Dispatch Center (LAPDVDC) for a cost increase in the amount of $601.

3. Authorize an increase to the Maximum Contract Sum in the amount $376,870 from $297,481,203 to $297,858,073 when considering the cost decreases and increases.

4. Allow for the issuance of one or more Notices to Proceed for the Work contemplated in Amendment No. 35.

5. Delegate authority to the Executive Director to execute Amendment No. 35, in substantially similar form, to the enclosed Amendment (Enclosure).

Agenda Item J

K. APPROVE THE IMPLEMENTATION OF THE LA-RICS INFORMATION TECHNOLOGY AND SECURITY PROGRAM POLICIES (POLICY NOS. 027-2018 AND 028-2018)

It is recommended that your Board:

1. Approve the following enclosed LA-RICS IT Security Program Policies (Policies) to establish and enhance the Authority's Information Technology (IT) Security Program.

- Board Policy No. 027-2018 – LA-RICS Information Technology Physical Security Policy (Enclosure 1)
- Board Policy No. 028-2018 – LA-RICS Information Technology Risk Assessment and Audit Compliance Policy (Enclosure 2)

2. Authorize the Executive Director to implement appropriate procedures and/or plans necessary to carry out the Policies.

Agenda Item K

IX. MISCELLANEOUS – NONE

X. ITEMS FOR FUTURE DISCUSSION AND/OR ACTION BY THE BOARD

XI. CLOSED SESSION REPORT

XII. ADJOURNMENT and NEXT MEETING:

Thursday, November 1, 2018, at 9:00 a.m., at the Los Angeles Sheriff's Department, Scientific Services Bureau, located at 1800 Paseo Rancho Castilla, Los Angeles, CA 90032.

LA-RICS

BOARD MEETING INFORMATION

Members of the public are invited to address the LA-RICS Authority Board on any item on the agenda prior to action by the Board on that specific item. Members of the public may also address the Board on any matter within the subject matter jurisdiction of the Board. The Board will entertain such comments during the Public Comment period. Public Comment will be limited to three (3) minutes per individual for each item addressed, unless there are more than ten (10) comment cards for each item, in which case the Public Comment will be limited to one (1) minute per individual. The aforementioned limitation may be waived by the Board's Chair.

(NOTE: Pursuant to Government Code Section 54954.3(b) the legislative body of a local agency may adopt reasonable regulations, including, but not limited to, regulations limiting the total amount of time allocated for public testimony on particular issues and for each individual speaker.)

Members of the public who wish to address the Board are urged to complete a Speaker Card and submit it to the Board Secretary prior to commencement of the public meeting. The cards are available in the meeting room. However, should a member of the public feel the need to address a matter while the meeting is in progress, a card may be submitted to the Board Secretary prior to final consideration of the matter.

Parking passes for attendees of the LA-RICS Joint Powers Authority Board Meeting can be obtained at the main entrance office of the Hertzberg Davis Forensic Science Center, located at 1800 Paseo Rancho Castilla, Los Angeles, CA 90032.

It is requested that individuals who require the services of a translator contact the Board Secretary no later than the day preceding the meeting. Whenever possible, a translator will be provided. Sign language interpreters, assistive listening devices, or other auxiliary aids and/or services may be provided upon request. To ensure availability, you are advised to make your request <u>at least 72 hours prior to the meeting you wish to attend</u>. (323) 881-8291 or (323) 881-8295

SI REQUIERE SERVICIOS DE TRADUCCION, FAVOR DE NOTIFICAR LA OFICINA CON 72 HORAS POR ANTICIPADO.

The meeting is recorded, and the recording is kept for 30 days.

BOARD OF DIRECTORS
SPECIAL MEETING MINUTES

LOS ANGELES REGIONAL
INTEROPERABLE COMMUNICATIONS SYSTEM AUTHORITY

Thursday, September 13, 2018 • 9:00 a.m.
Los Angeles County Sheriff's Department
The Hertzberg Davis Forensic Science Center
Conference Room 263
1800 Paseo Rancho Castilla, Los Angeles, CA 90032

Board Members Present:
Joe Ortiz, Chief of Police, City of Sierra Madre Police Dept.
Chris Nunley, Chief of Police, City of Covina Police Dept.

Alternates For Board Members Present:
John Geiger, General Manager, CEO, County of Los Angeles
Chris Bundesen, Asst., Fire Chief, County of Los Angeles Fire Dept.
Dean Gialamas, Division Dir., Los Angeles County Sheriff's Dept.

Officers Present:
Scott Edson, LA-RICS Executive Director
Priscilla Lara, LA-RICS Board Secretary

Absent:
Cathy Chidester, Dir., EMS Agency, County of LADHS
Chris Donovan, Fire Chief, City of El Segundo Fire Dept.
Mark Alexander, City Manager, CA Contract Cities Assoc.
Louis Perez, Deputy Chief, City of Inglewood Police Dept.
John Curley, Chief of Police, City of Covina Police Dept.

AGENDA ITEM A

NOTE: ACTION MAY BE TAKEN ON ANY ITEM IDENTIFIED ON THE AGENDA

I. CALL TO ORDER

Director Dean Gialamas called the Special Meeting of the Board to order at 9:06 a.m.

II. ANNOUNCE QUORUM – Roll Call

Director Dean Gialamas asked for a roll call and acknowledged a quorum was present.

III. APPROVAL OF MINUTES (A)

A. July 31, 2018 – Special Meeting Minutes

Board Member Nunley motioned first, seconded by Alternate Board Member Perez.

Ayes 6: Ortiz, Nunley, Geiger, Bundesen, Gialamas and Perez

MOTION APPROVED

IV. PUBLIC COMMENTS – (NONE)

V. CONSENT CALENDAR – (NONE)

VI. REPORTS (B-E)

B. Director's Report – Susy Orellana-Curtiss

Administrative Deputy Susy Orellana-Curtiss provided the Director's Report on behalf of the Executive Director Edson. Administrative Deputy Orellana-Curtiss stated the Long Term Evolution (LTE) project would be an expansion of 26 more sites to complement the 76 we already built, constructed, and transferred to AT&T, to expand Public Safety LTE FirstNet in the Los Angeles region. The vision is to fill in the gaps in the basin, potentially the mountains and Catalina Island.

Administrative Deputy Orellana-Curtiss went on to state both LTE and Land Mobile Radio (LMR) construction projects have grant deadlines and after discussions with our Project Management Team and Motorola Team, we made the decision to explore an outside Architectural and Engineering (A & E) firm to create the design and drawings for the standalone LTE sites. We plan to have Motorola design and install the LTE equipment on the sites co-located with LMR since.

Administrative Deputy Orellana-Curtiss stated due to this aggressive schedule, Executive Director Edson reached out to each of you last month to inform you LA-RICS had issued a Request for Proposal (RFP) for A&E services through the Department of Public Works. You will be receiving an update on the process under Agenda Item H. Monday, September 10, 2018, was the deadline for receipt of proposals and LA-RICS is moving forward with the evaluation process.

LA-RICS anticipates 17 LTE sites will be designed and constructed via use of the A&E Firm and Construction Firm, and Motorola will build nine (9) co-located LTE/LMR sites. Administrative Deputy Orellana-Curtiss stated following this path allows for an aggressive and parallel design and construction deployment. Agenda Item H is a discussion item providing additional details of the RFP process for the A&E services RFP and to answer any questions relating to this procurement.

Administrative Deputy Orellana-Curtiss stated Agenda Item I addresses modifications to our existing policy for the permit application process. This will expand delegated authority to include certain instances where we would like to allow the Executive Director to sign submissions of permits that will allow efficient processes. The Team will provide additional details under Agenda Item I.

As promised at our last Board meeting Agenda Item J is a draft of Information Technology and Security Program Policies for your Board consideration.

In addition, Agenda Item K is a huge accomplishment of the project with a Site Access Agreement for LACF072 that will allow for a LMR site in the Malibu area. This will greatly improve the coverage in the area and help us fight fires that too often occur in the area.

Finally, as you know for the benefit of public safety and those we serve, AT&T has agreed to assume all 76 sites we built in this region under LTE Phase 1. Agenda Item L includes an assignment of 26 County owned sites out of the 76 sites. This is a huge accomplishment and will allow AT&T to integrate these sites on a gratis basis as long as Band 14 is always included at these sites.

Administrative Deputy Orellana-Curtiss stated again this is a huge accomplishment and we believe the written agreement is a model for other cities to follow as they negotiate their agreements with AT&T. LA-RICS has offered to share our template agreement with these agencies should they want to use it as sample language. The details relating to this item will be presented by Counsel Truc Moore under Agenda Item L.

This concludes the Director's Report.

C. Project Manager's Report – Justin Delfino

Project Manager Delfino introduced the new LMR and LTE Project Managers with Jacobs. Steve Page is the new LMR Project Manager and Rosalyn Knowlton is the new LTE Project Manager. Project Manager Delfino stated both Motorola and Jacobs have brought on new team members for LMR and LTE. With Jacobs and Motorola having separate dedicated PM's, the two Programs will be more efficiently run. On September 5th, 2018, an Executive Management Meeting took place with Motorola and LA-RICS. The message from Motorola is that they have committed to staffing and ensuring that the appropriate amount of construction crews, design and architecture engineers will be present for the major ramp up in Phase 2 activity currently planned between now and the end of the year.

Project Manager Delfino presented a PowerPoint presentation to the Board that included the following updates:

LTE Round 2 Highlights September 2018:

- A&E vendor expected to start in October 2018.
- Team will lead and manage production of 40+ site drawings and value engineering efforts.
- LA-RICS Team is collaborating with Motorola and AT&T for site configurations and co-location opportunities.
- This requires the involvement of LMR and LTE System Managers to coordinate scope, scheduling, and cost.
- Bill of Materials are being generated to utilize previously procured materials.

UASI 16 Planned Work Status:

1. AGH: Plans at 75% CD after re-formatting site and permit bifurcation.
2. BKK: Load study passed, plans at 75% CD.
3. CCT: Ph.2 change work – generator plans at 100% CD.
4. CRN: Plans are in plan check review with LA County.
5. POM: Plan check comments from State are 3 days late.
6. SGH: Site started construction.
7. UNIV: Site is being submitted to plan check today.
8. VPK: Ph.4a scheduled to complete in November 2018.

23 sites in total will commence Ph.4 work in addition to the Ph.2 work shown above.

The next sites on the PowerPoint presentation were listed below:

- LAN – (Racks are installed today and some cabling)
- SGH – (There's an existing communications shelter and some abandoned utilities and was a challenge but the site is on track for a 60-day completion)
- LA-RICSHQ – LA-RICS Headquarters – (The roof work is very close to being complete. A cable tray on the left and on the right is the microwave link). The site is expected to complete on time.
- VPK – (Image on the left is an aerial photo to show the lay of the land also the tower, shelter, generator and Glendale Water & Power (GWP) transformer is in. The image on the right has now asphalt and new valley gutter. This site is on track for its scheduled completion date.)

- The next sites on the PowerPoint presentation align with the 20/20/20/20 Track:

Targeted start dates for the end of Summer 2018:

1. UCLA – In Plan check.
2. POM - Plan check.
3. LA-RICSHQ - Started CX.
4. SGH – Started CX.
5. LAN – Started CX.
6. UNIV – Plan check
7. CRN - Plan check error

- 43% of targeted starts reached to date.
- 72% of targeted starts will shift to end of year starts.

Targeted start dates for the end of Year 2018:

1. DPW038 – 100% CD – Plan split
2. CCT - Generator relocation work
3. MIR - 75% CD – Plans split.
4. OAT - 100% CD – Plans split.
5. AGH – 75% - Plans split.
6. LACFDEL – 75% - Request with LACF for conduit use.
7. INDWT – 50% - Plans split.
8. BKK – 75% CD

This concludes the Project Manager's Report.

D. Joint Operations and Technical Committee Chairs Report – No Report

E. Finance Committee Report – No Report

VII. DISCUSSION ITEMS (F-G)

F. Outreach Update

Executive Assistant Wendy Stallworth-Tait presented Agenda Item F and highlighted certain activities from the LA-RICS Outreach Report consisting of Executive Director Edson, Program Director Odenthal and others' meeting with the cities of Bell, Azusa, Irwindale and Industry to provide them with an overall LA-RICS project update; AT&T meetings and a meeting with the U.S. Forest Service to discuss 13 proposed LMR sites in the Angeles National Forest.

There was no further discussion.

G. PSBN Onboarding Update

Executive Assistant Stallworth-Tait presented Agenda Item G and stated onboarding continues with installation of 1,291 routers for the Los Angeles County Sheriff's Department and the installation of 686 routers for the Los Angeles County Fire Department. The transition of PSBN sites to AT&T continues. We are coordinating joint testing with various agencies to minimize any service impacts due to the transition. Device vendor evaluations are underway to help determine router preferences.

There was no further discussion.

H. Request for Proposals for Los Angeles Interoperable Communications System (LA-RICS) Authority Engineering Design and Related Services

Contracts Manager Jeanette Arismendez presented Agenda Item H, an update to the Request for Proposals and stated LA-RICS is expanding its PSBN deployment through PSBN Round 2 which among other things will add 26 sites to the existing deployment and enlisted the County of Los Angeles Department of Public Works (Public Works) to release the RFP for qualified Architectural and Engineering firms for engineering design and related services. Public Works is appropriately equipped to release an RFP of this nature in a timely manner. Contracts Manager Arismendez stated we are moving into the evaluation process and oral interviews will be conducted on September 18, 2018; proposer determination is scheduled to occur on September

20, 2018; negotiations are scheduled to commence on September 24, 2018 and we aim to recommend a contract award to your Board in October.

Alternate Board Member John Geiger made a suggestion that as you get into the negotiations in October to consider bringing forward a document very similar to the final document for the Board to approve. This is so the Board may consider granting delegated authority to the Executive Director. Contracts Manager Arismendez concurred with Alternate Board Member Geiger and will inform the Executive Director.

VIII. ADMINISTRATIVE MATTERS (I-L)

I. APPROVE REVISIONS TO THE POLICY FOR THE LA-RICS PERMIT APPLICATION PROCESS

Contracts Manager Jeanette Arismendez presented Agenda Item H and recommended that the Board approve revisions to the enclosed LA-RICS Ministerial Permit Application Process (Enclosure) to expand the Executive Director's authority currently to approve and sign ministerial permit applications and/or related permits, as well as any other ministerial and/or administrative documents needed in order to comply with codes, ordinances, regulations, to also include signing temporary right of entry permits and temporary access agreements with various jurisdictions and private entities. The expansion of this delegated authority will facilitate access for site preparation work (i.e. staging, parking, etc.) to facilitate site construction and the implementation, operation, and maintenance of the Land Mobile Radio System and the PSBN.

Alternate Board Member Geiger stated the amendment is well written and is the kind of tactic tool we want you to have to avoid delays in construction and moved that it be approved.

Alternate Board Member Geiger motioned first, seconded by Alternate Board Member Gialamas.

Ayes 6: Ortiz, Nunley, Geiger, Bundesen, Gialamas and Perez

MOTION APPROVED.

J. APPROVE THE IMPLEMENTATION OF THE LA-RICS INFORMATION TECHNOLOGY AND SECURITY PROGRAM POLICIES (POLICY NOS. 024-2018, 025-2018, AND 026-2018)

Deputy Program Manager Roth presented Agenda Item J on behalf of the Joint Technical and Operations Committees (Joint Committees) three (3) polices which have received recommendation from the Joint Committees and recommended that the Board approve the following:

1. Approve LA-RICS IT Security Program Policies (Policies) to establish and enhance the Authority's Information Technology (IT) Security Program.

    - Board Policy No. 024-2018 – LA-RICS Information Technology and Security Program Policy (Enclosure 1)

    - Board Policy No. 025-2018 – Use of LA-RICS Information Technology Resources Policy (Enclosure 2)

    - Board Policy No. 026-2018 – LA-RICS Antivirus Security Policy (Enclosure 3)

2. Authorize the Executive Director to implement whatever appropriate procedures and/or plans necessary to carry out the Policies.

Alternate Board Member Geiger asked if LA-RICS currently has a Chief Information Security Officer (CISO). Administrative Deputy Orellana-Curtiss stated we do not have one, however during this deployment phase of the project we rely heavily on the Information Security Officer's and their staff from LASD, LACoFD as well as collaborate with ISD and CIO. Alternate Board Member Geiger stated the Board Letter refers to a CISO; will there be a Point of Contact (POC) or an advisory committee that will formalize the CISO role/position. Administrative Deputy Orellana-Curtiss stated LA-RICS envisions a POC / CISO being formalized and stated this is something staff and Joint Committees have been and will continue to discuss, including whether one is retained from a member agency or brought into the organizational structure of LA-RICS. We will review at the Joint Committee level and then present a recommendation to the Board for consideration. Alternate Board Member Geiger stated the document is well reasoned and recommend to move for approval.

Alternate Board Member Gialamas stated he agreed and echoed Alternate Board Member Geiger's concern that a single POC, CISO or advisory committee having the role and responsibility of overseeing security policies, among others as we advance towards system acceptance. As we get active in developing and implementing the system, we need to consider requirements related to CJIS and the right to know/need to know information, which includes specified training of staff because we have non-law enforcement personnel that may have access to law enforcement information as we move forward. This information has to be protected in transit and at rest. Alternate

Board Member Gialamas stated we need to ensure we are not putting the Authority in jeopardy by violating a CJIS rule or requirement.

Alternate Board Member Geiger motioned first, seconded by Alternate Board Member Bundesen.

Ayes 6: Ortiz, Nunley, Geiger, Bundesen, Gialamas and Perez

MOTION APPROVED.

Counsel Moore then introduced Counsel Roberto Saldana before the presentation Item K as the new LA-RICS Real Estate Counsel, replacing Sonia Chan. Counsel Saldana is joining our office from private practice and is part of the Property and Real Estate Division at County Counsel.

K. APPROVE SITE ACCESS AGREEMENT WITH CONSOLIDATED FIRE PROTECTION DISTRICT OF LOS ANGELES FIRE DISTRICT FOR A LAND MOBILE RADIO SYSTEM SITE

Executive Assistant Stallworth-Tait presented Agenda Item K and recommended that the Board:

1. Find that the approval and execution of the Site Access Agreement (SAA) with the Los Angeles Fire District (Fire District) for the LACF072 site to allow for all Land Mobile Radio (LMR) System work including construction, installation, operation and maintenance of the LMR infrastructure at this site as covered by the SAA are (a) within the scope of the Final Environmental Impact Report (EIR) prepared for the Los Angeles Regional Interoperable Communications System (LA-RICS) Land Mobile Radio (LMR) System, which was previously certified under California Environmental Quality Act (CEQA) on March 29, 2016, and (b) find that the environmental findings and Mitigation Monitoring Program previously adopted by the Board are applicable to the currently recommended actions, and (c) there are no changes to the project at this site or to the circumstances under which the project is undertaken that require revisions to the previous EIR due to new significant effects or a substantial increase in the severity of previously identified significant effects.

2. Authorize the Executive Director to finalize and execute, substantially similar in form to the enclosed, one SAA with the Fire District.

Alternate Board Member Bundesen motioned first, seconded by Alternate Board Member Geiger.

Ayes 6: Ortiz, Nunley, Geiger, Bundesen, Gialamas and Perez

MOTION APPROVED

L. APPROVE SUBLICENSES AND CONSENT TO SUBLICENSE FOR TWO LTE/LMR SITES; AND AMENDMENT, CONSENT, ASSIGNMENT AND ASSUMPTION OF SITE ACCESS AGREEMENTS FOR 26 LTE SITES

Counsel Moore presented Agenda Item L and recommended that the Board approve the following:

1. Find that the approval of the Sublicenses and Consent to Sublicenses for LASDTEM and PLM to allow AT&T-NCW to access, operate, maintain, upgrade, supplement, construct, install, and repair LTE equipment and infrastructure for the NPSBN at that those sites, is within the scope of the activities previously authorized by your Board on March 6, 2014, which your Board previously found statutorily exempt from review under the California Environmental Quality Act (CEQA) pursuant to Public Resources Code Section 21080.25, the exemption adopted specifically for the Los Angeles Regional Interoperable Communications System (LA-RICS) project, and further find that any work related to accessing, operating, maintaining, upgrading, supplementing, constructing, installing, and repairing LTE equipment and infrastructure for the NPSBN at that those sites that may occur as a result of this action, is categorically exempt under CEQA pursuant to CEQA Guidelines sections 15301, 15303 and 15304 for the reasons set forth in this letter and in the record of the project.

2. Find that the approval of the Amendment, Consent, Assignment and Assumption of LTE Site Access Agreements for the 26 sites identified in Attachment 1 to allow AT&T-NCW to continue to access, operate, maintain, upgrade, supplement, construct, install, and repair the LTE equipment and infrastructure for the NPSBN at those sites, is within the scope of the activities previously authorized by your Board on March 6, 2014, February 5, 2015 and July 9, 2015, which your Board previously found statutorily exempt from review under the California Environmental Quality Act (CEQA) pursuant to Public Resources Code Section 21080.25, the exemption adopted specifically for the Los Angeles Regional Interoperable Communications System (LA-RICS) project, and further find that any work related to accessing, operating, maintaining, upgrading, supplementing, constructing, installing, and repairing the LTE equipment and infrastructure for the NPSBN at that those sites that may occur as a result of this action, is categorically exempt under CEQA pursuant to CEQA Guidelines sections 15301, 15303 and 15304 for the reasons set forth in this letter and in the record of the project.

3. Delegate authority to the Executive Director to execute additional assignment agreements for other PSBN sites from Round 1 of the LA-RICS LTE/PSBN project with other jurisdictions and AT&T-NCW, provided they are substantially similar in form to Enclosure 3 with respect to the obligations, terms and conditions that affect and impact the Authority, and provided County Counsel reviews and approves as to form prior to execution by the Executive Director.

Alternate Board Member Gialamas motioned first, seconded by Alternate Board Member Bundesen.

Ayes 6: Ortiz, Nunley, Geiger, Bundesen, Gialamas and Perez

MOTION APPROVED

IX. MISCELLANEOUS

Alternate Board Member Gialamas acknowledged a guest in the audience, LA-RICS previous Interim Executive Director John Radeleff.

Alternate Board Member Gialamas announced new procedures for parking passes resulting from instances of parking pass counterfeit, and stated going forward, staff will meet Board and Alternate Members in front of the Crime Lab to provide a permit. Members of the public attending the Board meeting will follow the same process or can go to the office for a parking permit. LA-RICS will be available to give passes to those members of the public attending the Board meeting.

X. ITEMS FOR FUTURE DISCUSSION AND/OR ACTION BY THE BOARD

XI. CLOSED SESSION REPORT - NONE

XII. ADJOURNMENT and NEXT MEETING:

The Board meeting adjourned at 9:44 a.m., and the next meeting will be held on Thursday, October 4, 2018, at 9:00 a.m., at the Los Angeles Sheriff's Department, Scientific Services Bureau, located at 1800 Paseo Rancho Castilla, Los Angeles, CA 90032.

Executive Summary

October 4, 2018

LTE Update

- PSBN Round 1 sites have all been transferred to AT&T. The Authority is accompanying AT&T to all sites to determine what needs to be accomplished at each site in order to ensure a seamless transition onto the NPSBN.
- PSBN Round 2 is underway with site selection and vendor negotiations ongoing. The environmental team has begun its analysis and we are expecting to deliver the first round of sites for environmental consideration in the next 90 days.
- Site walks have initiated with the Authority, MSI, and Bechtel to identify scope as well as for cost model refinement.

LMR Update

- Zoning Drawing – 22 Sites are at ZD level.
- 50% Construction Drawings – 5 Sites are at 50% level.
- 75% Construction Drawings – 3 Sites are at 75%.
- 100% Construction Drawings – 6 sites are at 100% level.
- Building Permit Received – 21 Sites to date.
- Sites Eligible to Construct: (Includes Completed Sites, Sites Under Construction and/or Equipment Installs & Locations).

1. APC – Junction of I-105 and I-405
2. BMT – Angeles, overlooking CA-138 and I-5
3. CCB – Compton
4. CCT – Downtown
5. CLM – Claremont
6. FCCF – 1320 Eastern Ave
7. HPK – Northern Angeles, overlooking Palmdale
8. LDWP243 – Junction of I-5 and CA-14
9. LASDTEM – Temple City
10. LA-RICS HQ, - Monterey Park
11. MLM – Mira Loma Detention Center
12. MMC – Palmdale – Sierra Pelona Mountain Way
13. MVS – Whittier
14. ONK – Oat Nike
15. PHN – Puente Hills
16. PLM – Palmdale
17. SDW – San Dimas Water Tank
18. TPK – Gorman
19. VPK – Verdugo Peak – Glendale
20. SGH – Signal Hill

LA-RICS

LA-RICS GRANT STATUS					
Grant	**Award**	**Costs Incurred/NTP Issued**	**Invoiced / Paid**	**Remaining Balance**	**Performance Period**
UASI 12	$18,263,579	$18,263,579	$18,263,579	$-	3/31/17
UASI 13	$13,744,067	$13,744,067	$13,744,067	$-	3/31/18
UASI 14	$4,997,544	$4,997,544	$4,997,544	$-	7/31/17
UASI 16	$5,240,456	$5,240,456	$2,297,337	$2,943,119	5/31/19
UASI 17	$34,763,750	$23,463,816	$-	$34,763,750	5/31/20
UASI 18	$35,000,030	$-	$-	$-	Not yet awarded
UASI 19	$35,000,000	$-	$-	$-	Not yet awarded
BTOP	$154,640,000	$122,222,783	$116,831,113	$37,808,887	9/30/20

STATUS OF PSBN AGENCY ONBOARDING		
Agency	**Onboarding Status**	**Number of Units Installed, Demo Kit or SIM cards Received**
LASD	Installations in progress.	1306
LACoFD	Installations in progress.	693
Inglewood PD	FirstNet connection is awaiting final testing. Joint testing of the APN is being scheduled to complete by 10/18/18. 17 vehicle installation complete.	25
Claremont PD	FirstNet connection and testing is complete.	2
Bell PD	Two routers in use. Working directly with FirstNet/AT&T.	2
Covina PD	Two routers in use. Transition options from the LA-RICS APN are under review.	2
UCLA Health	Mobile Stroke Unit in operation using the LA-RICS connection. Transition options from the LA-RICS APN under review.	1
Health Services / EMS	Request for antennas for 3 routers approved pending procurement of installation services and antennas. Transition options from the LA-RICS APN under review.	3
El Segundo Fire & PD	Two routers in use via LA-RICS connection. Routers in use over the LA-RICS APN and transition options from the LA-RICS APN under review.	2
Signal Hill PD	They will work directly with AT&T.	0

Los Angeles Regional Interoperable Communications System

PROJECT DESCRIPTION

Events of September 11, 2001 highlighted the need for first responders to be able to communicate with each other. Emergency communications primarily address local jurisdictional needs and most agencies utilize separate radio towers, equipment, and radio frequencies. LA-RICS is designed to address each of these concerns.

Currently, there is duplication of costs and first responders cannot communicate with each other. Many legacy systems around the County are obsolete and well beyond their useful life. The LA-RICS Project vision is to provide innovative solutions for the public safety community by removing barriers to interoperable voice and data communications and allow individuals and agencies to focus on accomplishing their mission with the tools necessary to provide excellent service to their communities. To accomplish this vision, the program is implementing a County-wide public safety wireless voice and data radio system for all first and secondary responders. Existing radio frequencies will be pooled and the current infrastructure utilized wherever practical.

Design, construction, and deployment of a County-wide Land Mobile Radio (LMR) voice network utilizes 58 sites. Additionally, the Authority is analyzing twenty six (26) sites for the purpose of augmenting the FirstNet deployment in the region. All sites in both the LMR and LTE augmentation will comply with CEQA and NEPA standards.

Project and Construction Management Services will provide network, infrastructure, project, and advisory services across four of the five program phases (Phase 5 – Maintenance is excluded) for each of the LMR and LTE projects:

- **Phase 1 - System design**
- **Phase 2 - Site construction and modification**
- **Phase 3 - Supply telecommunication system components**
- **Phase 4 - Telecommunications system implementation**
- **Phase 5 - Telecommunications system maintenance**

Location:
2525 Corporate Place, Suite 100
Monterey Park, CA 91754

Authority:
Los Angeles Regional Interoperable Communications System

Management:
LA-RICS Project Team

Consultant:
Jacobs Program Management Company

Communications Vendor:
LMR - Motorola Solutions, Inc.
LTE - Motorola Solutions, Inc.

LA-RICS

Monthly Report No. 77
For September 2018
Submitted September 27, 2018

Confidentiality Notice: This document may contain confidential or legally privileged information that is intended only for the individual or entity to whom it was addressed. If you are not the intended recipient, you are hereby notified that any disclosure, copying, distribution, or reliance upon the contents of this report is strictly prohibited. This document is covered by the Electronic Communications Privacy Act, 18 U.S.C. §§ 2510-2521 and is legally protected.

©Copyright 2016 LA-RICS Authority. All Rights Reserved

AGENDA ITEM C

LTE UPDATES

Site/Civil/Closeout

- No new activity

PSBN OnBoarding

- No new activity

Operations/Governance

The LA-RICs Operations team is holding meetings three (3) times a week to focus on the following:

1. Manage network migration from LA-RICS PSBN to AT&T FirstNet
2. Ensure internal LA-RICS operational aspects are in place
3. Develop and Implement Policies

Special Events

Current preparations and activities:

- Testing
  - ◊ ATT – Priority
  - ◊ 75 phones
  - ◊ 25 Routers
  - ◊ ATT Sims (LASD connections only)
  - ◊ Verizon Sims and Mobile cards
  - ◊ Initial Test for POD-Runner (LTE Mobile site)

LTE 2 Updates

LA-RICS is currently implementing PSBN Round 2 as approved by NTIA. The Authority has released a Request for Proposal (RFP) for Engineering Design Services for Phase 1 Design services and is negotiating with the selected vendor. The procurement and negotiations will be complete and the contract for the Design Services is on the agenda for this Board meeting. The team is also focused on site selection and environmental considerations in order to solidify the specific sites the Authority will construct. The Authority is working with AT&T to identify sites that meet the coverage augmentation goals of both public safety and AT&T. Once a site is identified, landowners are contacted and the environmental documentation process begins. A draft schedule was submitted to NTIA on 9/26/2018. The teams have agreed on 21 of the 26 sites to be implemented and are working to identify an additional 10 to 15 sites to in the event one of the selected sites is not able to built. AT&T and the Authority are working to create a joint Site Access/Lease Agreement that allows for the assignability of the assets to AT&T once the site is complete and NTIA approves the asset transfer. Additionally, the Authority is engaged in the process to define the requirements for the COLTs in order to procure and coordinate with AT&T to ensure operation on FirstNet.

The Authority team is coordinating and participating in multiple calls and meetings with AT&T to ensure the schedule and scope of work are being programmed appropriately. The key items for the month are the following:

- Site selection
- Site Deign and Layout
- Real Estate/Acquisition/SAAs
- Site Completion/Hand-off
- Device demo's
- Schedule
- Devices
  - ◊ Antennas for testing
  - ◊ Camera/video placement
  - ◊ Testing scenarios
    - ♦ Video comparison
    - ♦ UL & DL

LMR UPDATES

Environmental Update

- Continued to review Pyramid's and FCS's pre-construction forms and weekly and daily compliance reports.
- Continued visits to LMR sites.
- Resubmitted the EMIS Group 7 data package to the City on September 6 to provide to FEMA. FEMA provided approval on September 20.
- Drafted and filed an NOD for Site LACF072 with Los Angeles County Clerk and on September 13.
- Continued photographing Key Observation Points of LMR sites proposed for installation on the Angeles National Forest.
- Provided draft documentation to address polygon changes at sites CPK and RHT.
- Received concurrence from FCC on September 7 that the project description changes at sites RIH do not require additional National Historic Preservation Act consultation.
- Have accomplished Worker Environmental Awareness Program (WEAP) training for 838 persons as of August 27.

Permitting Support

- The coastal development permit (CDP) package for WWY was submitted to LA County Department of Regional Planning on September 26, 2018. Jacobs continues to review MSI's work and meet weekly with MSI to support MSI's developing and adhering to a P6 schedule for individual coastal permit (CDP) submittal packages for sites included in the Santa Catalina Island and Santa Monica Mountains Local Coastal Programs (LCPs) and under State of California jurisdiction. This effort includes review of MSI-submitted zoning and construction parameters (e.g., proposed tower heights and other site design features) to verify these are consistent with Authority requirements and compliant with each applicable LCP, and directing MSI to modify design drawings as appropriate to meet program needs.
- The Special Use Permit Proposal was submitted on May 3, 2018. The final data requests from the Angeles National Forest (ANF) have been provided to the ANF by the Authority. We anticipate that we will have a determination from the ANF regarding an invitation to submit an SF 299 special use permit (SUP) application package for proposed construction and operations of LMR sites on the ANF on or about October 31, 2018. 11 of the 12 sites on the Forest that require geotech have had geotech completed, one site (MTL2) is awaiting road repairs to be conducted by the ANF starting October 1, 2018 and expected to last about 10 days. Radio spectrum fingerprinting and noise floor monitoring studies are also pending completion. Jacobs and Authority staff continue to meet with key ANF on a monthly basis.

Budget

- Jacobs and MSI are currently working through contractual True-up for all remaining sites Phases 2-4.

Site/Civil

- The Authority and Motorola are focused on meeting UASI 16 spending dates and have also begun construction and equipment orders on UASI 17 sites.
- The LMR Radio Frequency (RF) System Design is now receiving subtle tweaks as final tower heights and antenna orientations are established. All microwave links are confirmed except for San Pedro Hill (SPH), which has been isolated as a link outside the ring topography. All gathered data is currently under review by MSI engineers. MSI and the Authority met to review findings and any lingering issues.
- MSI efforts to complete drawings and submit sites into the jurisdiction for building permits are on-going. Twenty-six (26) building permit applications (PHN, BMT, HPK, LDWP243, LASDTEM, FCCF, APC, CCB, CCT, PLM, MLM, MVS, ONK, LARICSHQ, CLM, MMC, TPK, VPK, POM, LAN, CRN, SDW, SGH, DPW038, OAT and UNIV) have been submitted and approvals have been received for twenty-one (21) of the twenty-six sites. Below is an update of the remaining LMR sites and the status or phase of which the drawings are in. As of 09/24/2018 of the twenty-one LMR Building Permit Applications that have been approved construction is underway on all twenty-one sites.
- 27 each 100% CD's have been received for review and approval by the authority as of 09/24/2018 of which 26 of them have been submitted to respective jurisdictional agencies for review and Building Permit issuance.
- The proposed LMR Rio Hondo (RIH) site at Puente Hills Landfill has been relocated outside the LA County lease area and LA-RICS will be negotiating a Site Access Agreement (SAA) directly with LA County Sanitation District 18. With the addition of RIH, Jacobs is now tasked with obtaining SAA's for 18 LMR sites. SAA's for the remainder sites are being processed by LA County CEO-RED.
- As of 09/24/2018 thirty-three (33) executed SAA's are in place.

LMR SITES

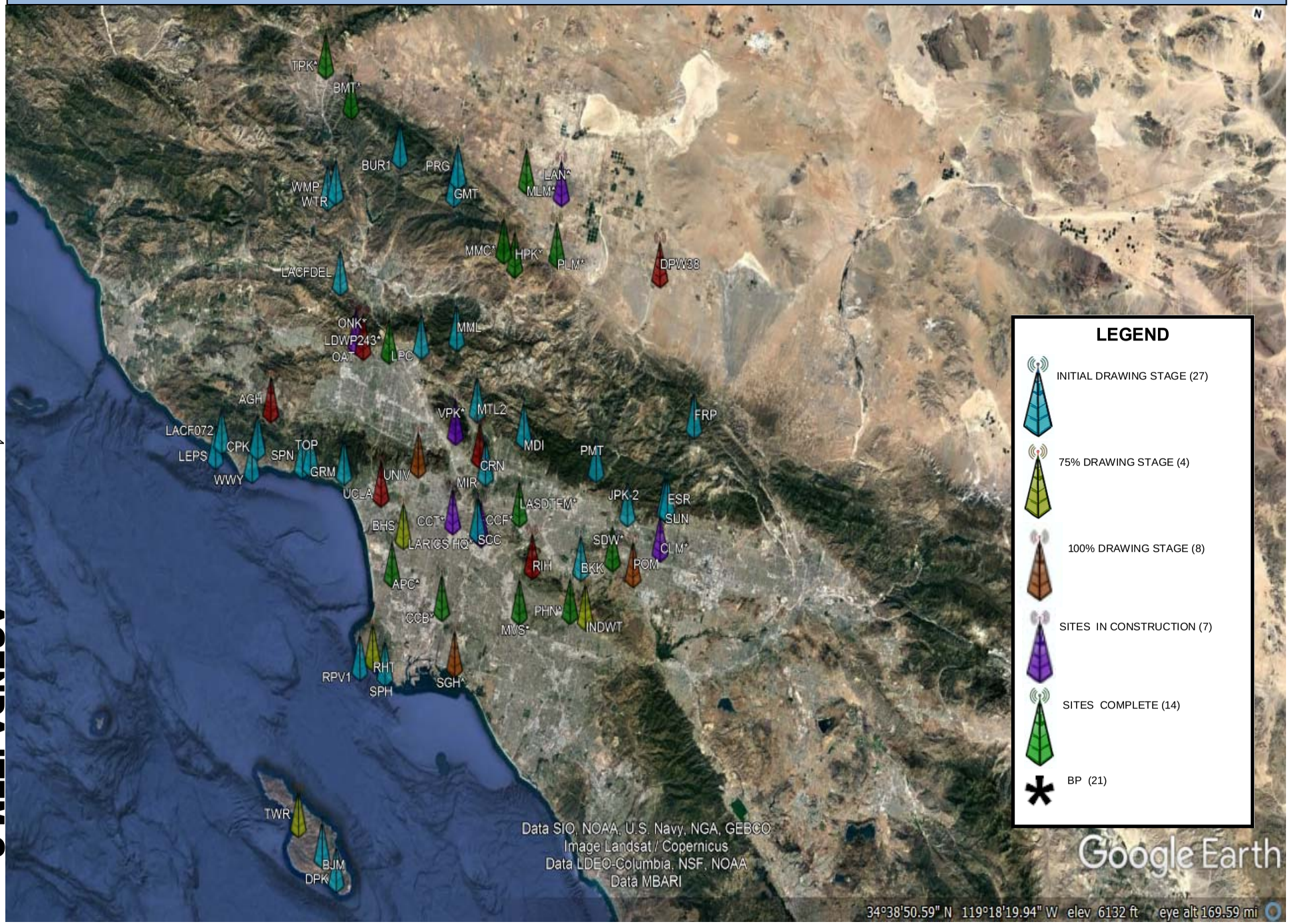
TPK*
BMT*
BUR1
PRG
WMP
WTR
GMT
LAN*
MLM*
MMC*
HPK*
PLM*
DPW38
LACFDEL
ONK*
LDWP243*
OAT
LPC
MML
AGH
VPK*
MTL2
FRP
LACF072
CPK
LEPS
SPN
TOP
WWY
GRM
UNIV
UCLA
MDI
PMT
CRN
MIR
LASDTEM*
JPK-2
ESR
SUN
BHS
CCT*
CCF*
LARCS HQ*
SCC
SDW*
CLM*
RIH
BKK
POM
APC*
CCB*
PHN*
MWS*
INDWT
RPV1
RHT
SPH
SGH*
TWR
BJM
DPK
LEGEND
INITIAL DRAWING STAGE (27)
75% DRAWING STAGE (4)
100% DRAWING STAGE (8)
SITES IN CONSTRUCTION (7)
SITES COMPLETE (14)
BP (21)
Data SIO, NOAA, U.S. Navy, NGA, GEBCO
Image Landsat / Copernicus
Data LDEO-Columbia, NSF, NOAA
Data MBARI
Google Earth
34°38'50.59" N 119°18'19.94" W elev 6132 ft eye alt 169.59 mi

LTE2 SITES

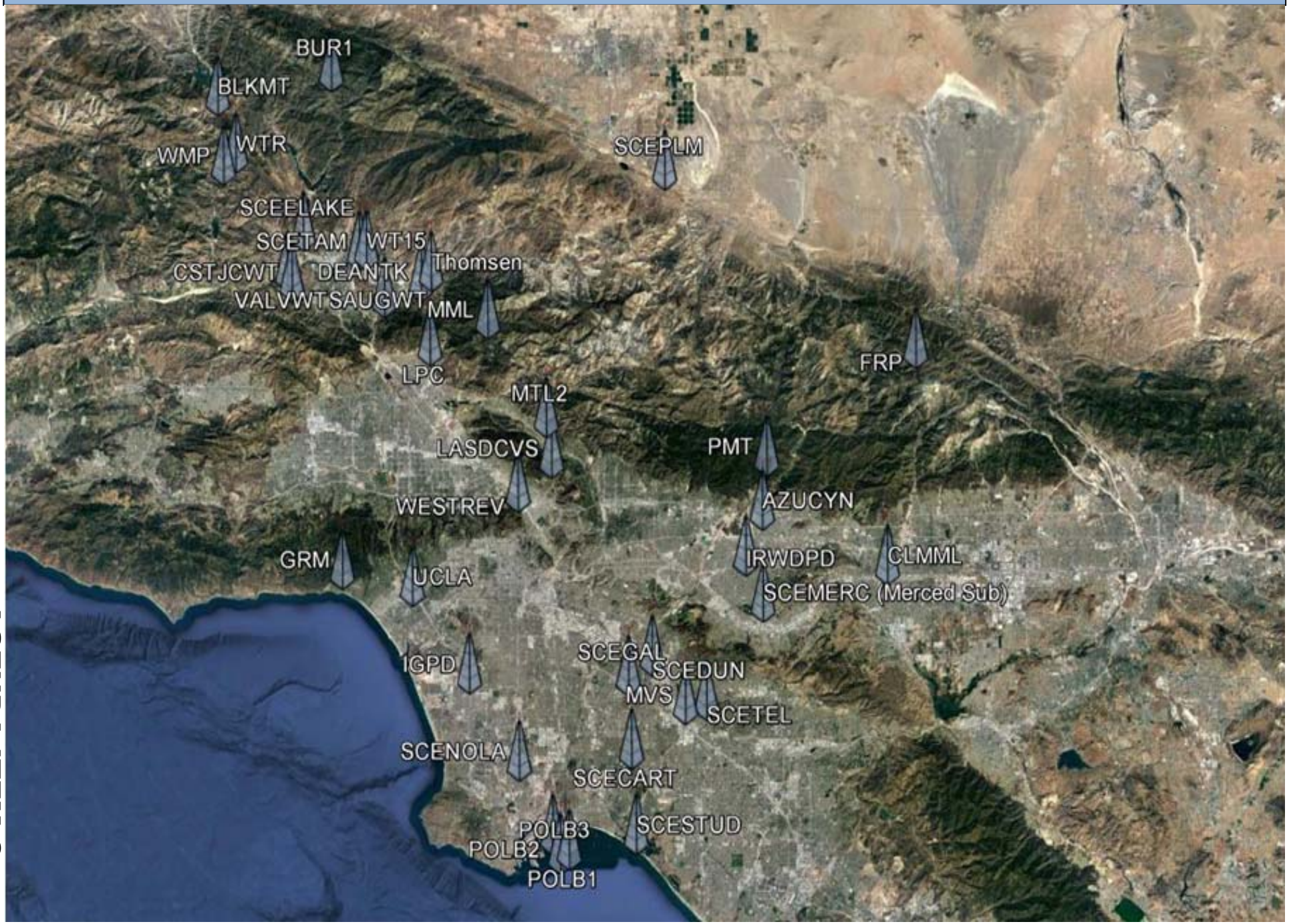
BUR1
BLKMT
WMP
WTR
SCEELAKE
SCETAM
WT15
CSTJCWT
DEANTK
Thomsen
VALVWT
SAUGWT
MML
LPC
SCEPLM
FRP
MTL2
LASDCVS
PMT
WESTREV
AZUCYN
GRM
UCLA
IRWDPD
CLMML
SCEMERC (Merced Sub)
IGPD
SCEGAL
SCEDUN
MVS
SCETEL
SCENOLA
SCECART
SCESTUD
POLB3
POLB2
POLB1

LMR Summary Schedule by Phase

Data Date 22-Sep-18

Summary

Activity ID	Activity Name	Original Duration	Remaining Duration	Duration % Complete	Start	Finish
Total		2001	1067	46.68%	09-Nov-15 A	25-Oct-22
LMR Phase 1		1319	385	70.81%	09-Nov-15 A	13-Mar-20
LMR Phase 2		967	463	52.12%	29-Sep-16 A	01-Jul-20
LMR Phase 3		911	407	55.32%	29-Sep-16 A	14-Apr-20
LMR Phase 4a (Site)		993	489	50.76%	29-Sep-16 A	06-Aug-20
LMR Phase 4b (Site)		1587	1067	32.77%	07-Aug-20	31-Dec-20
LMR System	**(SI & Warranty)**	365	365	0%	01-Jan-21	01-Jan-22

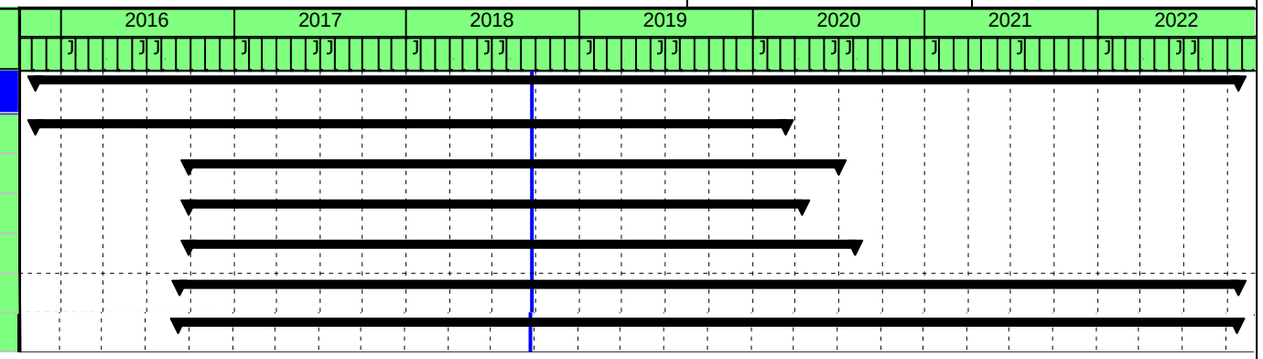

AGENDA ITEM C

LMR Site Schedules

Data Date 22-Sep-18
Page 1 of 10

Summary

Activity ID	Activity Name	Original Duration	Remaining Duration	Duration % Complete	Start	Finish
Total		2001	1067	46.68%	09-Nov-15 A	25-Oct-22
LA-RICS LMR Mirador_MIR		897	174	80.6%	16-Nov-15 A	23-May-19
Phase 1 - Mirador_MIR - System Design		801	78	90.26%	16-Nov-15 A	09-Jan-19
Phase 2 - Mirador_MIR - Site Construction and Modification		263	139	47.15%	27-Dec-17 A	19-Apr-19
Phase 3 - Mirador_MIR - Supply LMR System Components		236	96	59.32%	04-Dec-17 A	04-Feb-19
Phase 4a - Mirador_MIR - Site Installation		80	80	0%	01-Feb-19	23-May-19
LA-RICS LMR Airport Court House_APC		727	17	97.66%	03-Dec-15 A	16-Oct-18
Phase 1 - Airport Court House_APC - System Design		288	0	100%	03-Dec-15 A	27-Jan-17
Phase 2 - Airport Court House_APC - Site Construction and Modification		242	0	100%	09-Feb-17 A	19-Jan-18
Phase 3 - Airport Court House_APC - Supply LMR System Components		397	0	100%	03-Oct-16 A	16-Mar-18
Phase 4a - Airport Court House_APC - Site Installation		386	17	95.6%	14-Apr-17 A	16-Oct-18
LA-RICS LMR Agoura Hills_AGH		1093	159	85.45%	03-Dec-15 A	02-May-19
Phase 1 - Agoura Hills_AGH - System Design		1028	94	90.86%	03-Dec-15 A	31-Jan-19
Phase 2 - Agoura Hills_AGH - Site Construction and Modification		586	118	79.86%	20-Dec-16 A	03-Apr-19
Phase 3 - Agoura Hills_AGH - Supply LMR System Components		345	0	100%	16-Dec-16 A	16-Mar-18
Phase 4a - Agoura Hills_AGH - Site Installation		54	54	0%	18-Feb-19	02-May-19
LA-RICS LMR Burnt Peak 1_BUR1		1293	359	72.24%	03-Dec-15 A	06-Feb-20
Phase 1 - Burnt Peak 1_BUR1 - System Design		1132	198	82.51%	03-Dec-15 A	26-Jun-19
Phase 2 - Burnt Peak 1_BUR1 - Site Construction and Modification		411	256	37.71%	27-Dec-17 A	02-Jan-20
Phase 3 - Burnt Peak 1_BUR1 - Supply LMR System Components		299	159	46.82%	04-Dec-17 A	02-May-19
Phase 4a - Burnt Peak 1_BUR1 - Site Installation		122	122	0%	21-Aug-19	06-Feb-20
LA-RICS LMR UCLA_UCLA		1055	121	88.53%	03-Dec-15 A	11-Mar-19
Phase 1 - UCLA_UCLA - System Design		940	26	97.23%	03-Dec-15 A	29-Oct-18
Phase 2 - UCLA_UCLA - Site Construction and Modification		331	54	83.69%	21-Sep-17 A	11-Jan-19
Phase 3 - UCLA_UCLA - Supply LMR System Components		358	96	73.18%	15-Sep-17 A	04-Feb-19
Phase 4a - UCLA_UCLA - Site Installation		69	69	0%	05-Dec-18	11-Mar-19
LA-RICS LMR Milestone Schedules		1795	1067	40.56%	09-Nov-15 A	25-Oct-22
LMR Intermediate Milestones		1795	1067	40.56%	09-Nov-15 A	25-Oct-22
LMR USFS Permitting Process		277	162	41.52%	16-Apr-18 A	07-May-19
LA-RICS LMR Frost Peak_FRP		1290	356	72.4%	03-Dec-15 A	03-Feb-20
Phase 1 - Frost Peak_FRP - System Design		1132	198	82.51%	03-Dec-15 A	26-Jun-19
Phase 2 - Frost Peak_FRP - Site Construction and Modification		403	252	37.47%	27-Dec-17 A	27-Dec-19
Phase 3 - Frost Peak_FRP - Supply LMR System Components		299	159	46.82%	04-Dec-17 A	02-May-19

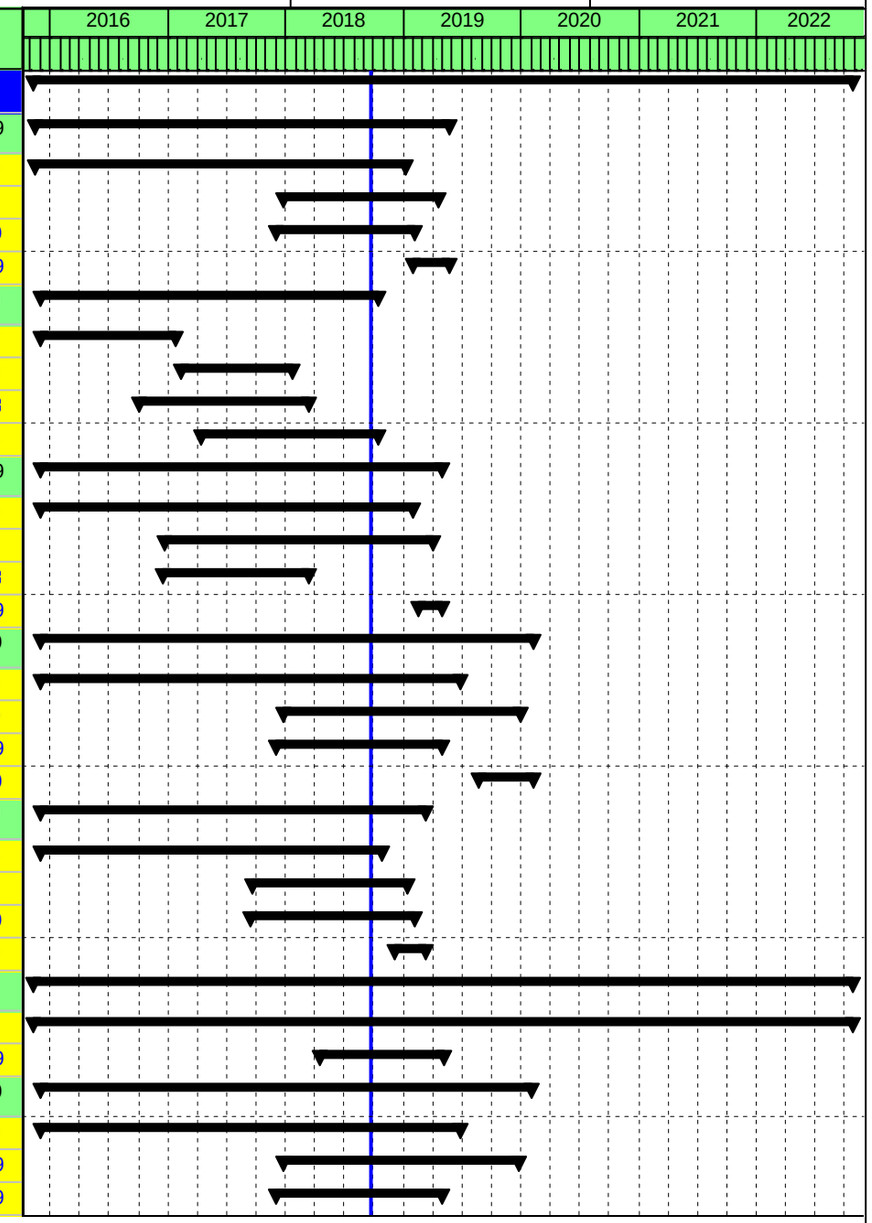

AGENDA ITEM C

LMR Site Schedules

Data Date 22-Sep-18
Page 2 of 10

Summary

Activity ID	Activity Name	Original Duration	Remaining Duration	Duration % Complete	Start	Finish
	Phase 4a - Frost Peak_FRP - Site Installation	127	127	0%	09-Aug-19	03-Feb-20
	LA-RICS LMR Grass Mountain_GMT	1332	398	70.12%	03-Dec-15 A	01-Apr-20
	Phase 1 - Grass Mountain_GMT - System Design	1132	198	82.51%	03-Dec-15 A	26-Jun-19
	Phase 2 - Grass Mountain_GMT - Site Construction and Modification	286	286	0%	24-Jan-19	27-Feb-20
	Phase 3 - Grass Mountain_GMT - Supply LMR System Components	416	113	72.84%	04-Dec-17 A	14-Oct-19
	Phase 4a - Grass Mountain_GMT - Site Installation	147	147	0%	10-Sep-19	01-Apr-20
	LA-RICS LMR Johnstone Peak_JPK2	1023	380	62.85%	03-Dec-15 A	06-Mar-20
	Phase 1 - Johnstone Peak_JPK2 - System Design	853	210	75.38%	03-Dec-15 A	12-Jul-19
	Phase 2 - Johnstone Peak_JPK2 - Site Construction and Modification	478	278	41.84%	27-Dec-17 A	03-Feb-20
	Phase 3 - Johnstone Peak_JPK2 - Supply LMR System Components	299	159	46.82%	04-Dec-17 A	02-May-19
	Phase 4a - Johnstone Peak_JPK2 - Site Installation	148	148	0%	14-Aug-19	06-Mar-20
	LA-RICS LMR Loop Canyon_LPC	1266	332	73.78%	03-Dec-15 A	31-Dec-19
	Phase 1 - Loop Canyon_LPC - System Design	1132	198	82.51%	03-Dec-15 A	26-Jun-19
	Phase 2 - Loop Canyon_LPC - Site Construction and Modification	216	216	0%	12-Jan-18 A	21-Nov-19
	Phase 3 - Loop Canyon_LPC - Supply LMR System Components	396	113	71.46%	04-Dec-17 A	14-Oct-19
	Phase 4a - Loop Canyon_LPC - Site Installation	81	81	0%	10-Sep-19	31-Dec-19
	LA-RICS LMR Mount Disappointment_MDI	1077	367	65.92%	03-Dec-15 A	18-Feb-20
	Phase 1 - Mount Disappointment_MDI - System Design	908	198	78.19%	03-Dec-15 A	26-Jun-19
	Phase 2 - Mount Disappointment_MDI - Site Construction and Modification	222	222	0%	11-Mar-19	14-Jan-20
	Phase 3 - Mount Disappointment_MDI - Supply LMR System Components	396	113	71.46%	04-Dec-17 A	14-Oct-19
	Phase 4a - Mount Disappointment_MDI - Site Installation	116	116	0%	10-Sep-19	18-Feb-20
	LA-RICS LMR Magic Mountain Link_MML	1297	363	72.01%	03-Dec-15 A	12-Feb-20
	Phase 1 - Magic Mountain Link_MML - System Design	1132	198	82.51%	03-Dec-15 A	26-Jun-19
	Phase 2 - Magic Mountain Link_MML - Site Construction and Modification	435	260	40.23%	27-Dec-17 A	08-Jan-20
	Phase 3 - Magic Mountain Link_MML - Supply LMR System Components	299	159	46.82%	04-Dec-17 A	02-May-19
	Phase 4a - Magic Mountain Link_MML - Site Installation	137	137	0%	06-Aug-19	12-Feb-20
	LA-RICS LMR Mount Lukens-2_MTL2	1252	318	74.6%	03-Dec-15 A	11-Dec-19
	Phase 1 - Mount Lukens-2_MTL2 - System Design	1144	210	81.64%	03-Dec-15 A	12-Jul-19
	Phase 2 - Mount Lukens-2_MTL2 - Site Construction and Modification	172	172	0%	11-Mar-19	05-Nov-19
	Phase 3 -Mount Lukens-2_MTL2 - Supply LMR System Components	396	113	71.46%	04-Dec-17 A	14-Oct-19
	Phase 4a - Mount Lukens-2_MTL2 - Site Installation	67	67	0%	10-Sep-19	11-Dec-19
	LA-RICS LMR Pine Mountain_PMT	1309	375	71.35%	03-Dec-15 A	28-Feb-20
	Phase 1 - Pine Mountain_PMT - System Design	1132	198	82.51%	03-Dec-15 A	26-Jun-19

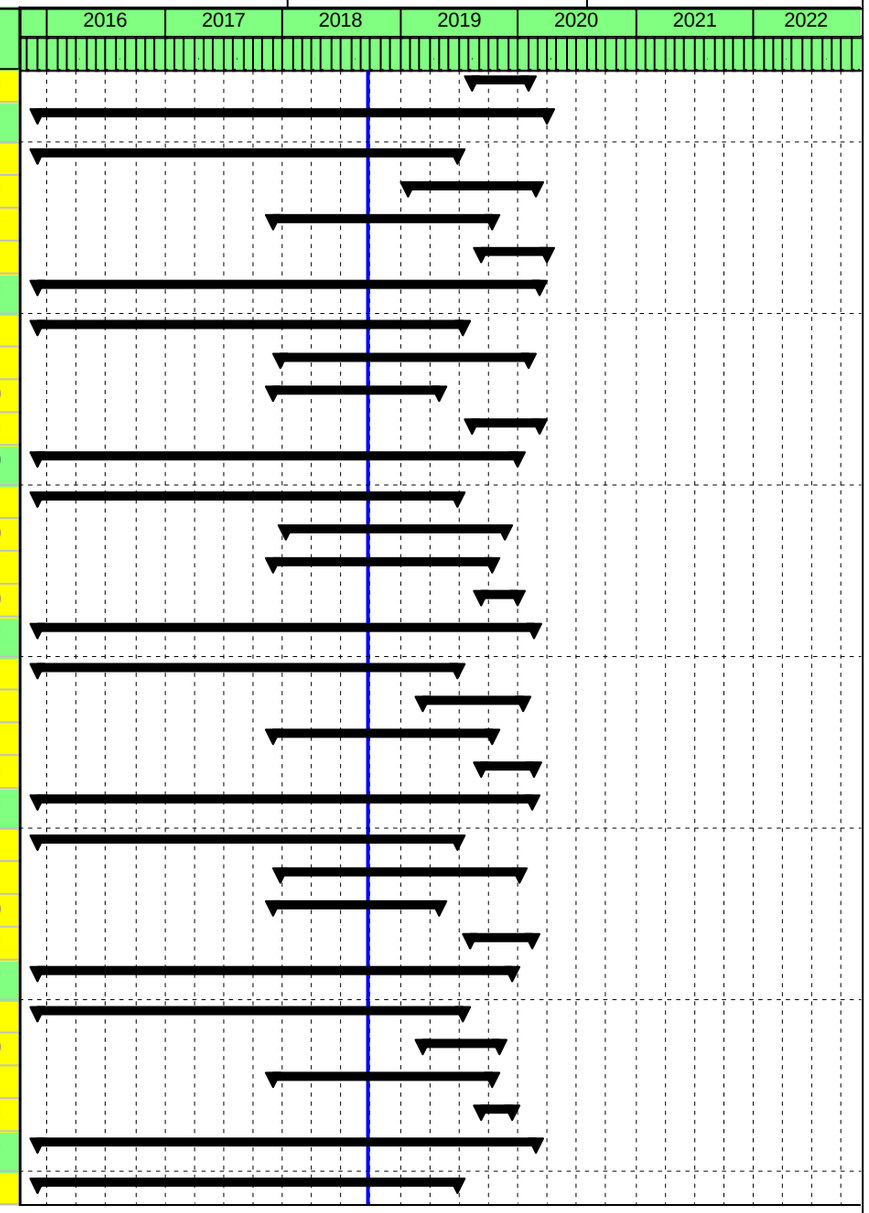

AGENDA ITEM C

LMR Site Schedules

Data Date 22-Sep-18
Page 3 of 10

Summary

Activity ID	Activity Name	Original Duration	Remaining Duration	Duration % Complete	Start	Finish
	Phase 2 - Pine Mountain_PMT - Site Construction and Modification	257	257	0%	01-Feb-19	27-Jan-20
	Phase 3 - Pine Mountain_PMT - Supply LMR System Components	416	113	72.84%	04-Dec-17 A	14-Oct-19
	Phase 4a - Pine Mountain_PMT - Site Installation	124	124	0%	10-Sep-19	28-Feb-20
	LA-RICS LMR Portal Ridge_PRG	1263	329	73.95%	03-Dec-15 A	26-Dec-19
	Phase 1 - Portal Ridge_PRG - System Design	1132	198	82.51%	03-Dec-15 A	26-Jun-19
	Phase 2 - Portal Ridge_PRG - Site Construction and Modification	213	213	0%	12-Jan-18 A	18-Nov-19
	Phase 3 - Portal Ridge_PRG - Supply LMR System Components	396	113	71.46%	04-Dec-17 A	14-Oct-19
	Phase 4a - Portal Ridge_PRG - Site Installation	78	78	0%	10-Sep-19	26-Dec-19
	LA-RICS LMR San Pedro Hill_SPH	962	353	63.31%	02-May-16 A	29-Jan-20
	Phase 1 - San Pedro Hill_SPH - System Design	838	229	72.67%	02-May-16 A	08-Aug-19
	Phase 2 - San Pedro Hill_SPH - Site Construction and Modification	209	209	0%	27-Mar-19	13-Jan-20
	Phase 3 - San Pedro Hill_SPH - Supply LMR System Components	426	112	73.71%	04-Dec-17 A	25-Nov-19
	Phase 4a - San Pedro Hill_SPH - Site Installation	66	66	0%	30-Oct-19	29-Jan-20
	LA-RICS LMR East Sunset Ridge_ESR	1235	301	75.63%	04-Apr-17 A	18-Nov-19
	Phase 1 - East Sunset Ridge_ESR - System Design	1132	198	82.51%	04-Apr-17 A	26-Jun-19
	Phase 2 - East Sunset Ridge_ESR - Site Construction and Modification	202	202	0%	24-Jan-19	01-Nov-19
	Phase 3 - East Sunset Ridge_ESR - Supply LMR System Components	344	120	65.12%	04-Dec-17 A	01-Aug-19
	Phase 4a - East Sunset Ridge_ESR - Site Installation	139	139	0%	08-May-19	18-Nov-19
	LA-RICS LMR Whitaker Middle Peak_WMP	1306	372	71.52%	03-Dec-15 A	25-Feb-20
	Phase 1 - Whitaker Middle Peak_WMP - System Design	1132	198	82.51%	03-Dec-15 A	26-Jun-19
	Phase 2 - Whitaker Middle Peak_WMP - Site Construction and Modification	260	260	0%	24-Jan-19	22-Jan-20
	Phase 3 - Whitaker Middle Peak_WMP - Supply LMR System Components	396	113	71.46%	04-Dec-17 A	14-Oct-19
	Phase 4a - Whitaker Middle Peak_WMP - Site Installation	121	121	0%	10-Sep-19	25-Feb-20
	LA-RICS LMR Whitaker Ridge_WTR	1316	382	70.97%	03-Dec-15 A	10-Mar-20
	Phase 1 - Whitaker Ridge_WTR - System Design	1132	198	82.51%	03-Dec-15 A	26-Jun-19
	Phase 2 - Whitaker Ridge_WTR - Site Construction and Modification	238	238	0%	11-Mar-19	05-Feb-20
	Phase 3 - Whitaker Ridge_WTR - Supply LMR System Components	396	113	71.46%	04-Dec-17 A	14-Oct-19
	Phase 4a - Whitaker Ridge_WTR - Site Installation	131	131	0%	10-Sep-19	10-Mar-20
	LA-RICS LMR Bald Mountain_BMT	788	61	92.26%	16-Nov-15 A	21-Dec-18
	Phase 1 - Bald Mountain_BMT - System Design	286	0	100%	16-Nov-15 A	06-Jan-17
	Phase 2 - Bald Mountain_BMT - Site Construction and Modification	544	46	91.54%	13-Oct-16 A	30-Nov-18
	Phase 3 - Bald Mountain_BMT - Supply LMR System Components	392	0	100%	03-Oct-16 A	16-Mar-18
	Phase 4a - Bald Mountain_BMT - Site Installation	468	20	95.73%	27-Feb-17 A	21-Dec-18

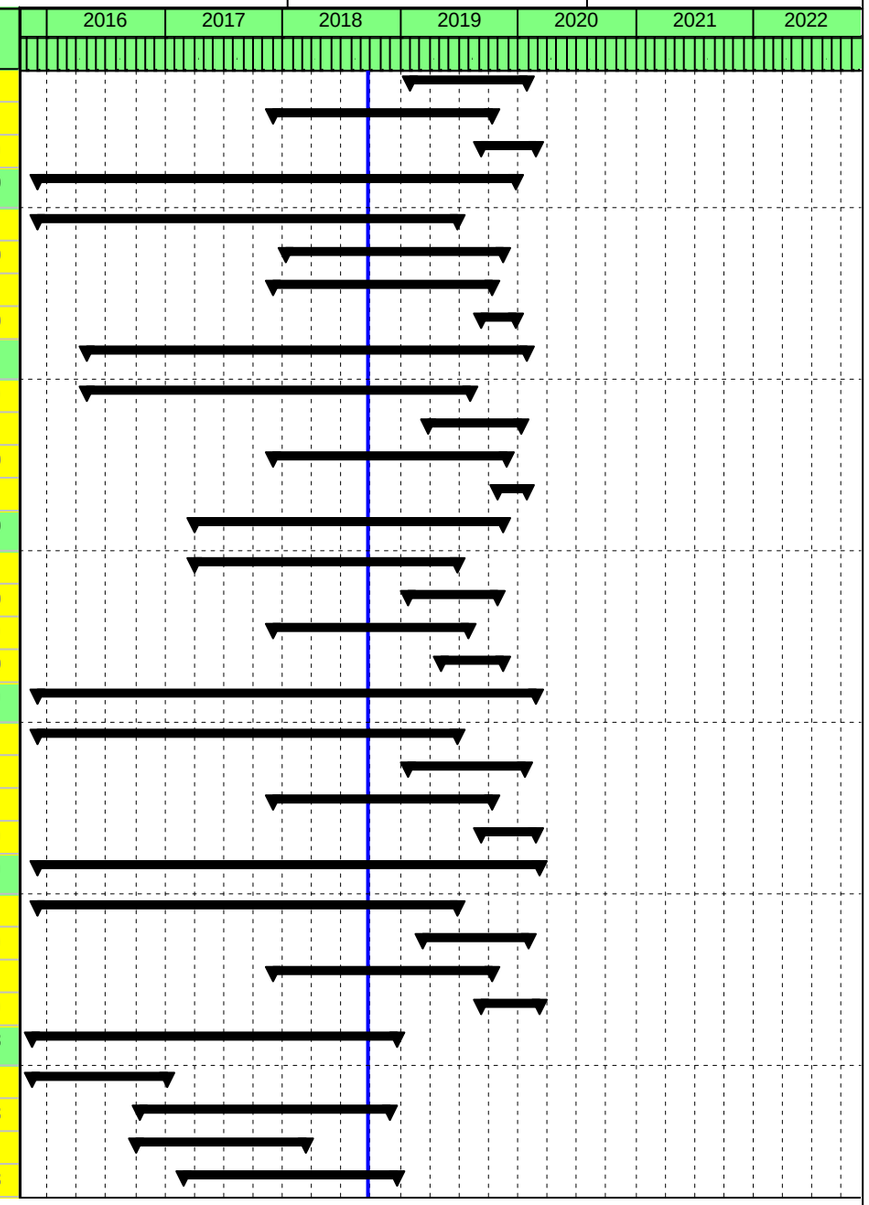

AGENDA ITEM C

LMR Site Schedules

Data Date 22-Sep-18

Summary

Activity ID	Activity Name	Original Duration	Remaining Duration	Duration % Complete	Start	Finish
	LA-RICS LMR Cerro Negro_CRN	1091	157	85.61%	03-Dec-15 A	30-Apr-19
	Phase 1 - Cerro Negro_CRN - System Design	953	19	98.01%	03-Dec-15 A	18-Oct-18
	Phase 2 - Cerro Negro_CRN - Site Construction and Modification	536	119	77.8%	28-Feb-17 A	27-Mar-19
	Phase 3 - Cerro Negro_CRN - Supply LMR System Components	345	0	100%	16-Dec-16 A	16-Mar-18
	Phase 4a - Cerro Negro_CRN - Site Installation	88	88	0%	28-Dec-18	30-Apr-19
	LA-RICS LMR Del Valle Training_LACFDEL	1107	173	84.37%	03-Dec-15 A	22-May-19
	Phase 1 - Del Valle Training_LACFDEL - System Design	1028	94	90.86%	03-Dec-15 A	31-Jan-19
	Phase 2 - Del Valle Training_LACFDEL - Site Construction and Modification	404	153	62.13%	16-Dec-16 A	24-Apr-19
	Phase 3 - Del Valle Training_LACFDEL - Supply LMR System Components	236	96	59.32%	04-Dec-17 A	04-Feb-19
	Phase 4a - Del Valle Training_LACFDEL - Site Installation	90	90	0%	17-Jan-19	22-May-19
	LA-RICS LMR Universal Studios_UNIV	1064	130	87.78%	01-Jun-16 A	22-Mar-19
	Phase 1 - Universal Studios_UNIV - System Design	963	29	96.99%	01-Jun-16 A	01-Nov-18
	Phase 2 - Universal Studios_UNIV - Site Construction and Modification	401	127	68.33%	17-Aug-17 A	20-Mar-19
	Phase 3 - Universal Studios_UNIV - Supply LMR System Components	358	96	73.18%	26-Jul-17 A	04-Feb-19
	Phase 4a - Universal Studios_UNIV - Site Installation	80	80	0%	03-Dec-18	22-Mar-19
	LA-RICS LMR Industry Water Tank_INDWT	656	215	67.23%	12-Dec-16 A	19-Jul-19
	Phase 1 - Industry Water Tank_INDWT - System Design	553	112	79.75%	12-Dec-16 A	26-Feb-19
	Phase 2 - Industry Water Tank_INDWT - Site Construction and Modification	501	181	63.87%	12-Jul-17 A	20-Jun-19
	Phase 3 - Industry Water Tank_INDWT - Supply LMR System Components	372	96	74.19%	15-Sep-17 A	22-Feb-19
	Phase 4a - Industry Water Tank_INDWT - Site Installation	91	91	0%	15-Mar-19	19-Jul-19
	LA-RICS LMR Compton Court Building_CCB	735	25	96.6%	03-Dec-15 A	26-Oct-18
	Phase 1 - Compton Court Building_CCB - System Design	338	0	100%	03-Dec-15 A	18-Apr-17 A
	Phase 2 - Compton Court Building_CCB - Site Construction and Modification	502	8	98.41%	13-Oct-16 A	03-Oct-18
	Phase 3 - Compton Court Building_CCB - Supply LMR System Components	397	0	100%	03-Oct-16 A	16-Mar-18
	Phase 4a - Compton Court Building_CCB - Site Installation	363	21	94.21%	30-May-17 A	26-Oct-18
	LA-RICS LMR Claremont_CLM	737	20	97.29%	03-Dec-15 A	19-Oct-18
	Phase 1 - Claremont_CLM - System Design	586	0	100%	03-Dec-15 A	19-Apr-18 A
	Phase 2 - Claremont_CLM - Site Construction and Modification	215	0	100%	08-Aug-17 A	15-Jun-18
	Phase 3 - Claremont_CLM - Supply LMR System Components	489	0	100%	30-Nov-16 A	02-Oct-18 A
	Phase 4a - Claremont_CLM - Site Installation	100	20	80%	11-Apr-18 A	19-Oct-18
	LA-RICS LMR BKK Landfill_BKK	1090	156	85.69%	03-Dec-15 A	29-Apr-19
	Phase 1 - BKK Landfill_BKK - System Design	1003	69	93.12%	03-Dec-15 A	27-Dec-18
	Phase 2 - BKK Landfill_BKK - Site Construction and Modification	459	120	73.86%	13-Jul-17 A	19-Apr-19

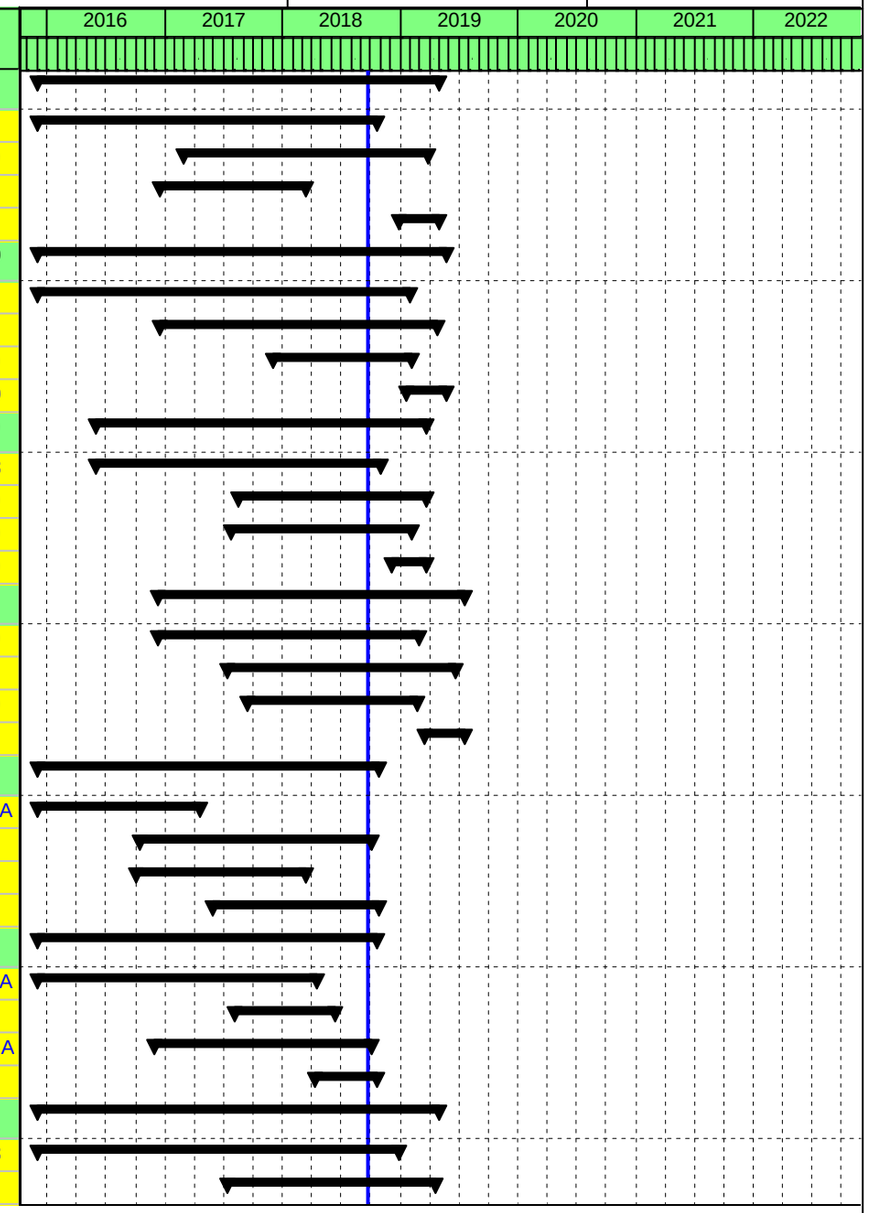

AGENDA ITEM C

LMR Site Schedules

Data Date 22-Sep-18
Page 5 of 10

Summary

Activity ID	Activity Name	Original Duration	Remaining Duration	Duration % Complete	Start	Finish
	Phase 3 - BKK Landfill_BKK - Supply LMR System Components	362	96	73.48%	26-Jul-17 A	04-Feb-19
	Phase 4a - BKK Landfill_BKK - Site Installation	74	74	0%	16-Jan-19	29-Apr-19
	LA-RICS LMR LA-RICS Headquarters Building_LARICSHQ	629	20	96.82%	25-May-16 A	19-Oct-18
	Phase 1 - LA-RICS Headquarters Building_LARICSHQ - System Design	587	0	100%	25-May-16 A	24-Aug-18
	Phase 2 - LA-RICS Headquarters Building_LARICSHQ - Site Construction and	305	16	94.75%	08-Aug-17 A	15-Oct-18
	Phase 3 - LA-RICS Headquarters Building_LARICSHQ - Supply LMR System (	168	0	100%	04-Dec-17 A	14-Aug-18
	Phase 4a - LA-RICS Headquarters Building_LARICSHQ - Site Installation	38	16	57.89%	29-Aug-18 A	19-Oct-18
	LA-RICS LMR Winding Way_WWY	1013	409	59.62%	06-May-16 A	16-Apr-20
	Phase 1 - Winding Way_WWY - System Design	886	282	68.17%	06-May-16 A	22-Oct-19
	Phase 2 - Winding Way_WWY - Site Construction and Modification	234	234	0%	23-Apr-19	13-Mar-20
	Phase 3 - Winding Way_WWY - Supply LMR System Components	473	117	75.26%	04-Dec-17 A	29-Jan-20
	Phase 4a - Winding Way_WWY - Site Installation	85	85	0%	20-Dec-19	16-Apr-20
	LA-RICS LMR Mira Loma Facility_MLM	789	79	89.99%	03-Dec-15 A	10-Jan-19
	Phase 1 - Mira Loma Facility_MLM - System Design	356	0	100%	03-Dec-15 A	08-May-17
	Phase 2 - Mira Loma Facility_MLM - Site Construction and Modification	518	58	88.8%	05-Dec-16 A	12-Dec-18
	Phase 3 - Mira Loma Facility_MLM - Supply LMR System Components	454	0	100%	12-Dec-16 A	24-Sep-18
	Phase 4a - Mira Loma Facility_MLM - Site Installation	370	23	93.78%	04-Aug-17 A	10-Jan-19
	LA-RICS LMR Rolling Hills Transmit_RHT	1011	301	70.23%	03-Dec-15 A	18-Nov-19
	Phase 1 - Rolling Hills Transmit_RHT - System Design	889	179	79.87%	03-Dec-15 A	30-May-19
	Phase 2 - Rolling Hills Transmit_RHT - Site Construction and Modification	536	218	59.33%	12-Jul-17 A	24-Jul-19
	Phase 3 - Rolling Hills Transmit_RHT - Supply LMR System Components	411	271	34.06%	04-Dec-17 A	07-Oct-19
	Phase 4a - Rolling Hills Transmit_RHT - Site Installation	159	159	0%	10-Apr-19	18-Nov-19
	LA-RICS LMR Criminal Courts Building_CCT	773	63	91.85%	03-Dec-15 A	19-Dec-18
	Phase 1 - Criminal Courts Building_CCT - System Design	660	0	100%	03-Dec-15 A	11-Jul-18 A
	Phase 2 - Criminal Courts Building_CCT - Site Construction and Modification	552	58	89.49%	13-Oct-16 A	12-Dec-18
	Phase 3 - Criminal Courts Building_CCT - Supply LMR System Components	397	0	100%	03-Oct-16 A	16-Mar-18
	Phase 4a - Criminal Courts Building_CCT - Site Installation	394	61	84.52%	08-Jun-17 A	19-Dec-18
	LA-RICS LMR Topanga Peak_TOP	1214	280	76.94%	03-Dec-15 A	18-Oct-19
	Phase 1 - Topanga Peak_TOP - System Design	1097	163	85.14%	03-Dec-15 A	08-May-19
	Phase 2 - Topanga Peak_TOP - Site Construction and Modification	411	179	56.45%	13-Jul-17 A	18-Sep-19
	Phase 3 - Topanga Peak_TOP - Supply LMR System Components	361	241	33.24%	04-Dec-17 A	26-Aug-19
	Phase 4a - Topanga Peak_TOP - Site Installation	61	61	0%	26-Jul-19	18-Oct-19
	LA-RICS LMR County FS 72_LACF072	1423	489	65.64%	03-Dec-15 A	06-Aug-20

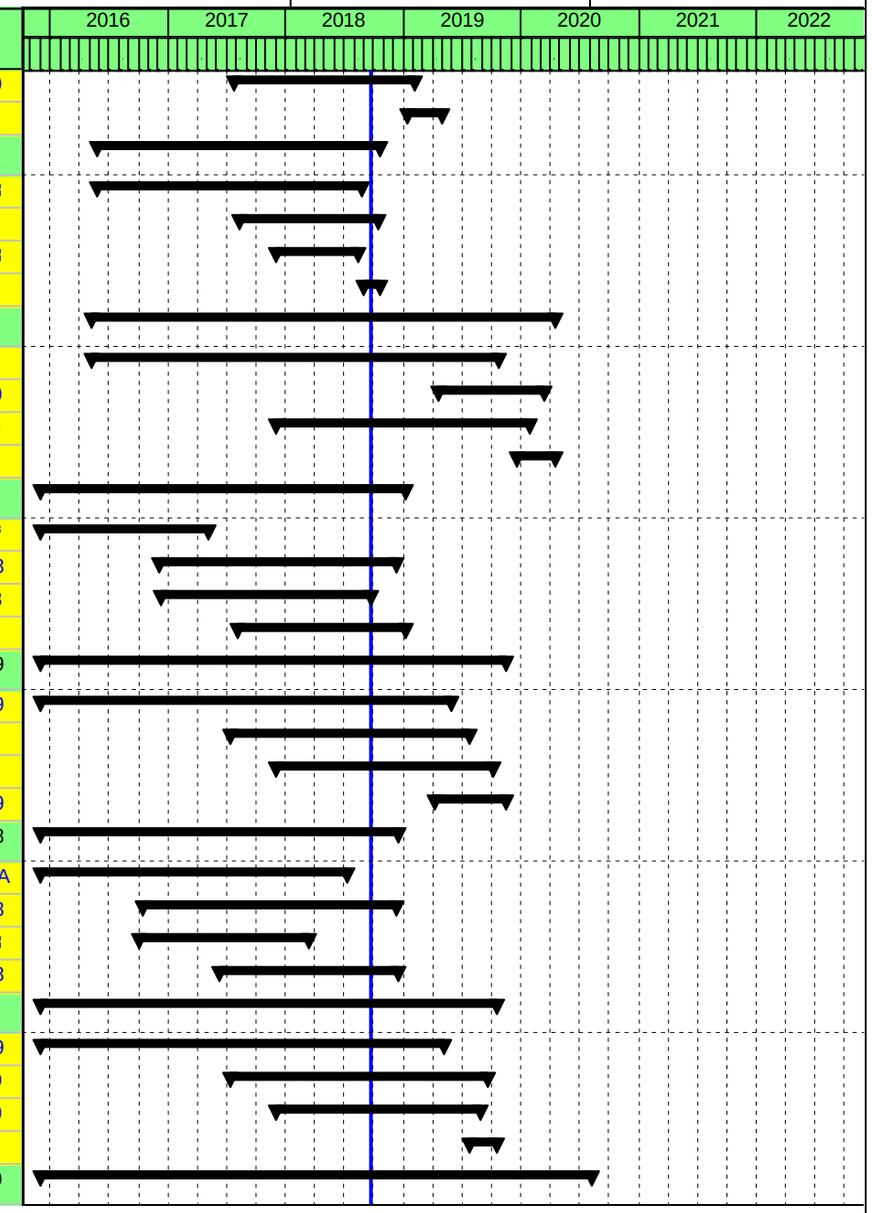

AGENDA ITEM C

LMR Site Schedules

Data Date 22-Sep-18

Summary

Activity ID	Activity Name	Original Duration	Remaining Duration	Duration % Complete	Start	Finish
	Phase 1 - County FS 72_LACF072 - System Design	1319	385	70.81%	03-Dec-15 A	13-Mar-20
	Phase 2 - County FS 72_LACF072 - Site Construction and Modification	648	303	53.24%	27-Dec-17 A	01-Jul-20
	Phase 3 - County FS 72_LACF072 - Supply LMR System Components	299	159	46.82%	04-Dec-17 A	02-May-19
	Phase 4a - County FS 72_LACF072 - Site Installation	89	89	0%	06-Apr-20	06-Aug-20
	LA-RICS LMR Saddle Peak_SPN	1283	349	72.8%	03-Dec-15 A	23-Jan-20
	Phase 1 - Saddle Peak_SPN - System Design	1163	229	80.31%	03-Dec-15 A	08-Aug-19
	Phase 2 - Saddle Peak_SPN - Site Construction and Modification	316	178	43.67%	12-Jan-18 A	16-Dec-19
	Phase 3 - Saddle Peak_SPN - Supply LMR System Components	426	112	73.71%	04-Dec-17 A	25-Nov-19
	Phase 4a - Saddle Peak_SPN - Site Installation	68	68	0%	22-Oct-19	23-Jan-20
	LA-RICS LMR FCCF_FCCF	743	15	97.98%	09-Nov-15 A	12-Oct-18
	Phase 1- FCCF_FCCF - System Design	318	0	100%	09-Nov-15 A	10-Feb-17
	Phase 2 - FCCF_FCCF - Site Construction and Modification	349	0	100%	13-Oct-16 A	23-Feb-18
	Phase 3 - FCCF_FCCF - Supply LMR System Components	382	0	100%	03-Oct-16 A	16-Mar-18
	Phase 4a - FCCF_FCCF - Site Installation	395	15	96.2%	27-Feb-17 A	12-Oct-18
	LA-RICS LMR Castro Peak_CPK	1040	330	68.27%	03-Dec-15 A	27-Dec-19
	Phase 1 - Castro Peak_CPK - System Design	924	214	76.84%	03-Dec-15 A	18-Jul-19
	Phase 2 - Castro Peak_CPK - Site Construction and Modification	612	223	63.56%	23-Jun-17 A	19-Nov-19
	Phase 3 - Castro Peak_CPK - Supply LMR System Components	299	159	46.82%	04-Dec-17 A	02-May-19
	Phase 4a - Castro Peak_CPK - Site Installation	97	97	0%	15-Aug-19	27-Dec-19
	LA-RICS LMR Pomona Court House_POM	1055	121	88.53%	03-Dec-15 A	11-Mar-19
	Phase 1 - Pomona Court House_POM - System Design	854	8	99.06%	03-Dec-15 A	03-Oct-18
	Phase 2 - Pomona Court House_POM - Site Construction and Modification	358	102	71.51%	21-Sep-17 A	12-Feb-19
	Phase 3 - Pomona Court House_POM - Supply LMR System Components	362	96	73.48%	26-Jul-17 A	04-Feb-19
	Phase 4a - Pomona Court House_POM - Site Installation	68	68	0%	06-Dec-18	11-Mar-19
	LA-RICS LMR Mount McDill_MMC	1119	185	83.47%	03-Dec-15 A	07-Jun-19
	Phase 1 - Mount McDill_MMC - System Design	999	1	99.9%	03-Dec-15 A	21-Dec-18
	Phase 2 - Mount McDill_MMC - Site Construction and Modification	484	48	90.08%	04-Dec-16 A	28-Nov-18
	Phase 3 - Mount McDill_MMC - Supply LMR System Components	613	92	84.99%	01-Dec-16 A	02-May-19
	Phase 4a - Mount McDill_MMC - Site Installation	354	132	62.71%	30-Jan-18 A	07-Jun-19
	LA-RICS LMR Hauser Peak_HPK	1119	180	83.91%	16-Nov-15 A	07-Jun-19
	Phase 1 - Hauser Peak_HPK - System Design	999	1	99.9%	16-Nov-15 A	21-Dec-18
	Phase 2 - Hauser Peak_HPK - Site Construction and Modification	550	41	92.55%	13-Oct-16 A	26-Nov-18
	Phase 3 - Hauser Peak_HPK - Supply LMR System Components	656	92	85.98%	03-Oct-16 A	02-May-19
	Phase 4a - Hauser Peak_HPK - Site Installation	588	139	76.36%	27-Feb-17 A	07-Jun-19

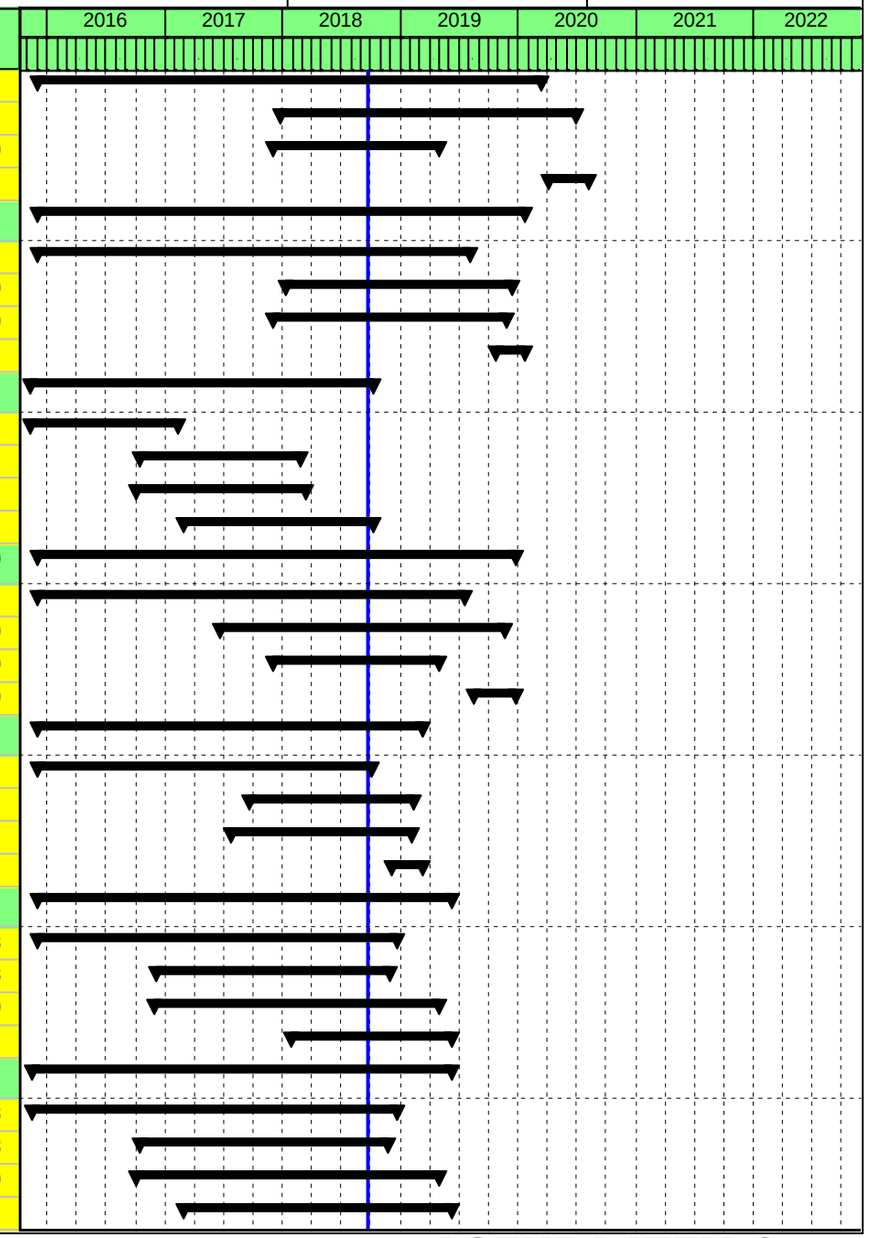

AGENDA ITEM C

LMR Site Schedules

Data Date 22-Sep-18
Page 7 of 10

Summary

Activity ID	Activity Name	Original Duration	Remaining Duration	Duration % Complete	Start	Finish
	LA-RICS LMR Monte Vista_MVS	889	25	97.19%	03-Dec-15 A	30-Oct-18
	Phase 1 - Monte Vista_MVS - System Design	627	0	100%	03-Dec-15 A	21-Nov-17
	Phase 2 - Monte Vista_MVS- Site Construction and Modification	415	21	94.94%	20-Dec-16 A	30-Oct-18
	Phase 3 - Monte Vista_MVS - Supply LMR System Components	345	0	100%	16-Dec-16 A	16-Mar-18
	Phase 4a - Monte Vista_MVS - Site Installation	243	25	89.71%	20-Nov-17 A	30-Oct-18
	LA-RICS LMR Rio Hondo_RIH	1075	365	66.05%	03-Dec-15 A	14-Feb-20
	Phase 1 - Rio Hondo_RIH - System Design	955	245	74.35%	03-Dec-15 A	30-Aug-19
	Phase 2 - Rio Hondo_RIH - Site Construction and Modification	360	340	5.56%	12-Jan-18 A	10-Jan-20
	Phase 3 - Rio Hondo_RIH - Supply LMR System Components	318	198	37.74%	04-Dec-17 A	26-Jun-19
	Phase 4a - Rio Hondo_RIH - Site Installation	99	99	0%	01-Oct-19	14-Feb-20
	LA-RICS LMR System Implementation	1587	1067	32.77%	07-Sep-16 A	25-Oct-22
	Phase 4b - LMR System Implementation	1587	1067	32.77%	07-Sep-16 A	25-Oct-22
	LA-RICS LMR LA County DPW Water Tank_DPW38	1073	139	87.05%	14-Jan-16 A	04-Apr-19
	Phase 1 - LA County DPW Water Tank_DPW38 - System Design	1022	88	91.39%	14-Jan-16 A	23-Jan-19
	Phase 2 - LA County DPW Water Tank_DPW38 - Site Construction and Modific	441	122	72.34%	27-Dec-16 A	26-Mar-19
	Phase 3 - LA County DPW Water Tank_DPW38 - Supply LMR System Compon	358	96	73.18%	15-Sep-17 A	04-Feb-19
	Phase 4a - LA County DPW Water Tank_DPW38 - Site Installation	99	99	0%	19-Nov-18	04-Apr-19
	LA-RICS LMR Oat Mountain_OAT	856	146	82.94%	03-Dec-15 A	15-Apr-19
	Phase 1 - Oat Mountain_OAT - System Design	808	98	87.87%	03-Dec-15 A	06-Feb-19
	Phase 2 - Oat Mountain_OAT - Site Construction and Modification	536	124	76.87%	09-Feb-17 A	28-Mar-19
	Phase 3 - Oat Mountain_OAT - Supply LMR System Components	450	0	100%	16-Dec-16 A	24-Sep-18
	Phase 4a - Oat Mountain_OAT - Site Installation	113	113	0%	08-Nov-18	15-Apr-19
	LA-RICS LMR Signal Hill_SGH	810	100	87.65%	03-Dec-15 A	08-Feb-19
	Phase 1 - Signal Hill_SGH - System Design	690	0	100%	03-Dec-15 A	24-Aug-18
	Phase 2 - Signal Hill_SGH - Site Construction and Modification	398	80	79.9%	23-Jun-17 A	11-Jan-19
	Phase 3 - Signal Hill_SGH - Supply LMR System Components	362	96	73.48%	26-Jul-17 A	04-Feb-19
	Phase 4a - Signal Hill_SGH- Site Installation	48	48	0%	05-Dec-18	08-Feb-19
	LA-RICS LMR LA Sheriff Temple Station_LASDTEM	954	20	97.9%	03-Dec-15 A	19-Oct-18
	Phase 1 - LA Sheriff Temple Station_LASDTEM - System Design	616	0	100%	03-Dec-15 A	28-Apr-17 A
	Phase 2 - LA Sheriff Temple Station_LASDTEM - Site Construction and Modific	361	0	100%	13-Oct-16 A	20-Mar-18
	Phase 3 - LA Sheriff Temple Station_LASDTEM - Supply LMR System Compor	392	0	100%	03-Oct-16 A	16-Mar-18
	Phase 4a - LA Sheriff Temple Station_LASDTEM - Site Installation	387	20	94.83%	18-Apr-17 A	19-Oct-18
	LA-RICS LMR Lancaster_LAN	456	25	94.52%	17-Jan-17 A	26-Oct-18

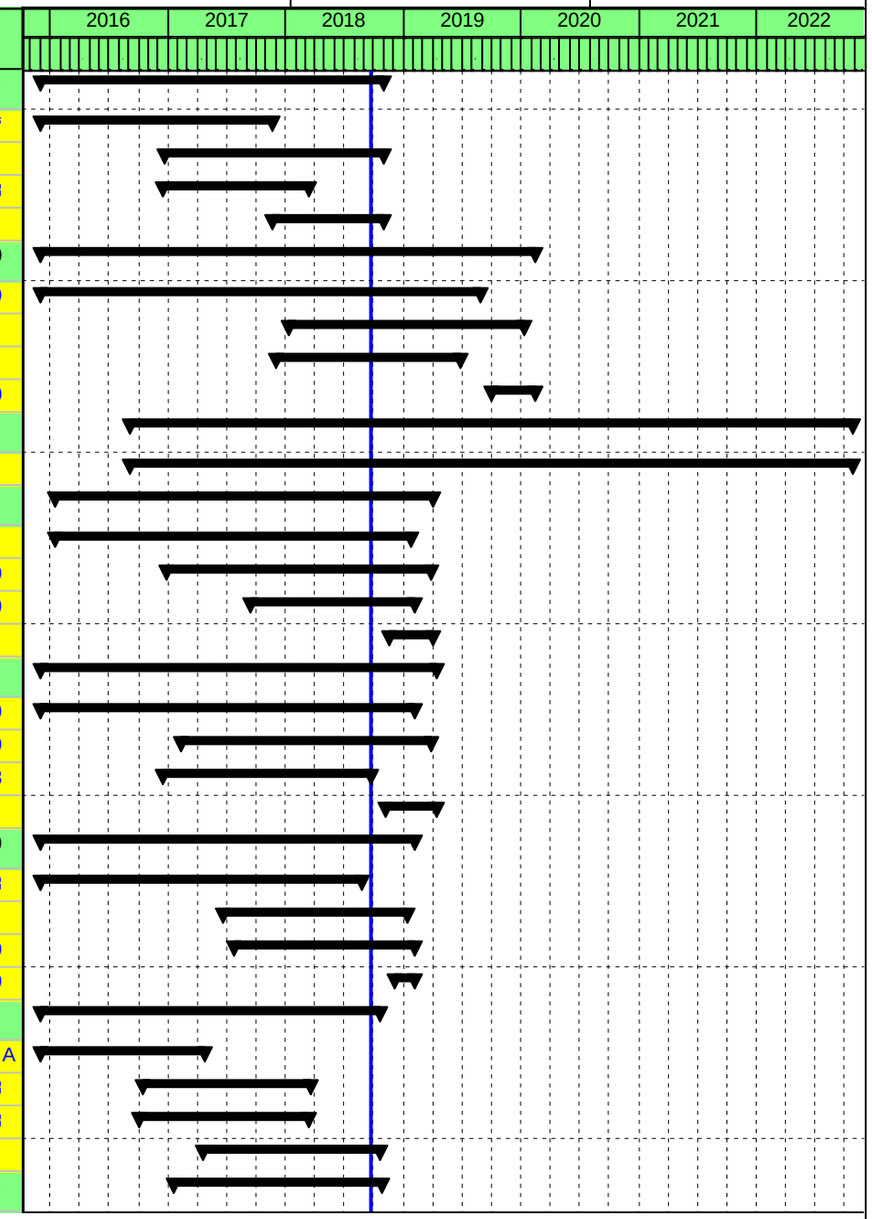

AGENDA ITEM C

LMR Site Schedules

Data Date 22-Sep-18

Summary

Activity ID	Activity Name	Original Duration	Remaining Duration	Duration % Complete	Start	Finish
	Phase 1 - Lancaster_LAN - System Design	427	0	100%	17-Jan-17 A	05-Sep-18
	Phase 2 - Lancaster_LAN - Site Construction and Modification	79	20	74.68%	12-Jan-18 A	19-Oct-18
	Phase 3 - Lancaster_LAN - Supply LMR System Components	147	7	95.24%	04-Dec-17 A	02-Oct-18
	Phase 4a - Lancaster_LAN - Site Installation	35	23	34.29%	10-Sep-18 A	26-Oct-18
	LA-RICS LMR LDWP243_Sylmar_LDWP243	949	15	98.42%	03-Dec-15 A	12-Oct-18
	Phase 1 - LDWP243 Sylmar _LDWP243 - System Design	500	0	100%	03-Dec-15 A	06-Jan-17
	Phase 2 - LDWP243 Sylmar _LDWP243 - Site Construction and Modification	333	0	100%	13-Oct-16 A	02-Feb-18
	Phase 3 - LDWP243 Sylmar _LDWP243 - Supply LMR System Components	397	0	100%	03-Oct-16 A	16-Mar-18
	Phase 4a - LDWP243 Sylmar _LDWP243 - Site Installation	425	15	96.47%	16-Feb-17 A	12-Oct-18
	LA-RICS LMR Oat Mountain Nike_ONK	894	184	79.42%	03-Dec-15 A	06-Jun-19
	Phase 1 - Oat Mountain Nike_ONK - System Design	774	0	100%	03-Dec-15 A	21-Dec-18
	Phase 2 - Oat Mountain Nike_ONK - Site Construction and Modification	464	54	88.36%	20-Dec-16 A	06-Dec-18
	Phase 3 - Oat Mountain Nike_ONK - Supply LMR System Components	608	94	84.54%	16-Dec-16 A	01-May-19
	Phase 4a - Oat Mountain Nike_ONK - Site Installation	360	184	48.89%	19-Jan-18 A	06-Jun-19
	LA-RICS LMR Baldwin Hills County_BHS	1113	179	83.92%	03-Dec-15 A	30-May-19
	Phase 1 - Baldwin Hills County_BHS - System Design	1028	94	90.86%	03-Dec-15 A	31-Jan-19
	Phase 2 - Baldwin Hills County_BHS - Site Construction and Modification	406	122	69.95%	13-Sep-17 A	25-Apr-19
	Phase 3 - Baldwin Hills County_BHS - Supply LMR System Components	358	96	73.18%	15-Sep-17 A	04-Feb-19
	Phase 4a - Baldwin Hills County_BHS - Site Installation	90	90	0%	25-Jan-19	30-May-19
	LA-RICS LMR Puente Hills_PHN	903	116	87.15%	16-Nov-15 A	31-May-19
	Phase 1 - Puente Hills_PHN - System Design	788	1	99.87%	16-Nov-15 A	21-Dec-18
	Phase 2 - Puente Hills_PHN - Site Construction and Modification	265	0	100%	12-Dec-16 A	16-Jan-18
	Phase 3 - Puente Hills_PHN - Supply LMR System Components	656	92	85.98%	03-Oct-16 A	02-May-19
	Phase 4a - Puente Hills_PHN - Site Installation	590	26	95.59%	16-Feb-17 A	31-May-19
	LA-RICS LMR Black Jack Peak_BJM	1115	405	63.68%	03-Dec-15 A	10-Apr-20
	Phase 1 - Black Jack Peak_BJM - System Design	1013	303	70.09%	03-Dec-15 A	20-Nov-19
	Phase 2 - Black Jack Peak_BJM - Site Construction and Modification	242	242	0%	24-Apr-19	26-Mar-20
	Phase 3 - Black Jack Peak_BJM - Supply LMR System Components	505	116	77.03%	04-Dec-17 A	13-Mar-20
	Phase 4a - Black Jack Peak_BJM - Site Installation	45	45	0%	10-Feb-20	10-Apr-20
	LA-RICS LMR Tejon Peak_TPK	1119	185	83.47%	03-Dec-15 A	07-Jun-19
	Phase 1 - Tejon Peak_TPK - System Design	999	1	99.9%	03-Dec-15 A	21-Dec-18
	Phase 2 - Tejon Peak_TPK - Site Construction and Modification	457	55	87.96%	20-Dec-16 A	07-Dec-18
	Phase 3 - Tejon Peak_TPK - Supply LMR System Components	609	92	84.89%	16-Dec-16 A	02-May-19
	Phase 4a - Tejon Peak_TPK - Site Installation	405	185	54.32%	14-Nov-17 A	07-Jun-19

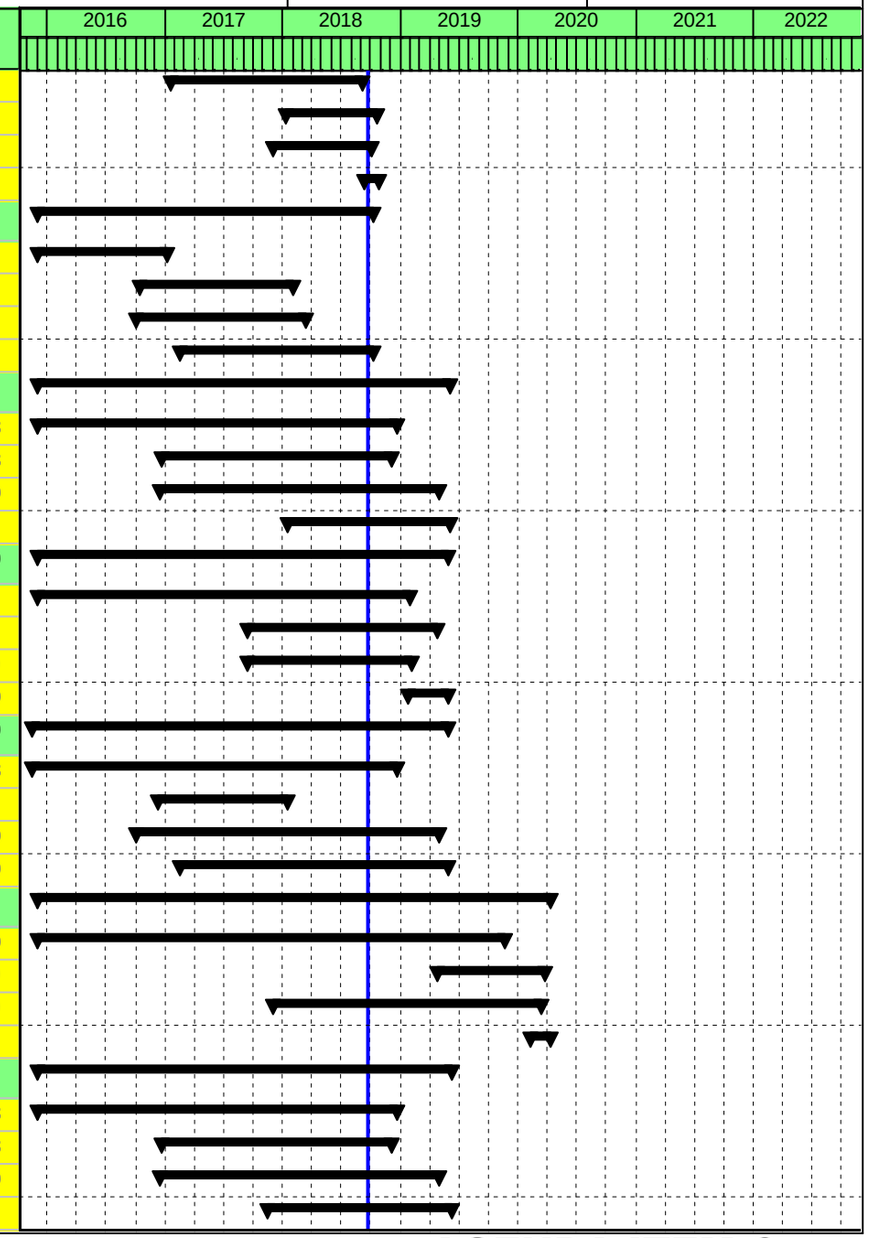

AGENDA ITEM C

LMR Site Schedules

Data Date 22-Sep-18
Page 9 of 10

Summary

Activity ID	Activity Name	Original Duration	Remaining Duration	Duration % Complete	Start	Finish
	LA-RICS LMR Dakin Peak_DPK	1125	415	63.11%	03-Dec-15 A	24-Apr-20
	Phase 1 - Dakin Peak_DPK - System Design	1013	303	70.09%	03-Dec-15 A	20-Nov-19
	Phase 2 - Dakin Peak_DPK - Site Construction and Modification	241	241	0%	23-Apr-19	24-Mar-20
	Phase 3 - Dakin Peak_DPK - Supply LMR System Components	505	116	77.03%	04-Dec-17 A	13-Mar-20
	Phase 4a - Dakin Peak_DPK - Site Installation	55	55	0%	10-Feb-20	24-Apr-20
	LA-RICS LMR San Dimas_SDW	802	79	90.15%	16-Nov-15 A	10-Jan-19
	Phase 1 - San Dimas_SDW- System Design	703	0	100%	16-Nov-15 A	07-Jun-18
	Phase 2 - San Dimas_SDW - Site Construction and Modification	361	52	85.6%	11-Jul-17 A	04-Dec-18
	Phase 3 - San Dimas_SDW - Supply LMR System Components	314	0	100%	26-Jul-17 A	16-Mar-18
	Phase 4a - San Dimas_SDW - Site Installation	103	33	67.96%	05-Feb-18 A	10-Jan-19
	LA-RICS LMR Palmdale Sheriff Station_PLM	959	25	97.39%	03-Dec-15 A	26-Oct-18
	Phase 1 - Palmdale Sheriff Station_PLM - System Design	698	0	100%	03-Dec-15 A	20-Nov-17
	Phase 2 - Palmdale Sheriff Station_PLM - Site Construction and Modification	138	0	100%	08-Aug-17 A	08-Mar-18
	Phase 3 - Palmdale Sheriff Station_PLM - Supply LMR System Components	397	0	100%	03-Oct-16 A	16-Mar-18
	Phase 4a - Palmdale Sheriff Station_PLM - Site Installation	228	25	89.04%	11-Dec-17 A	26-Oct-18
	LA-RICS LMR Tower Peak_TWR	1154	444	61.53%	03-Dec-15 A	04-Jun-20
	Phase 1 - Tower Peak_TWR - System Design	1018	308	69.74%	03-Dec-15 A	27-Nov-19
	Phase 2 - Tower Peak_TWR- Site Construction and Modification	268	268	0%	23-Apr-19	30-Apr-20
	Phase 3 - Tower Peak_TWR- Supply LMR System Components	510	116	77.25%	04-Dec-17 A	20-Mar-20
	Phase 4a - Tower Peak_TWR - Site Installation	79	79	0%	17-Feb-20	04-Jun-20
	LA-RICS LMR Green Mountain_GRM	1379	445	67.73%	03-Dec-15 A	05-Jun-20
	Phase 1 - Green Mountain_GRM - System Design	1263	329	73.95%	03-Dec-15 A	26-Dec-19
	Phase 2 - Green Mountain_GRM - Site Construction and Modification	275	275	0%	23-Apr-19	11-May-20
	Phase 3 - Green Mountain_GRM - Supply LMR System Components	527	116	77.99%	04-Dec-17 A	14-Apr-20
	Phase 4a - Green Mountain_GRM - Site Installation	63	63	0%	11-Mar-20	05-Jun-20
	LA-RICS LMR Rancho Palos Verdes City Hall_RPV1	1251	317	74.66%	03-Dec-15 A	10-Dec-19
	Phase 1 - Rancho Palos Verdes City Hall_RPV1 - System Design	1135	201	82.29%	03-Dec-15 A	01-Jul-19
	Phase 2 - Rancho Palos Verdes City Hall_RPV1 - Site Construction and Modifi	410	231	43.66%	22-Sep-17 A	04-Nov-19
	Phase 3 - Rancho Palos Verdes City Hall_RPV1 - Supply LMR System Compo	352	232	34.09%	04-Dec-17 A	13-Aug-19
	Phase 4a - Rancho Palos Verdes City Hall_RPV1 - Site Installation	105	105	0%	17-Jul-19	10-Dec-19
	LA-RICS LMR Verdugo Peak County_VPK	1003	69	93.12%	03-Dec-15 A	27-Dec-18
	Phase 1 - Verdugo Peak County_VPK - System Design	737	1	99.86%	03-Dec-15 A	24-Sep-18
	Phase 2 - Verdugo Peak County_VPK - Site Construction and Modification	501	53	89.42%	20-Dec-16 A	05-Dec-18

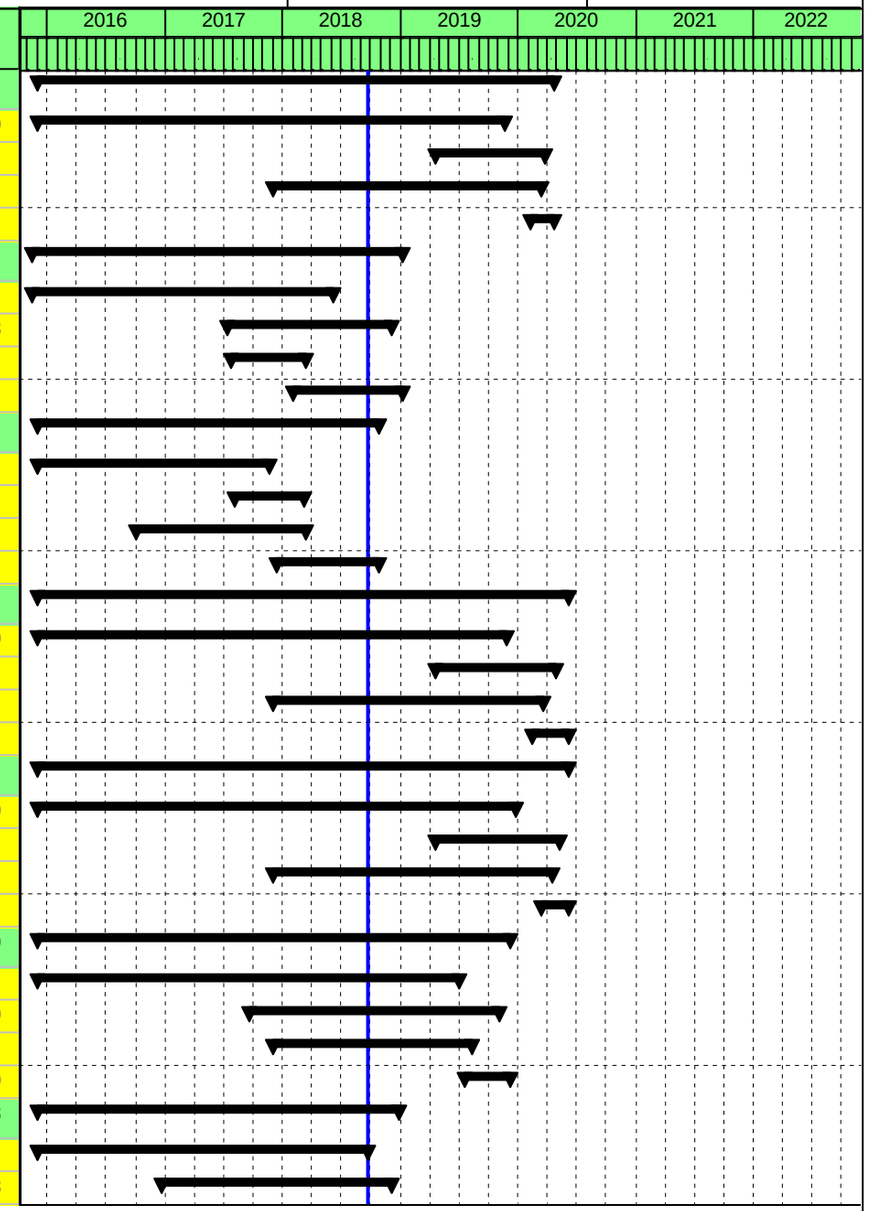

AGENDA ITEM C

LMR Site Schedules

Data Date 22-Sep-18
Page 10 of 10

Summary

Activity ID	Activity Name	Original Duration	Remaining Duration	Duration % Complete	Start	Finish
	Phase 3 - Verdugo Peak County_VPK - Supply LMR System Components	345	0	100%	16-Dec-16 A	16-Mar-18
	Phase 4a - Verdugo Peak County_VPK - Site Installation	139	69	50.36%	29-May-18 A	27-Dec-18

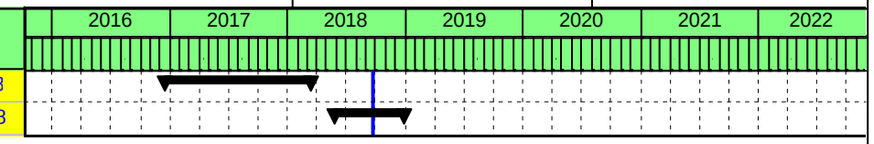

AGENDA ITEM C

Monthly Report #61

Reporting Period: 8/26/18 thru 9/20/18

Los Angeles Regional Interoperable Communications System (LA-RICS) - Land Mobile Radio System

Motorola Solutions, Inc.

AGENDA ITEM C

Table of Contents

1. Executive Summary 3

2. Project Status 7

2.1 Tasks In Progress or Completed 7

2.2 Tasks Planned for Next Period 8

3. Project Risk Register 10

4. Areas of Concern 11

5. Disputes and Claims 11

6. Financial Status 11

7. LA-RICS Master Schedule 11

© Copyright 2015 LA-RICS Authority. All Rights Reserved.

1. Executive Summary

The Los Angeles Regional Interoperable Communications System Land Mobile Radio (LA-RICS LMR) program consists of the following five (5) phases; Phase 1 LMR System Design, Phase 2 LMR Site Construction and Site Modification, Phase 3 Supply LMR System Components, Phase 4 LMR System Implementation, and Phase 5 LMR System Maintenance. Phases 1-4 span over a five (5) year period which includes one (1) year of system warranty. Phase 5 provides the Authority with fifteen (15) one year options for Motorola Solutions Inc. (MSI) to provide system monitoring and maintenance services.

The LA-RICS LMR program is currently in Phase 1 LMR System Design. Notices-To-Proceed numbers 1 through 16 have been issued authorizing distinct work for system Design services, the design and implementation of the initial deployment of the LMR system elements termed "Early Equipment", "Specified Equipment and System on Wheels", and "Station B Equipment", "Frequency Licensing", "UPS System", and "Portable Radios, Consolettes and Consoles", "Portable Radio Equipment", alternate sites "Project Descriptions", "Frequency Licensing for the Base System", "Bridge Warrant for Early", "Retuning of SOW & Station B UHF Frequencies", "Project descriptions for Nine Potential Replacement Sites" and "LMR System Redesign and Relocation of Core 2".

On April 25 the Authority executed **Amendment 17** to make necessary changes to Phase 1 for additional project descriptions, to make changes to reflect the Work in the applicable Phases for the change in the number of sites in the LMR system, to exercise the Unilateral Options for all Work pertaining to Phases 2-4.

On April 27, 2016 the Authority issued **NTP17** authorizing specific Work related Phases 2, 3, and 4 for ten (10) LMR sites.

On May 4, 2016 the Authority executed **Amendment 18** to make necessary changes to Phase 1 for additional project descriptions and to make adjustments to Phase 1 services to accommodate additional sites.

On May 5, 2016 the Authority Board of Directors approved **Amendment 19** to remove one (1) site from the system and to reconcile equipment quantities for certain LMR sites. **Amendment 19** was executed with an effective date of May 5, 2016.

On June 2, 2016 the Authority issued **NTP18** authorizing Work to develop Project Descriptions for two LMR sites.

On September 8, 2016 the Authority Board of Directors approved **Amendment 20** to reconcile nine (9) LMR Sites to reflect the updated LMR System Design, inclusion of 3D modeling drawings, and remove certain Site Lease Exhibits from the contract.

On October 6, 2016 the Authority Board of Directors approved **Amendment 21** to reconcile ten (10) LMR sites to reflect the updated LMR System Design, replace one (1) LMR site with a new site, remove five (5) Project Descriptions from the contract, and make administrative cost changes to one (1) LMR site.

On October 11, 2016 the Authority issued **NTP 19** authorizing specified Work related to Phases 2-4 for nine (9) LMR sites.

© Copyright 2015 LA-RICS Authority. All Rights Reserved.

On November 3, 2016 the Authority Board of Directors approved **Amendment 22** to reconcile three (3) LMR sites to reflect the updated LMR System Design and to make administrative changes to Exhibit F (Administration of Agreement).On December 12, 2016 the Authority issued **NTP 20** authorizing specified Work related to Phases 2-4 for two (2) replacement LMR sites along with Special Operations Testing for DTVRS, ACVRS, LARTCS, and NMDN.

On December 12, 2016 the Authority Board of Directors approved **Amendment 23** to authorize specified Work related to Phases 2-4 for ten (10) LMR sites.

On December 2, 2016 the Authority issued **NTP 20** authorizing Phase 2-4 work at two (2) sites; and specified pre-installation acceptance testing for DTVRS, ACVRS, LARTCS, NMDN, and final core staging and SOT Prep.

On December 19, 2016 the Authority issued **NTP 21** authorizing specified Work related to Phases 2-4 for Six (6) LMR sites; all remaining work in Phase 2-4 at one (1) site; and all work related to ACVRS equipment in Phase 3 for six (6) sites.

On January 12, 2017 the Authority Board of Directors approved **Amendment 24** reconciling the following five (5) LMR System Sites (CLM, LACFDEL, LARICSHQ, WMP, WTR) to align with the updated System Design.

On March 2, 2017 the Authority Board of Directors approved **Amendment 25** reconciling the following six (6) LMR System Sites (AGH, VPK, BMT, CRN, MVS, and ONK) to align with the updated System Design. This Amendment also acknowledges three (3) sites (BHS, DPW38, and RPV1) into the scope of Phases 2, 3, and 4 to align with the updated LMR System Design.

On March 31, 2017 the Authority issued a Supplemental **NTP 21** authorizing specified Work related to Phases 2-4 for Seven (7) LMR sites (AGH, CRN, MVS, ONK, TPK, VPK, and LDWP243).

On April 6, 2017 the Authority Board of Directors approved **Amendment 26** reconciling the following seven (7) LMR System Sites (BUR1, JPK2, LPC, MDI, MML, MTL2, and PRG) to align with the updated System Design. This Amendment also acknowledges one (1) site (LAN) into the scope of Phases 2, 3, and 4 to align with the updated LMR System Design.

On June 1, 2017 the Authority Board of Directors approved **Amendment 27** reconciling the following two (2) LMR System Sites (FRP and PLM) to align with the updated System Design. This Amendment also includes two (2) sites (BKK and UCLA) into the scope of Phases 2, 3, and 4 to align with the updated LMR System Design.

On June 29, 2017 the Authority issued **NTP 22** authorizing specified Work related to work for Task A.1.9.1 (Mitigation Monitoring and Reporting Plan (MMRP).

On August 3, 2017 the Authority Board of Directors approved **Amendment 28** reconciling one (1) LMR System Site (BMT) to align with the updated System Design.

© Copyright 2015 LA-RICS Authority. All Rights Reserved.

On September 7, 2017 the Authority Board of Directors approved **Amendment 29** reconciling one (1) LMR System Site (POM) to align with the updated System Design and to make changes necessary to reflect LMR Change Order Modifications.

On September 14, 2017 the Authority issued **NTP 23** authorizing specified Work related to Phases 2-4 for Five (5) LMR sites.

On September 25, 2017 the Authority issued **NTP 24** authorizing specified Work related to Phases 2-4 for Five (5) LMR sites.

On November 9, 2017 the Authority Board of Directors approved **Amendment 30** reconciling seven (7) LMR System Sites (BUR1/DPW38/FRP/JPK1/MIR/MML/RHT) to reflect the updated LMR System Design for these sites. This Amendment also includes one (1) LMR System Site (UNIV) into the scope of Phases 2, 3, and 4 to align WITH THE UPDATED LMR SYSTEMN Design.

On December 20, 2017 the Authority issued **NTP 25** authorizing specified Work related to Phases 2-4 for Eighteen (18) LMR sites – with the exception of ACRVS and NMDN equipment order. This NTP also authorized Motorola to proceed with Work for Task 6 Multiprotocol Label Switching (MPLS) Mobile Backhaul.

On February 28, 2018 the Oversight Committee approved **Amendment 31** approving Change Order Modifications in the amount of $19,573.00.

On March 6, 2018 the Authority Board of Directors approved **Amendment 32** reconciling three (3) LMR System Sites to align with the updated LMR System Design for a cost decrease in the amount of $4,131,931; (b) a cost neutral administrative reconciliation in connection with the Narrowband Mobile Data Network (NMDN) Subsystem to align all corresponding per site NMDN costs to a single line item cost, impacting thirty-three (33) LMR System Sites; (c) decrease the Maximum Contract Sum by $4,131,931 from $300,051,310 to $295,919,379 when taking the cost decrease into consideration; and (d) make other certain changes as set forth in this Amendment No. 32.

On May 30, 2018 the Authority Board of Directors approved **Amendment 33** to make changes necessary to reflect (a) certain LMR Change Order Modifications for a cost increase in the amount of $17,490.

On June 15, 2018 the Authority issued **NTP 26** authorizing all Work related to Phases 3 for Twelve (12) LMR sites – with the exception of the Phase 3 ACRVS equipment which was previously captured in NTP25. This NTP also authorized Motorola to proceed with Work for Task 6 Multiprotocol Label Switching (MPLS) Mobile Backhaul.

On July 31, 2018 the Authority Board of Directors approved **Amendment 34** to make changes necessary to reflect (a) the inclusion of one (1) LMR System Site into the scope of Phase 2 (Site Construction and Site Modification), Phase 3 (Supply LMR Components), Phase 4 (LMR System Implementation), and exercise the Unilateral Options of the same, to align with the updated LMR System Design for a cost increase in the amount of $1,016,780; (b) certain LMR Change Order Modifications for a cost increase in the amount of $90,744; (c) the removal of certain Authority equipment, in particular an Uninterruptible Power Supply (UPS), from the Los Angeles Police Department's Valley Dispatch Center (LAPDVDC) for a cost increase in the amount of $6,010; (d) an extension of a bridge warranty for the certain Early Deployment/Specified Equipment purchased and deployed under previously approved Amendments to

© Copyright 2015 LA-RICS Authority. All Rights Reserved.

bridge the warranty gap for this equipment until December 31, 2019, for a cost increase in the amount of $430,800; (e) increase the Maximum Contract Sum by $1,544,334 from $295,936,869 to $297,481,203 when taking the cost increase into consideration; and (f) make other certain changes as set forth in this Amendment No. 34.

On August 28, 2018 the Authority issued **NTP 27** authorizing Work related to Phases 2-4 for the LMR INDWT LMR site, extension of the bridge warranty for certain deployed/specified equipment under previously approved Amendments until December 31, 2019.

This report covers the period from 8/26/18 thru 9/20/18

During this reporting period associated Phase 1 tasks were performed to include A&E activities, site and network design, frequency planning, site scope reviews, Site Access Agreement drawings, backhaul/microwave path surveys, and Environmental Reviews. A&E activities included site walks, site sketch development, site surveys, and development of the Zoning Drawings, geotechnical plans, and Construction Drawings.

The primary Phase 1 activities for this period include:

LMR System Design
System design activities for this period included frequency identification and planning, backhaul network design, narrowband mobile data network design, fleet mapping, Spectrum Fingerprinting and Noise Floor Monitoring process review, and incorporation of system design parameters into the construction drawing process. MSI is utilizing the Design of Record dated 9/6/16 to support the site True-Up process as well as information as it is refined and determined weekly. MSI and the Authority continue to refine the backhaul design and have identified areas of concern and their corresponding solutions.

Site Design Activities
Site design activities for this period included continued site evaluation walks, site sketch development and submittals, site survey walks, project description development and submittals for additional sites, Site Access Agreement exhibits, Zoning Drawing development and submittal, and Construction Drawing development and submittal for Authority review. Additional activities included power load studies, evaluation of as-built drawings and tower mapping, tower structural analysis for the applicable sites, submittal of applicable geotechnical drilling plans, and review of electrical one-line drawing designs.

LA-RICS Deliverables - Authority Site Access Agreements
Authority's efforts to develop and execute the applicable Right of Entry and Site Access Agreements for the required sites in the LMR design are ongoing. This activity is primarily being driven by the Authority's Site Access Team in conjunction with LA County CEO Real Estate Division. As of this reporting period 24 (out of 60) Site Access Agreements have been executed.

The Authority continues to work with FEMA to obtain independent site environmental approvals which are required prior to the start of construction at a site.

The following table provides a dashboard snapshot of the projects' health signs.

LMR Project Dashboard

© Copyright 2015 LA-RICS Authority. All Rights Reserved.

Category	Rating	Change	Comments
Schedule			Revisions to the baseline schedule for all phases (1-4) are reviewed weekly. A&E drawing progress is still slow but is being followed and tracked on a weekly basis. MSI and the Authority continue to see slips in individual site schedules that impact its overall Program schedule due to delays in Site Access Agreement, A&E drawings, Building Permit Submissions, and construction starts These delays continue to negatively impact the schedule. All parties to this contract are working on plans and negotiations are underway to pull dates in to meet funding requirements.
Quality			The construction drawing, review, and approval process continues to be challenging. Corrective actions continue to be put into place. The Authority and MSI will continue to work together to identify additional means to shorten this process. MSI will continue with improvements to its quality control processes and cycle times. Both parties have agreed to a process to streamline the cycle times which address the quality and comment incorporation issues experienced to date while simultaneously limiting the number of revisions necessary prior to approval. The Authority has requested MSI hire additional resources to address the drawing production time.
Risk			Risk items have been identified regarding: Spectrum, Site Access Agreements, and Site Conditions. FEMA independent site environmental approvals required.
Budget			Current budget reflects contract pricing and include the sites that have gone through the true-up review. Revised budgets for each site will be determined at the completion of each true-up.

2. Project Status

The following sections identify task activities during the reporting period and the planned activities for the next reporting period.

2.1 Tasks In Progress or Completed

The following depict the task activity that occurred during the current reporting period.

Activity Name	Activity Status
LA-RICS Deliverables	
Lease Negotiations & Site Access Use Agreements	In Process
FEMA Environmental Site Approvals & Construction Waivers	In Process
Notice To Proceed for applicable sites	In Process

© Copyright 2015 LA-RICS Authority. All Rights Reserved.

Activity Name	Activity Status
LMR System Design	
Design baseline site parameters & Design development	In Process
Contract True-up of site designs and equipment for each site	In Process
Spectrum Fingerprinting and Noise Floor Monitoring Initial Test Update	In Process
Provided updated USFS tower elevations	In Process
Site Design, Zoning and Permitting	
Site Walks and Site Sketch Development & Approvals	In Process
Site Surveys	In Process
Develop Zoning Drawings & Approvals	In Process
Geotechnical Boring	In Process
Develop Construction Drawings & Approvals	In Process
Submit Permits Drawings and Approvals (26/59 Sites submitted; 21/59 Sites Received)	In Process
Pre- Construction	
Pre- Construction Plans in review	In Process
Pre-Proposal meeting with USFS representatives	In Process
Construction	
19/59 Sites under construction	In Process
Staging	
UASI17 Sites – September, 2018	In Process
FNE Installation	
A&L, Microwave Dishes, Equipment Racks,	In Process

2.2 Tasks Planned for Next Period

The following depict the task activity that is planned for the next reporting period.

Activity Name	Planned Status
LA-RICS Deliverables	
Lease Negotiations & Site Access Use Agreement	On Going
Access to Core Sites	On Going
FEMA Environmental Site Approvals & Construction Waivers	In Process
Review and Approve Zoning and Construction Drawings	In Process
Notice To Proceed for applicable sites	In Process
LMR System Design	
Design Baseline site parameters & redesign development	In Process
Contract True-up of site designs and equipment for each site	In Process
Site Design	
Site Walks and Site Sketch Development & Approvals	In Process
Site Surveys	In Process

© Copyright 2015 LA-RICS Authority. All Rights Reserved.

Activity Name	Planned Status
Develop Zoning Drawings & Approvals	In Process
Submittal of Zoning Drawings	In Process
Develop Construction Drawings and Approvals	In Process
Submit Permits Drawings and Approvals	In Process
Pre-Construction	
Geotech drilling	In Process
Pre- Construction Packages & Site Monitoring (where applicable)	In Process
Site Construction	
Outreach to Neighborhoods for Applicable Sites	On Going
Pre- Construction Packages Review & Approval	On Going
Site Construction & Site Monitoring (where applicable) CLM, LARICSHQ	On Going
Site Construction Inspection Approvals	On Going
FNE Installation	
A&L, Microwave Dishes, Equipment Racks,	In Process

2.3 Authority Look-Ahead Tasks (120-Day)

For the Authority planning purposes the following table provides a one hundred twenty (120) Day look-ahead of the Authority-specific activities to conduct coordination, inspections, approvals, consents, and or provide decisions necessary from the Authority to facilitate Contractor's progress.

Activity Name	Planned Status
LA-RICS Deliverables	
Lease Negotiations & Site Access Use Agreement	On Going
Access to Core Sites	On Going
FEMA Environmental Site Approvals & Construction Waivers	In Process
Review and Approve Zoning and Construction Drawings	In Process
Notice To Proceed for applicable sites	In Process
Environmental Review & Documentation (Authority)	
Additional Sites for Consideration Environmental Reviews	In Process
LMR System Design	
Design Baseline site parameters & Design development	In Process
Contract True-up of site designs and equipment for each site	In Process
Site Design	
Site Walks and Site Sketch Development & Approvals	In Process
Zoning Drawings & Approvals	In Process
Construction Drawings and Approvals	In Process
Pre-Construction	

© Copyright 2015 LA-RICS Authority. All Rights Reserved.

Activity Name	Planned Status
Geotech drilling	In Process
Pre- Construction Packages & Site Monitoring (where applicable)	In Process
Site Construction	
Outreach to Neighborhoods for Applicable Sites	On Going
Pre- Construction Packages Review & Approval	On Going
Site Construction & Site Monitoring (where applicable)	On Going
Site Construction Inspection Approvals)	On Going
FNE Installation	
A&L, Microwave Dishes, Equipment Racks,	In Process

3. Project Risk Register

Title	Assigned	Impact	Risk Description	Status
Site Parameters	Authority	High	Site parameters (e.g. tower heights, RF equipment configurations) are different from the baseline agreement and may impact System performance.	Active
Environmental Process	Authority	High	The individual determination of environmental impacts or mitigation may impact the schedule for site work (e.g., bird nesting season). Individual environmental releases from FEMA are required to start work at sites.	Active
Delayed Drawings and Permit Release	Motorola & Authority	High	Delay in permit submission and release has impacted the construction schedule and ability to meet grant spending guidelines. The Authority and MSI continue to struggle to incorporate Authority comments, creating a quality control issue which requires additional rounds of review. This has inhibited the submission of drawings for permit.	Active
Site Access Agreements	Authority	Med	Lease holders approvals are needed in order to implement LA-RICS improvements.	Active
Project Schedule	Authority & Motorola	High	Overall project schedule and individual site permit submissions/work starts impacted by slow A&E construction development progress and progress once a site begins	Active

© Copyright 2015 LA-RICS Authority. All Rights Reserved.

Title	Assigned	Impact	Risk Description	Status
			construction..	

4. Areas of Concern

This section describes any events and or circumstances of which the Contractor is aware that has delayed or may delay project activities and what corrective or remedial actions was taken or will be taken to resolve the issue. Outstanding Issues Log (the "OIL Log") entries are also tabulated and monitored in this section. "Oil Log" items include, for example, sequencing, infrastructure, site access, coordination issues, congestion of workers and equipment, time requirements for design, procurement, and installation.

ID	Event / Circumstance	Remedial Action Taken or Required
	None at this time	

5. Disputes and Claims

This section describes any disputes, potential claims, and claims made during the reporting period.

Dispute / Claim / Potential Claim	Status / Actions	Resolution Date
None at this time		

6. Financial Status

The following represents the invoice payments that were completed during the reporting period and the remaining amount to be invoiced and paid.

Invoice Payment Category	Invoice Payment Totals ($)
Contract Sum Full Payable Amount (Amendment 30)	166,928,248
Cumulative Invoice Payments from Last Report	74,620,233
Total Invoice Payments This Period	0
Remaining Amount to be Paid	92,308,015

7. LA-RICS Master Schedule

The current P6 baseline schedule is titled "LMR IMS and Site Project Schedule_DD21-Oct-2017". Variance reports are distributed weekly, reviewed, and discussed at weekly meetings.

© Copyright 2015 LA-RICS Authority. All Rights Reserved.

(See attached LMR Executive Project Summary Snapshots)

© Copyright 2015 LA-RICS Authority. All Rights Reserved.

LOS ANGELES REGIONAL INTEROPERABLE COMMUNICATIONS SYSTEM AUTHORITY

2525 Corporate Place, Suite 100
Monterey Park, California 91754
Telephone: (323) 881-8291
http://www.la-rics.org

SCOTT EDSON
EXECUTIVE DIRECTOR

October 4, 2018

To: LA-RICS Authority Board of Directors

From: Scott Edson
Executive Director

OUTREACH UPDATE

The purpose of this discussion item is to update your Board on the status of outreach activities pertaining to the LA-RICS Public Safety Broadband Network (PSBN) and Land Mobile Radio (LMR) project. The below meetings occurred since our last report to you:

Municipality	Meeting Date
Meeting with representatives from the Federal Bureau of Investigations (FBI)	September 10, 2018
Meetings with representatives from AT&T	September 10, 11, 17, 24, 25, 2018
CalFRN Board of Director's Meeting	September 12, 2018
Presentation to Congregation Ner Tamid Synagogue	September 14, 2018
Meeting with representative from Sonim Technology	September 14, 2018
LA Police Chief's Strategic Planning Conference	September 19-20, 2018
Meeting with Vernon Fire Chief	September 24, 2018
Meeting with representatives from MTA	September 25, 2018
Local Control Summit Presentation	September 26, 2018

Executive Director Scott Edson, Program Director Odenthal and Program Manager Delfino met with Los Angeles representatives of the FBI to provide them with an update on the LMR System and an opportunity for testing the LA-RICS system.

Various meetings continued in the month of September with AT&T to discuss ongoing Technical and Program Management concerns, Transfer Transition logistics, Checkpoint Calls, Round 2 Specifications, Assignment & Assumption Agreements and quarterly progress review.

AGENDA ITEM F

Executive Director Edson attended the CalFRN Board of Director's Monthly Meeting.

Members of the LA-RICS Team made a presentation to the Congregation Ner Tamid Synagogue in Rancho Palos Verdes regarding the proposed LMR site at Rolling Hills Transmit (RHT).

Executive Director Edson met with representatives from Sonim Technology to continue discussions of innovative Public Safety Communications Technology.

Executive Director Edson and Program Manager Delfino attended and made a presentation at the Los Angeles Police Chief's Strategic Planning Conference that was held in Temecula, California.

Members of the LA-RICS Team had a follow-up meeting with representatives from MTA to discuss technical requirements for membership/subscriber opportunities.

Executive Director Edson met with Vernon Fire Chief Bruce English to provide an update on LA-RICS and the AT&T Asset Transfer Agreement for the two PSBN sites in the City of Vernon.

Lastly, the LA-RICS Communications Team is finalizing the revised Fact Sheet and Volume 3, Issue 12 of the LA-RICS Newsletter was released on September 27, 2018.

WST:pl

LOS ANGELES REGIONAL INTEROPERABLE COMMUNICATIONS SYSTEM AUTHORITY

2525 Corporate Place, Suite 100
Monterey Park, California 91754
Telephone: (323) 881-8291
http://www.la-rics.org

SCOTT EDSON
EXECUTIVE DIRECTOR

October 4, 2018

To: LA-RICS Authority Board of Directors

From: Scott Edson
Executive Director

PSBN ONBOARDING UPDATE

The purpose of this discussion item is to update your Board on the status of onboarding users, migrating users to FirstNet and other onboarding related activities pertaining to the Public Safety Broadband Network (PSBN) project. The below activities have occurred:

STATUS OF PSBN AGENCY ONBOARDING		
Agency	**Onboarding Status**	**Number of Units Installed, Demo Kit or SIM cards Received**
LASD	Installations in progress.	1306
LACoFD	Installations in progress.	693
Inglewood PD	FirstNet connection is awaiting final testing. Joint testing of the APN is being scheduled to complete by 10/18/18. 17 vehicle installation complete. Joint meeting with FirstNet/AT&T scheduled for September 27, 2018.	25
Claremont PD	FirstNet connection and testing is complete.	2
Bell PD	Two routers in use. Working directly with FirstNet/AT&T	2
Covina PD	Two routers in use. Transition options from the LA-RICS APN are under review.	2
UCLA Health	Mobile Stroke Unit in operation using the LA-RICS connection. Transition options from the LA-RICS APN under review.	1
Health Services / EMS	Request for antennas for 3 routers approved pending procurement of installation services and antennas. Transition options from the LA-RICS APN under review.	3
El Segundo Fire & PD	Two routers in use via LA-RICS connection. Routers in use over the LA-RICS APN and transition options from the LA-RICS APN under review..	2

The transition of the PSBN sites to AT&T continues. We are coordinating joint testing with the above mentioned agencies to minimize any service impacts due to the transition. Device vendor discussions are underway to provide the best possible options for LA-RICS Member agencies currently using the PSBN.

AGENDA ITEM G

LA-RICS

LOS ANGELES REGIONAL INTEROPERABLE COMMUNICATIONS SYSTEM AUTHORITY

2525 Corporate Place, Suite 100
Monterey Park, California 91754
Telephone: (323) 881-8291
http://www.la-rics.org

SCOTT EDSON
EXECUTIVE DIRECTOR

October 4, 2018

Board of Directors
Los Angeles Regional Interoperable Communications System Authority (the "Authority")

Dear Directors:

APPROVE AN AGREEMENT FOR ENGINEERING DESIGN AND RELATED SERVICES

SUBJECT

Board approval is requested to approve an Agreement with David Evans and Associates, Inc. for Engineering Design and Related Services and delegate authority to the Executive Director execute the Agreement, in substantially similar form to the enclosed Engineering Design and Related Services Agreement (Enclosure), for a not-to-exceed amount of $2,600,400.

RECOMMENDED ACTION

It is recommended that your Board:

1. Find the proposed actions are exempt from the California Environmental Quality Act (CEQA) for the reasons stated in this Board letter.

2. Approve the Engineering and Design Services Agreement with David Evans and Associates, Inc. (David Evans and Associates), substantially similar in form to the attached Enclosure, with a contract term that will commence upon execution of the Agreement and continue through final acceptance of all work for Round 2 of the PSBN Project by the Authority, for a total not-to-exceed contract amount of $2,600,400.

3. Delegate authority to the Executive Director as follows:

AGENDA ITEM H

a. To execute the Agreement substantially similar in form to the attached Enclosure.

b. To approve and execute Amendments to the Agreement that do not impact the total not-to-exceed contract amount, the term, or any terms or conditions of the Agreement, provided any such Amendments are approved as to form by Counsel to the Authority.

c. To issue Notices to Proceed for work contemplated in the Agreement.

BACKGROUND

On December 14, 2017, your Board authorized the Authority to enter into an Asset Transfer Agreement with AT&T Corp. (AT&T) to transfer and assign its 20% right, title, and interest in the initial Broadband Technologies Opportunity Program (BTOP) grant funded buildout of the LA-RICS PSBN for inclusion into the First Responder Network Authority (FirstNet) National Public Safety Broadband Network (NPSBN). This Agreement required, among other things, the Authority continue with the PSBN buildout contemplated in the PSBN Round 2 Project Implementation Plan (PIP) under Objective 1 (Coverage Augmentation) and required the National Telecommunications and Information Administration (NTIA) and National Oceanic and Atmospheric Administration (NOAA) to approve the PSBN Round 2 PIP.

On February 15, 2018, the Authority submitted the PSBN Round 2 PIP to NTIA and NOAA for consideration.

On June 25, 2018, NTIA and NOAA approved Objective 1 (Coverage Augmentation) and Objective 2 (Rapid Response Vehicles) contemplated in the PSBN Round 2 PIP.

The Authority enlisted the assistance of the County of Los Angeles Department of Public Works (Public Works) to issue a Request for Proposals (RFP) for engineering design and construction drawings relating to Coverage Augmentation objective, (i.e. the buildout of PSBN Round 2 sites). With respect to the resultant construction work to buildout PSBN Round 2 sites, the Authority intends to issue construction solicitations through Public Works.

PURPOSE/JUSTIFICATION OF RECOMMENDED ACTION

The purpose of the recommended action is to allow the Authority to retain engineering design and related services necessary for the buildout of PSBN Round 2.

Conditions of the BTOP grant require the Authority to buildout the PSBN Round 2 sites by June 2020. The Authority enlisted the assistance of Public Works to issue the RFP to

perform engineering design and related services. Public Works has the expertise, resources, and qualification procedures in place to contract engineering design and construction contractors efficiently and in a timely manner.

The resultant Agreement for engineering design and related services will be followed by a procurement to onboard construction firms to physically build the PSBN Round 2 sites. The Authority intends to issue the solicitation for construction services through Public Works.

It is the expectation of the Authority that Motorola Solutions, Inc. (Motorola), the Authority's PSBN contractor, will perform the engineering design and resultant construction work for those PSBN Round 2 sites collocated at Land Mobile Radio (LMR) System sites that Motorola is currently building for the Authority. The Authority intends to bring an amendment to your Board for consideration regarding the same in the near future.

CONTRACTING PROCESS

On August 15, 2018, Public Works released the LA-RICS Authority Engineering Design and Related Services on behalf of the Authority. The solicitation was posted on the County's "Doing Business with Us" website, on Public Works' "Contracting Opportunities" website, and on the LA-RICS website. Additionally, the RFP was advertised in four (4) newspapers: La Opinion, Los Angeles Times, Los Angeles Daily Journal, and the Los Angeles Sentinel.

On August 26, 2018, an optional proposer's conference was held and on September 10, 2018, and David Evans and Associates' proposal was received. The proposal was reviewed for compliance with the minimum mandatory requirements set forth in the RFP. The proposal was determined to meet such minimum mandatory requirements and progressed to the evaluation process. An evaluation committee consisting of an LA-RICS Project Team member, an employee of the Los Angeles Fire Department, and an employee from Public Works evaluated the proposal based on the criteria described in the RFP, including technical expertise, proposed work plan, experience, personnel, qualifications, and understanding of the work requirements.

On September 18, 2018, David Evans and Associates participated in the oral interview process also set forth in the RFP. The evaluation was completed and based on the evaluation of the proposal, David Evans and Associates was determined to be qualified to provide the required services.

On September 26, 2018, the Authority entered into negotiations with David Evans and Associates and successfully negotiated pricing with David Evans. The Authority has determined that the firm's proposed costs for performing the services are reasonable and

in accordance with industry standards. Authority staff recommend entering into an Agreement, substantially similar to the Enclosure.

ENVIRONMENTAL DOCUMENTATION

The proposed action is not a project pursuant to CEQA because it is an activity that is excluded from the definition of a project by Section 15378(b) of the CEQA Guidelines. The proposed action to award the Agreement is an administrative activity of government, which will not result in direct or indirect changes to the environment. We will return to the Board as necessary for consideration of appropriate environmental documentation pursuant to CEQA before the approval of any activities that constitute a project under CEQA.

FISCAL IMPACT/FINANCING

The total not-to-exceed contract amount is $2,600,400 for the engineering design and related services contemplated in the Agreement. The work will be funded by the BTOP grant contemplated in LA-RICS' Adopt Fiscal Year 2018-19 Operating Budget and future Fiscal Year Proposed Budgets.

No Cost of Living Adjustments (COLA) are contemplated in the Agreement.

FACTS AND PROVISIONS/LEGAL REQUIREMENT

The Authority's counsel has reviewed the recommended actions.

CONCLUSION

Upon your Board's approval of the recommended actions, the Executive Director will have delegated authority to proceed in a manner described in the recommended actions.

Respectfully submitted,

SCOTT EDSON
EXECUTIVE DIRECTOR

JA:pl
M:\ENGINEERING DESIGN SERVICES RFP\Board Letter\Contract Award (10-04-18)\Engineering Design Contract Award Board Letter_09-27-18.docx

Enclosure

cc: Counsel to the Authority

Agreement No. LA-RICS 013

between

The Los Angeles Regional Interoperable Communications System (LA-RICS) Authority

and

David Evans and Associates, Inc.

Month Date, Year

AGENDA ITEM H - ENCLOSURE

LOS ANGELES REGIONAL INTEROPERABLE COMMUNICATIONS SYSTEM (LA-RICS) AUTHORITY AGREEMENT FOR ENGINEERING DESIGN AND RELATED SERVICES

THIS AGREEMENT, made and entered into this _____ day of_____, 2018.

BY AND BETWEEN

The LOS ANGELES REGIONAL INTEROPERABLE COMMUNICATIONS SYSTEM AUTHORITY, a joint powers authority in the State of California, hereinafter referred to as LA-RICS Authority,

AND

DAVID EVANS AND ASSOCIATES, INC., hereinafter referred to as Consultant,

The parties hereto do mutually agree as follows:

1. Definition; Attachments

LA-RICS Authority means either LA-RICS Authority; LA-RICS Authority, as agent for such joint powers authority or nonprofit corporation as may be involved in the issuance of bonds, certificates of participation, or other evidences of indebtedness to finance the work contemplated herein; or said joint powers authority or nonprofit corporation.

The Attachments to this Agreement are as follows:

- **Attachment 1** – Scope of Services
  - ✓ Attachment 1.1 – Site Drawing Samples
  - ✓ Attachment 1.2 – Construction Management Requirements
- **Attachment 2** – Indemnification and Insurance Provisions
- **Attachment 3** – Schedule of Prices
- **Attachment 4** – Grant Funding Requirements
  - ✓ Attachment 4.1 – Certification Regarding Lobbying
  - ✓ Attachment 4.2 – Certification Regarding Drug Free Workplace Requirements
  - ✓ Attachment 4.3 – Certification Regarding Debarment, Suspension, Ineligibility and Voluntary Exclusion Lower Tier Covered Transactions
  - ✓ Attachment 4.4 – Management Representation
- **Attachment 5** – Safely Surrendered Baby Law Flyer

2. Consultant's Services

The scope of work shall be as outlined in Attachment 1 (Scope of Services). Consultant's proposal, Request for Proposals (RFP) – LA-RICS AUTHORITY ENGINEERING DESIGN AND RELATED SERVICES, and all addenda/notices to the RFP, are incorporated herein as a part of this Agreement. In the event that any conflict or inconsistency between this Agreement and Consultant's proposal are found, such conflict or inconsistency shall be resolved by giving precedence first to the Agreement and the attachments to the Agreement.

No work shall commence on this project until a written Notice to Proceed (NTP) is issued by LA-RICS Authority. LA-RICS Authority does not guarantee or promise that any work will be assigned to Consultant under this contract until a written Notice to Proceed is issued by the LA-RICS Authority. Consultant is also referred to herein as Contractor.

3. Consideration

In consideration of the performance by Consultant in a manner satisfactory to LA-RICS Authority of the services described in Paragraph 2 above, including receipt and acceptance of such work by the Executive Director of the LA-RICS Authority (hereinafter called Executive Director), LA-RICS Authority agrees to pay Consultant a maximum not to exceed contract amount of Two Million, Six Hundred Thousand, Four Hundred Dollars ($2,600,400) in the manner set forth immediately below and according to the Schedule of Prices attached to this Agreement as Attachment 3 (Schedule of Prices). LA-RICS Authority does not guarantee any work or services of any specific monetary amount under this Agreement.

Consultant shall invoice LA-RICS Authority upon the completion of tasks, subtasks, deliverables, and other additional services specified in this Agreement, Scope of Work, and any change orders, as applicable, and which have been approved in writing by the LA-RICS Authority.

a. Payments for the work accomplished shall be made upon verification and acceptance of such work by Executive Director, as stated in the Attachment 3 (Schedule of Prices) dated October 2018, up to a maximum contract amount of $2,600,400. Invoices shall be accompanied by an analysis of work completed for the invoice period. This analysis shall be prepared in a format satisfactory to Executive Director.

b. Consultant shall not proceed with additional services not set forth in the scope of work or perform services outside the Agreement Term without an amendment to this Agreement as set forth in Paragraph 49. Consultant will not be paid for any expenditure beyond the Agreement amount stipulated without an amendment to this Agreement.

c. No Payment for Services Provided Following Expiration/Termination of Agreement:

Consultant shall have no claim against LA-RICS Authority for payment for any money or reimbursement, of any kind whatsoever, for any service provided by Consultant after the expiration or other termination of this Agreement. Should Consultant receive any such payment it shall immediately notify LA-RICS Authority and shall immediately repay all such funds to LA-RICS Authority. Payment by LA-RICS Authority for services rendered after expiration/termination of this Agreement shall not constitute a waiver of LA-RICS Authority's right to recover such payment from Consultant. This provision shall survive the expiration or other termination of this Agreement.

d. Reserved.

e. Consultant will notify LA-RICS Authority when Agreement amount has been incurred up to 75% of the Agreement total.

4. Equipment and Supplies

Consultant agrees to furnish all necessary equipment and supplies used in the performance of the aforementioned services at Consultant's sole cost and expense.

5. LA-RICS Authority's Responsibility

LA-RICS Authority will make available drawings, specifications, and other records as available in LA-RICS Authority's file. Notwithstanding the foregoing, LA-RICS Authority does not represent the accuracy of the content of said materials.

6. LA-RICS Authority's Representative

LA-RICS Authority in all matters pertaining to the services to be rendered pursuant to this Agreement.

7. Term

The Agreement shall commence on the date of full execution of the Agreement until final acceptance by the LA-RICS Authority. No work will proceed until a Notice to Proceed is issued by the LA-RICS Authority.

8. Assignment and Delegation

a. Consultant shall not assign its rights or delegate its duties under the Agreement, or both, whether in whole or in part, without the prior written consent of LA-RICS Authority, in its discretion, and any attempted assignment or delegation without such consent shall be null and void. For purposes of this paragraph, LA-RICS Authority consent shall require a written amendment to the Agreement, which is formally approved and executed by the parties. Any payments by LA-RICS

Authority to any approved delegate or assignee on any claim under the Agreement shall be deductible, at LA-RICS Authority's sole discretion, against the claims which Consultant may have against LA-RICS Authority.

b. Shareholders, partners, members, or other equity holders of Consultant may transfer, sell, exchange, assign, or divest themselves of any interest they may have therein. However, in the event any such sale, transfer, exchange, assignment, or divestment is effected in such a way as to give majority control of Consultant to any person(s), corporation, partnership, or legal entity other than the majority controlling interest therein at the time of execution of the Agreement, such disposition is an assignment requiring the prior written consent of LA-RICS Authority in accordance with applicable provisions of this Agreement.

c. Any assumption, assignment, delegation, or takeover of any of the Consultant's duties, responsibilities, obligations, or performance of same by any entity other than the Consultant, whether through assignment, subcontract, delegation, merger, buyout, or any other mechanism, with or without consideration for any reason whatsoever without LA-RICS Authority's express prior written approval, shall be a material breach of the Agreement which may result in the termination of the Agreement. In the event of such termination, LA-RICS Authority shall be entitled to pursue the same remedies against Consultant as it could pursue in the event of default by Consultant.

9. Authorization Warranty

The Consultant represents and warrants that the person executing this Agreement for the Consultant is an authorized agent who has actual authority to bind the Consultant to each and every term, condition, and obligation of this Agreement and that all requirements of the Consultant have been fulfilled to provide such actual authority.

10. Budget Reductions

In the event that the LA-RICS Authority's Board of Directors adopts, in any fiscal year, a LA-RICS Authority Budget which provides for reductions with respect to LA-RICS Authority contracts, the LA-RICS Authority reserves the right to reduce its payment obligation under this Agreement correspondingly for that fiscal year and any subsequent fiscal year during the term of this Agreement (including any extensions), and the services to be provided by the Consultant under this Agreement shall also be reduced correspondingly. The LA-RICS Authority's notice to the Consultant regarding said reduction in payment obligation shall be provided within thirty (30) calendar days of the Board's approval of such actions. Except as set forth in the preceding sentence, the Consultant shall continue to provide all of the services set forth in this Agreement.

11. Compliance with Applicable Law

    a. In the performance of this Agreement, Consultant shall comply with all applicable Federal, State and local laws, rules, regulations, ordinances, directives, guidelines, policies and procedures, and all provisions required thereby to be included in this Agreement are hereby incorporated herein by reference.

    b. Consultant shall indemnify, defend, and hold harmless LA-RICS Authority, its member agencies in the LA-RICS Authority, directors, appointed officers, employees, and agents, from and against any and all claims, demands, damages, liabilities, losses, costs, and expenses, including, without limitation, defense costs and legal, accounting and other expert, consulting or professional fees, arising from, connected with, or related to any failure by Consultant, its officers, employees, agents, or subconsultants, to comply with any such laws, rules, regulations, ordinances, directives, guidelines, policies, or procedures, as determined by LA-RICS Authority in its sole judgment. Any legal defense pursuant to Consultant's indemnification obligations under this Paragraph shall be conducted by Consultant and performed by counsel selected by Consultant and approved by LA-RICS Authority. Notwithstanding the preceding sentence, LA-RICS Authority shall have the right to participate in any such defense at its sole cost and expense, except that in the event Consultant fails to provide LA-RICS Authority with a full and adequate defense, as determined by LA-RICS Authority in its sole judgment, LA-RICS Authority shall be entitled to retain its own counsel, including, without limitation, LA-RICS Authority Counsel, and reimbursement from Consultant for all such costs and expenses incurred by LA-RICS Authority in doing so. Consultant shall not have the right to enter into any settlement, agree to any injunction or other equitable relief, or make any admission, in each case, on behalf of LA-RICS Authority without LA-RICS Authority's prior written approval.

12. Compliance with Civil Rights Laws

    The Consultant hereby assures that it will comply with Subchapter VI of the Civil Rights Act of 1964, 42 USC Sections 2000 (e) (1) through 2000 (e) (17), to the end that no person shall, on the grounds of race, creed, color, sex, religion, ancestry, age, condition of physical handicap, marital status, political affiliation, or national origin, be excluded from participation in, be denied the benefits of, or be otherwise subjected to discrimination under this Agreement or under any project, program, or activity supported by this Agreement. The Consultant shall comply with Consultant's EEO Certification.

13. Compliance with Jury Service Program

    This Agreement is subject to provisions of the County's ordinance entitled Contractor Employee Jury Service (Jury Service Program) as codified in Sections 2.203.010 through 2.203.090 of the Los Angeles County Code, incorporated by reference and made a part of this Agreement.

a. Unless Consultant, also referred herein as Contractor, has demonstrated to the LA-RICS Authority's satisfaction either that Contractor is not a Contractor as defined under the Jury Service Program (Section 2.203.020 of the County Code) or that Contractor qualifies for an exception to the Jury Service Program (Section 2.203.070 of the County Code), Consultant shall have and adhere to a written policy that provides that its Employees shall receive from the Contractor, on an annual basis, no less than five days of regular pay for actual jury service. The policy may provide that Employees deposit any fees received for such jury service with the Contractor or that the Contractor deduct from the Employee's regular pay the fees received for jury service.

b. For purposes of this Section, Contractor means a person, partnership, corporation or other entity which has an Agreement with the County or LA-RICS Authority or a subcontract with a County or LA-RICS Authority Contractor and has received or will receive an aggregate sum of $50,000 or more in any 12-month period under one or more County or LA-RICS Authority Contracts or subcontracts. Employee means any California resident who is a full-time employee of Contractor. Full- time means 40 hours or more worked per week, or a lesser number of hours if: 1) the lesser number is a recognized industry standard as determined by the LA-RICS Authority, or 2) Contractor has a long-standing practice that defines the lesser number of hours as full-time. Full-time employees providing short-term, temporary services of 90 days or less within a 12-month period are not considered full-time for purposes of the Jury Service Program. If Contractor uses any subcontractor to perform services for the LA-RICS Authority under the Agreement, the subcontractor shall also be subject to the provisions of this Paragraph. The provisions of this Section shall be inserted into any such subcontract Agreement and a copy of the Jury Service Program shall be attached to the Agreement.

c. If Consultant is not required to comply with the Jury Service Program when the Agreement commences, Contractor shall have a continuing obligation to review the applicability of its exception status from the Jury Service Program, and Contractor shall immediately notify LA-RICS Authority if Contractor at any time either comes within the Jury Service Program's definition of Contractor or if Contractor no longer qualifies for an exception to the Program. In either event, Contractor shall immediately implement a written policy consistent with the Jury Service Program. The LA-RICS Authority may also require, at any time during the Agreement and at its sole discretion, that Contractor demonstrate to the LA-RICS Authority's satisfaction that Contractor either continues to remain outside the Jury Service Program's definition of Contractor and/or that Contractor continues to qualify for an exception to the Program.

d. Contractor's violation of this Paragraph of the Agreement may constitute a material breach of the Agreement. In the event of such material breach, LA-RICS Authority may, in its sole discretion, terminate the Contractor and/or bar Contractor from the award of future LA-RICS Authority contracts for a period of time consistent with the seriousness of the breach.

14. Confidentiality

Consultant shall maintain the confidentiality of all records and information, proprietary information, software codes, trade secrets, confidential information, etc., whether of LA-RICS Authority or third parties, in accordance with all applicable Federal, State, and local laws, rules, regulations, ordinances, directives, guidelines, policies and procedures relating to confidentiality, including, without limitation, LA-RICS Authority policies concerning information technology security and the protection of confidential records and information.

Consultant shall indemnify, defend, and hold harmless LA-RICS Authority, its member agencies in the LA-RICS Authority, directors, appointed officers, employees, and agents, from and against any and all claims, demands, damages, liabilities, losses, costs and expenses, including, without limitation, defense costs and legal, accounting and other expert, consulting, or professional fees, arising from, connected with, or related to any failure by Consultant, its officers, employees, agents, or subconsultants, to comply with this Paragraph, as determined by LA-RICS Authority in its sole judgment. Any legal defense pursuant to Consultant's indemnification obligations under this Paragraph shall be conducted by Consultant and performed by counsel selected by Consultant and approved by LA-RICS Authority. Notwithstanding the preceding sentence, LA-RICS Authority shall have the right to participate in any such defense at its sole cost and expense, except that in the event Consultant fails to provide LA-RICS Authority with a full and adequate defense, as determined by LA-RICS Authority in its sole judgment, LA-RICS Authority shall be entitled to retain its own counsel, including, without limitation, LA-RICS Authority Counsel, and reimbursement from Consultant for all such costs and expenses incurred by LA-RICS Authority in doing so. Consultant shall not have the right to enter into any settlement, agree to any injunction, or make any admission, in each case, on behalf of LA-RICS Authority without LA-RICS Authority's prior written approval.

15. Conflict of Interest

No LA-RICS Authority employee in a position to influence the award of this Agreement or any competing Agreement, and no spouse or economic dependent of such employee, shall be employed in any capacity by Consultant herein, or have any other direct or indirect financial interest in this Agreement. No officer or employee of the Consultant who may financially benefit from the performance of work hereunder shall in any way participate in the LA-RICS Authority's approval, or ongoing evaluation, of such work, or in any way attempt to unlawfully influence the LA-RICS Authority's approval or ongoing evaluation of such work.

The Consultant shall comply with all conflict of interest laws, ordinances, and regulations now in effect or hereafter to be enacted during the term of this Agreement. The Consultant warrants that it is not now aware of any facts that create a conflict of interest. If the Consultant hereafter becomes aware of any facts that might reasonably be expected to create a conflict of interest, it shall immediately

make full written disclosure of such facts to the LA-RICS Authority. Full written disclosure shall include, but is not limited to, identification of all persons implicated and a complete description of all relevant circumstances. Failure to comply with the provisions of this Paragraph shall be a material breach of this Agreement.

16. Compliance with Federal Grant Funding Requirements

    a. Availability of Funding. Consultant shall comply with all applicable federal grant funding requirements set forth in Attachment 4 (Grant Funding Requirements). Funding for all periods of this Agreement is subject to the continuing availability of federal grants or other funds for the LA-RICS project. This Agreement may be terminated for convenience in whole or in part upon a loss or reduction of grant funds or other applicable funding resources.

    b. Consultant shall comply with all requirements to the extent applicable to Consultant and necessary for the LA-RICS Authority, or any of its member agencies, to comply with and to qualify for funding resources and receive funds, including but not limited to those funds and resources identified in Attachment 4 (Grant Funding Requirements), as such Attachment may be updated or modified from time to time, for expenditures under this Agreement. Without altering the foregoing responsibilities, the Authority may update or modify Attachment 4 (Grant Funding Requirements) if required to by law or the federal grantor, from time to time, by way of amendment(s). In the event any such change impacts the scope and/or cost of the Work, Consultant shall be entitled to request an amendment to cover any approved cost increase.

    c. Funding Disallowance. To the extent that funds are disallowed as a result of Consultant's or its subconsultants' acts and/or omissions inconsistent with its obligations under this Agreement, and to the extent not caused by a force majeure or the acts and/or omissions of the LA-RICS Authority, Consultant shall remain responsible to the LA-RICS Authority for any and all deliverables and other work, but the LA-RICS Authority shall have no payment obligation to the Consultant to the extent of such disallowed funds.

17. Reserved

18. Background and Security Investigations

    a. Each of Contractor's staff performing services under this Agreement, who is in a designated sensitive position, as determined by LA-RICS Authority in LA-RICS Authority's sole discretion, shall undergo and pass a background investigation to the satisfaction of LA-RICS Authority as a condition of beginning and continuing to perform services under this Agreement. Such background investigation must be obtained through fingerprints submitted to the California Department of Justice to include State, local, and federal-level review, which may include, but shall not be limited to, criminal conviction information. The fees associated with the background investigation shall be at the expense of the Contractor,

regardless of whether the member of Contractor's staff passes or fails the background investigation.

b. If a member of Contractor's staff does not pass the background investigation, LA-RICS Authority may request that the member of Contractor's staff be removed immediately from performing services under the Agreement. Contractor shall comply with LA-RICS Authority's request at any time during the term of the Agreement. LA-RICS Authority will not provide to Contractor or to Contractor's staff any information obtained through the LA-RICS Authority's background investigation.

c. LA-RICS Authority, in its sole discretion, may immediately deny or terminate facility access to any member of Contractor's staff that does not pass such investigation to the satisfaction of the LA-RICS Authority or whose background or conduct is incompatible with LA-RICS Authority facility access.

d. Disqualification of any member of Contractor's staff pursuant to this Paragraph shall not relieve Contractor of its obligation to complete all work in accordance with the terms and conditions of this Agreement.

19. Consultant Responsibility and Debarment

Consultant is subject to and shall fully comply with County of Los Angeles non-responsibility and debarment (Chapter 2.202 of the County Code) requirements and federal debarment (45 C.F.R. Part 76) requirements. These provisions are included in this Agreement and are hereby incorporated herein by this reference.

20. Consultant's Acknowledgement of County's Commitment to the Safely Surrendered Baby Law and Notice to Employees Regarding the Safely Surrendered Baby Law

The Consultant acknowledges that the County places a high priority on the implementation of the Safely Surrendered Baby Law. The Consultant understands that it is the County's policy to encourage all County Consultants to voluntarily post the County's "Safely Surrendered Baby Law" poster in a prominent position at the Consultant's place of business. The Consultant will also encourage its Subconsultants, if any, to post this poster in a prominent position in the Subconsultant's place of business. The County's Department of Children and Family Services will supply the Consultant with the poster to be used. Information on how to receive the poster can be found on the Internet at www.babysafela.orgwww.babysafela.org.

The Consultant shall notify and provide to its employees, and shall require each Subconsultant to notify and provide to its employees, a fact sheet regarding the Safely Surrendered Baby Law, its implementation in Los Angeles County, and where and how to safely surrender a baby. The fact sheet is available on the Internet at www.babysafela.orgwww.babysafela.org for printing purposes.

21. Contractor's Warranty of Adherence to County's Child Support Compliance Program

Contractor acknowledges that County has established a goal of ensuring that all individuals who benefit financially from County or LA-RICS Authority through contracts are in compliance with their court-ordered child, family, and spousal support obligations in order to mitigate the economic burden otherwise imposed upon County, LA-RICS Authority and its taxpayers.

As required by County's Child Support Compliance Program (County Code Chapter 2.200) and without limiting Contractor's duty under this Agreement to comply with all applicable provisions of law, Contractor warrants that it is now in compliance and shall during the term of this Agreement maintain compliance with employment and wage reporting requirements as required by the Federal Social Security Act (42 USC Section 653a) and California Unemployment Insurance Code Section 1088.5, and shall implement all lawfully served Wage and Earnings Withholding Orders or District Attorney Notices of Wage and Earnings Assignment for Child or Spousal Support, pursuant to Code of Civil Procedure Section 706.031 and Family Code Section 5246(b).

Failure of Contractor to maintain compliance with these requirements shall constitute a default by Contractor under this Agreement.

22. LA-RICS Authority's Quality Assurance Plan

The LA-RICS Authority, or its agent, will monitor the Consultant's performance under this Agreement on not less than an annual basis. Such monitoring will include assessing Consultant's compliance with all Agreement terms and conditions and performance standards. Consultant deficiencies which LA-RICS Authority determines are significant or continuing, and that may place performance of the Agreement in jeopardy if not corrected, will be reported to the Board and listed in the appropriate contractor performance database. The report to the Board will include improvement/corrective action measures taken by the LA-RICS Authority and Consultant. If improvement does not occur consistent with the corrective action measures, LA-RICS Authority may terminate this Agreement or impose other penalties as specified in this Agreement.

23. LA-RICS Authority Rights

The LA-RICS Authority may employ, either during or after performance of this Agreement, any right of recovery the LA-RICS Authority may have against the Consultant by any means it deems appropriate including, but not limited to, set-off, action at law or in equity, withholding, recoupment, or counterclaim. The rights and remedies of the LA-RICS Authority under this Agreement are in addition to any right or remedy provided by California law.

24. Damage to LA-RICS Authority or its Member Agencies' Facilities, Buildings Grounds

    a. When applicable, the Consultant shall repair, or cause to be repaired, at its own cost, any and all damage to LA-RICS Authority or its member agencies facilities, buildings, or grounds caused by the Consultant or employees or agents of the Consultant. Such repairs shall be made immediately after the Consultant has become aware of such damage, but in no event later than thirty (30) days after the occurrence.

    b. If the Consultant fails to make timely repairs, LA-RICS Authority or its member agencies may make any necessary repairs. All costs incurred by LA-RICS Authority or its member agencies, as determined by LA-RICS Authority, for such repairs shall be repaid by the Consultant by cash payment upon demand.

25. Employment Eligibility Verification

    Consultant warrants that it fully complies with all Federal statutes and regulations regarding employment of aliens and others, and that all its employees performing services hereunder meet the citizenship or alien status requirements contained in Federal statutes and regulations. Consultant shall obtain, from all covered employees performing services hereunder, all verifications and other documentation of employment eligibility status required by Federal statutes and regulations as they currently exist and as they may be hereafter amended. Consultant shall retain such documentation for all covered employees for the period prescribed by law. Consultant shall indemnify, defend, and hold harmless LA-RICS Authority, its member agencies in the LA-RICS Authority, directors, appointed officers, employees and agents from employer sanctions and any other liability which may be assessed against Consultant or LA-RICS Authority in connection with any alleged violation of Federal statutes or regulations pertaining to the eligibility for employment of persons performing services under this Agreement.

26. Facsimile/Electronic Representations

    The LA-RICS Authority and the Consultant hereby agree to regard facsimile/electronic representations of original signatures of authorized officers of each party, when appearing in appropriate places on the amendments prepared, and received via communications facilities, as legally sufficient evidence that such original signatures have been affixed to amendments to this Agreement, such that the parties need not follow up facsimile/electronic transmissions of such documents with subsequent (non-facsimile/electronic) transmission of "original" versions of such documents.

27. Fair Labor Standards

    Consultant shall comply with all applicable provisions of the Federal Fair Labor Standards Act, and shall indemnify, defend, and hold harmless LA-RICS Authority, its member agencies in the LA-RICS Authority, directors, appointed officers,

employees and agents from any and all liability including, but not limited to, wages, overtime pay, liquidated damages, penalties, court costs, and attorneys' fees arising under any wage and hour law including, but not limited to, the Federal Fair Labor Standards Act for services performed by Consultant's employees for which LA-RICS Authority may be found jointly or solely liable.

28. Force Majeure

a. Neither party shall be liable for such party's failure to perform its obligations under and in accordance with this Agreement, if such failure arises out of fires, floods, epidemics, quarantine restrictions, other natural occurrences, strikes, lockouts (other than a lockout by such party or any of such party's subconsultants), freight embargoes, or other similar events to those described above, but in every such case the failure to perform must be totally beyond the control and without any fault or negligence of such party (such events are referred to in this Paragraph as "force majeure events").

b. Notwithstanding the foregoing, a default by a subconsultant of Consultant shall not constitute a force majeure event, unless such default arises out of causes beyond the control of both Consultant and such subconsultant, and without any fault or negligence of either of them. In such case, Consultant shall not be liable for failure to perform, unless the goods or services to be furnished by the subconsultant were obtainable from other sources in sufficient time to permit Consultant to meet the required performance schedule. As used in this sub-paragraph, the term "subconsultant" and "subconsultants" mean subconsultants at any tier.

c. In the event Consultant's failure to perform arises out of a force majeure event, Consultant agrees to use commercially reasonable best efforts to obtain goods or services from other sources, if applicable, and to otherwise mitigate the damages and reduce the delay caused by such force majeure event.

29. Governing Law, Jurisdiction, and Venue

This Agreement shall be governed by, and construed in accordance with, the laws of the State of California. The Consultant agrees and consents to the exclusive jurisdiction of the courts of the State of California for all purposes regarding this Agreement and further agrees and consents that venue of any action brought hereunder shall be exclusively in the County of Los Angeles.

30. Independent Consultant Status

This Agreement is by and between LA-RICS Authority and Consultant and is not intended, and shall not be construed, to create the relationship of agent, servant, employee, partnership, joint venture, or association, as between LA-RICS Authority and Consultant. The employees and agents of one party shall not be, or be construed to be, the employees or agents of the other party for any purpose whatsoever.

The Consultant shall be solely liable and responsible for providing to, or on behalf of, all persons performing work pursuant to this Agreement all compensation and benefits. The LA-RICS Authority shall have no liability or responsibility for the payment of any salaries, wages, unemployment benefits, disability benefits, Federal, State, or local taxes, or other compensation, benefits, or taxes for any personnel provided by or on behalf of the Consultant. Consultant understands and agrees that all persons furnishing services to LA-RICS Authority pursuant to this Agreement are, for purposes of Workers' Compensation liability, employees solely of Consultant and not of LA-RICS Authority.

Consultant shall bear the sole responsibility and liability for furnishing workers' compensation benefits to any person for injuries arising from, or connected with, services performed on behalf of Consultant pursuant to this Agreement.

31. Indemnification and Insurance

The Indemnification and Insurance Provisions are set forth in Attachment 2 of this Agreement.

32. Liquidated Damages

a. If, in the judgment of the Executive Director, or his/her designee, the Consultant is deemed to be non-compliant with the terms and obligations assumed hereby, the Executive Director, or his/her designee, at his/her option, in addition to, or in lieu of, other remedies provided herein, may withhold the entire monthly payment or deduct pro rata from the Consultant's invoice for work not performed. A description of the work not performed and the amount to be withheld or deducted from payments to the Consultant from the LA-RICS Authority, will be forwarded to the Consultant by the Executive Director, or his/her designee, in a written notice describing the reasons for said action.

c. If the Executive Director or his/her designee, determines that there are deficiencies in the performance of this Agreement that the Executive Director, or his/her designee, deems are correctable by the Consultant over a certain time span, the Executive Director, or his/her designee, will provide a written notice to the Consultant to correct the deficiency within specified time frames. Should the Consultant fail to correct deficiencies within said time frame, the Executive Director, or his/her designee, may: (a) Deduct from the Consultant's payment, pro rata, those applicable portions of the Monthly Contract Sum; and/or (b) Deduct liquidated damages. The parties agree that it will be impracticable or extremely difficult to fix the extent of actual damages resulting from the failure of the Consultant to correct a deficiency within the specified time frame. The parties hereby agree that under the current circumstances a reasonable estimate of such damages Three Hundred Dollars ($300) per day per infraction, and that the Consultant shall be liable to the LA-RICS Authority for liquidated damages in said amount. Said amount shall be deducted from the LA-RICS Authority's payment

to the Consultant; and/or (c) Upon giving five (5) days' notice to the Consultant for failure to correct the deficiencies, the LA-RICS Authority may correct any and all deficiencies and the total costs incurred by the LA-RICS Authority for completion of the work by an alternate source, whether it be LA-RICS Authority forces or separate private Consultant, will be deducted and forfeited from the payment to the Consultant from the LA-RICS Authority, as determined by the LA-RICS Authority.

d. The action noted in this Paragraph shall not be construed as a penalty, but as adjustment of payment to the Consultant to recover the LA-RICS Authority cost due to the failure of the Consultant to complete or comply with the provisions of this Agreement.

e. This Paragraph shall not, in any manner, restrict or limit the LA-RICS Authority's right to damages for any breach of this Agreement provided by law or as specified in Paragraph b above, and shall not, in any manner, restrict or limit the LA-RICS Authority's right to terminate this Agreement as agreed to herein.

33. Reserved

34. Nondiscrimination and Affirmative Action

a. The Consultant certifies and agrees that all persons employed by it, its affiliates, subsidiaries, or holding companies are and shall be treated equally without regard to or because of race, color, religion, ancestry, national origin, sex, age, physical or mental disability, marital status, or political affiliation, in compliance with all applicable Federal and State anti-discrimination laws and regulations.

b. The Consultant shall certify to, and comply with, the provisions of Consultant's EEO Certification.

c. The Consultant shall take affirmative action to ensure that applicants are employed, and that employees are treated during employment, without regard to race, color, religion, ancestry, national origin, sex, age, physical or mental disability, marital status, or political affiliation, in compliance with all applicable Federal and State anti-discrimination laws and regulations. Such action shall include, but is not limited to: employment, upgrading, demotion, transfer, recruitment or recruitment advertising, layoff or termination, rates of pay or other forms of compensation, and selection for training, including apprenticeship.

d. The Consultant certifies and agrees that it will deal with its subconsultants, bidders, or vendors without regard to or because of race, color, religion, ancestry, national origin, sex, age, physical or mental disability, marital status, or political affiliation.

e. The Consultant certifies and agrees that it, its affiliates, subsidiaries, or holding companies shall comply with all applicable Federal and State laws and regulations to the end that no person shall, on the grounds of race, color, religion, ancestry, national origin, sex, age, physical or mental disability, marital status, or political affiliation, be excluded from participation in, be denied the benefits of, or be otherwise subjected to discrimination under this Agreement or under any project, program, or activity supported by this Agreement.

f. The Consultant shall allow LA-RICS Authority representatives access to the Consultant's employment records during regular business hours to verify compliance with the provisions of this Paragraph when so requested by the LA-RICS Authority.

g. If the LA-RICS Authority finds that any provisions of this Paragraph have been violated, such violation shall constitute a material breach of this Agreement upon which the LA-RICS Authority may terminate or suspend this Agreement. While the LA-RICS Authority reserves the right to determine independently that the anti-discrimination provisions of this Agreement have been violated, in addition, a determination by the California Fair Employment and Housing Commission or the Federal Equal Employment Opportunity Commission that the Consultant has violated Federal or State anti-discrimination laws or regulations shall constitute a finding by the LA-RICS Authority that the Consultant has violated the anti-discrimination provisions of this Agreement.

h. The parties agree that in the event the Consultant violates any of the anti-discrimination provisions of this Agreement, the LA-RICS Authority shall, at its sole option, be entitled to the sum of Five Hundred Dollars ($500) for each such violation pursuant to California Civil Code Section 1671 as liquidated damages in lieu of terminating or suspending this Agreement.

35. Non Exclusivity

Nothing herein is intended nor shall be construed as creating any exclusive arrangement with the Consultant. This Agreement shall not restrict Department from acquiring similar, equal or like goods and/or services from other entities or sources.

36. Notice of Delays

Except as otherwise provided under this Agreement, when either party has knowledge that any actual or potential situation is delaying or threatens to delay the timely performance of this Agreement, that party shall, within one (1) business day, give notice thereof, including all relevant information with respect thereto, to the other party.

37. Notice of Disputes

The Consultant shall bring to the attention of the LA-RICS Authority's Project Manager and/or LA-RICS Authority's Project Manager's Supervisor any dispute between the LA-RICS Authority and the Consultant regarding the performance of services as stated in this Agreement. If the LA-RICS Authority's Project Manager or LA-RICS

Authority's Project Manager's Supervisor is not able to resolve the dispute, the Executive Director or his/her designee shall resolve it.

38. Notice to Employees Regarding the Federal Earned Income Credit

Consultant shall notify its employees, and shall require each subconsultant to notify its employees, that they may be eligible for the Federal Earned Income Credit under the Federal income tax laws. Such notice shall be provided in accordance with the requirement set forth in Internal Revenue Service Notice 1015.

39. Contractor CARD Track/Monitoring Database

The County maintains databases that track/monitor contractor performance history. Information entered into such databases may be used for a variety of purposes, including determining whether the LA-RICS Authority will exercise a contract term extension option.

40. Notices

Any notice required or desired to be given pursuant to this Agreement shall be given in writing and addressed as follows:

LA-RICS AUTHORITY	CONSULTANT
2525 Corporate Place, Suite 100 Monterey Park, California 91754 ATTN: Executive Director, Scott Edson E-mail: Scott.Edson@LA-RICS.org Office: (323) 881-8281	201 South Figueroa Street, Suite 240 Los Angeles, CA 90012 ATTN: Vice President, Mark Miner E-mail: MMiner@deainc.com Office: (213) 337-3680

The address for notice may be changed by giving notice pursuant to this paragraph.

41. Ownership of LA-RICS Authority Materials

a. Consultant and LA-RICS Authority agree that all materials, including but not limited to, designs, specifications, techniques, plans, reports, deliverables, data, photographs, diagrams, maps, images, graphics, text, videos, advertising, software, source codes, website plans and designs, interactive media, drafts, working papers, outlines, sketches, summaries, edited and/or unedited versions of deliverables, and any other materials or information developed under this

Agreement and any and all Intellectual Property rights to these materials, including any copyrights, trademarks, service marks, trade secrets, trade names, unpatented inventions, patent applications, patents, design rights, domain name rights, know-how, and any other proprietary rights and derivatives thereof, are and/or shall be the sole property of LA-RICS Authority (hereafter collectively, "LA-RICS Authority Materials"). Consultant hereby assigns and transfers to LA-RICS Authority all Consultant's right, title and interest in and to all such LA-RICS Authority Materials developed under this Agreement.

Notwithstanding such LA-RICS Authority ownership in the LA-RICS Authority Materials, Consultant may retain possession of working papers and materials prepared by Consultant under this Agreement. During and for a minimum of five years subsequent to the term of this Agreement, LA-RICS Authority shall have the right to inspect any and all such working papers and materials, make copies thereof and use the working papers and materials and the information contained therein.

b. Consultant shall execute all documents requested by LA-RICS Authority and shall perform all other acts requested by LA-RICS Authority to assign and transfer to, and vest in LA-RICS Authority, all Consultant's right, title and interest in and to the LA-RICS Authority Materials, including, but not limited to, any and all copyrights, trademarks, service marks, trade names, unpatented inventions, patent applications, patents, design rights, domain name rights, know-how, and any other proprietary rights and derivatives thereof resulting from this Agreement. LA-RICS Authority shall have the right to register all applicable copyrights, trademarks and patents in the name of the LA-RICS Authority. Further, LA-RICS Authority shall have the right to assign, license, or otherwise transfer any and all LA-RICS Authority's rights, title and interest, including, but not limited to copyrights, trademarks, and patents, in and to the LA-RICS Authority Materials.

c. Consultant represents and warrants that the LA-RICS Authority Materials prepared herein under this Agreement, are the original work of Consultant and do not infringe upon any Intellectual Property or proprietary rights of third parties. For those portions of the LA-RICS Authority Materials that are not the original work of Consultant, Consultant represents and warrants that it has secured all appropriate licenses, rights, and/or permission from appropriate third parties to include such materials in the LA-RICS Authority Materials.

   Consultant shall defend, indemnify and hold LA-RICS Authority harmless against any claims by third parties based on infringement of copyright, patent, trade secret, trademark, or any other claimed Intellectual Property or proprietary right, arising from LA-RICS Authority's use of LA-RICS Authority Materials created and/or prepared by Consultant. Consultant will also indemnify and defend at its sole expense, any action brought against LA-RICS Authority based on a claim that LA-RICS Authority Materials furnished hereunder by Consultant and used

within the scope of this Agreement infringe any copyright, patent, trade secret, trademark, or any other claimed intellectual property or proprietary right of third parties, and Consultant will pay any costs, damages and attorney's fees incurred by LA-RICS Authority. LA-RICS Authority will notify Consultant promptly and in writing of any such action or claim and will permit Consultant to fully participate in the defense thereof.

d. Consultant shall affix the following notice to all LA-RICS Authority Materials: "© Copyright 2018 (or such other appropriate date of first publication), LA-RICS Authority. All Rights Reserved." Consultant shall affix such notice on the title page of all images, photographs, documents and writings, and otherwise as LA-RICS Authority may direct.

e. LA-RICS Authority shall also have the sole right to control the preparation, modification, and revisions to, all acknowledgment and/or attribution language for all LA-RICS Authority Materials resulting from this Agreement. LA-RICS Authority will however, honor requests by Consultant seeking removal of all acknowledgment and/or attribution language relating to the Consultant, should Consultant no longer wish to receive attribution for its work on the LA-RICS Authority Materials.

f. If directed to do so by LA-RICS Authority, Consultant will place the LA-RICS Authority name and LA-RICS Authority logo on LA-RICS Authority Materials developed under this Agreement. Consultant may not, however, use the LA-RICS Authority name and LA-RICS Authority logo on any other materials prepared or developed by Consultant that falls outside the scope of this Agreement.

42. <u>Prohibition Against Inducement or Persuasion</u>

Notwithstanding the above, the Consultant and the LA-RICS Authority agree that, during the term of this Agreement and for a period of one year thereafter, neither party shall in any way intentionally induce or persuade any employee of one party to become an employee or agent of the other party. No bar exists against any hiring action initiated through a public announcement.

43. <u>Prohibition from Participation in Future Solicitation(s)</u>

Neither Consultant nor any subsidiary of or subcontractor to Consultant shall participate in any way in any future solicitation conducted by LA-RICS Authority that includes or is based upon any solicitation document that is developed as a result of the services rendered by Consultant under this Agreement. As this prohibition applies to subcontractors of the Consultant, Consultant shall notify any subcontractors providing services under this Agreement of this prohibition before they commence work under this Agreement. Any response to a solicitation submitted by Consultant or by any subsidiary of or subcontractor to Consultant in violation of

this provision shall be rejected by LA-RICS Authority. This provision shall survive the expiration or other termination of this Agreement.

44. Public Records Act

a. Any documents submitted by the Consultant; all information obtained in connection with the LA-RICS Authority's right to audit and inspect the Consultant's documents, books, and accounting records pursuant to Record Retention and Inspection/Audit Settlement Paragraph of this Agreement; as well as those documents which were required to be submitted in response to the Request for Proposals (RFP) used in the solicitation process for this Agreement, become the exclusive property of the LA-RICS Authority. All such documents become a matter of public record and shall be regarded as public records. Exceptions will be those elements in the California Government Code Section 6250 et seq. (Public Records Act) and which are marked "trade secret," "confidential," or "proprietary." The LA-RICS Authority shall not in any way be liable or responsible for the disclosure of any such records including, without limitation, those so marked, if disclosure is required by law, or by an order issued by a court of competent jurisdiction.

b. In the event the LA-RICS Authority is required to defend an action on a Public Records Act request for any of the aforementioned documents, information, books, records, and/or contents of a proposal marked "trade secret," "confidential," or "proprietary," the Consultant agrees to defend and indemnify the LA-RICS Authority from all costs and expenses, including reasonable attorney's fees, in an action or liability arising under the Public Records Act.

45. Publicity

a. The Consultant shall not disclose any details in connection with this Agreement to any person or entity except as may be otherwise provided hereunder or required by law. However, in recognizing the Consultant's need to identify its services and related clients to sustain itself, the LA-RICS Authority shall not inhibit the Consultant from publishing its role under this Agreement within the following conditions:

   i. The Consultant shall develop all publicity material in a professional manner; and

   ii. During the term of this Agreement, the Consultant shall not, and shall not authorize another to, publish or disseminate any commercial advertisements, press releases, feature articles, or other materials using the name of the LA-RICS Authority without the prior written consent of the Executive Director or his/her designee. The LA-RICS Authority shall not unreasonably withhold written consent.

b. The Consultant may, without the prior written consent of LA-RICS Authority,

indicate in its proposals and sales materials that it has been awarded this Agreement with the LA-RICS Authority of Los Angeles, provided that the requirements of this Paragraph shall apply.

46. Record Retention and Inspection/Audit Settlement

The Consultant shall maintain accurate and complete financial records of its activities and operations relating to this Agreement in accordance with generally accepted accounting principles. The Consultant shall also maintain accurate and complete employment and other records relating to its performance of this Agreement. The Consultant agrees that the LA-RICS Authority, or its authorized representatives, shall have access to and the right to examine, audit, excerpt, copy, or transcribe any pertinent transaction, activity, or record relating to this Agreement. All such material, including, but not limited to, all financial records, bank statements, cancelled checks or other proof of payment, timecards, sign-in/sign-out sheets and other time and employment records, and proprietary data and information, shall be kept and maintained by the Consultant and shall be made available to the LA-RICS Authority during the term of this Agreement and for a period of five (5) years thereafter unless the LA-RICS Authority's written permission is given to dispose of any such material prior to such time. All such material shall be maintained by the Consultant at a location in Los Angeles County, provided that if any such material is located outside Los Angeles County, then, at the LA-RICS Authority's option, the Consultant shall pay the LA-RICS Authority for travel, per diem, and other costs incurred by the LA-RICS Authority to examine, audit, excerpt, copy, or transcribe such material at such other location.

a. In the event that an audit of the Consultant is conducted specifically regarding this Agreement by any Federal or State auditor, or by any auditor or accountant employed by the Consultant or otherwise, then the Consultant shall file a copy of such audit report with the LA-RICS Authority's Auditor-Controller within thirty (30) days of the Consultant's receipt thereof, unless otherwise provided by applicable Federal or State law or under this Agreement. Subject to applicable law, the LA-RICS Authority shall make a reasonable effort to maintain the confidentiality of such audit report(s).

b. Failure on the part of the Consultant to comply with any of the provisions of this Paragraph shall constitute a material breach of this Agreement upon which the LA-RICS Authority may terminate or suspend this Agreement.

c. If, at any time during the term of this Agreement or within five (5) years after the expiration or termination of this Agreement, representatives of the LA-RICS Authority conduct an audit of the Consultant regarding the work performed under this Agreement, and if such audit finds that the LA-RICS Authority's dollar liability for any such work is less than payments made by the LA-RICS Authority to the Consultant, then the difference shall be either: a) repaid by the Consultant to the LA-RICS Authority by cash payment upon demand or b) at the sole option of the

LA-RICS Authority's Auditor-Controller, deducted from any amounts due to the Consultant from the LA-RICS Authority, whether under this Agreement or otherwise. If such audit finds that the LA-RICS Authority's dollar liability for such work is more than the payments made by the LA-RICS Authority to the Consultant, then the difference shall be paid to the Consultant by the LA-RICS Authority by cash payment, provided that in no event shall the LA-RICS Authority's maximum obligation for this Agreement exceed the funds appropriated by the LA-RICS Authority for the purpose of this Agreement.

47. Reserved

48. Subcontracting

a. The requirements of this Agreement may not be subcontracted by the Consultant without the advance approval of the LA-RICS Authority. Subconsultants listed in the Consultant's Proposals are approved by LA-RICS Authority, unless otherwise indicated by LA-RICS Authority. Any attempt by the Consultant to subcontract without the prior consent of the LA-RICS Authority may be deemed a material breach of this Agreement.

b. If the Consultant desires to subcontract, the Consultant shall provide the following information promptly at the LA-RICS Authority's request.

- A description of the work to be performed by the Subconsultant;
- A draft copy of the proposed subcontract; and
- Other pertinent information and/or certifications requested by the LA-RICS Authority.

c. The Consultant shall indemnify and hold the LA-RICS Authority harmless with respect to the activities of each and every Subconsultant in the same manner and to the same degree as if such Subconsultant(s) were the Consultant employees.

d. The LA-RICS Authority does not have contractual privity with the subconsultant. The Consultant shall remain fully responsible for all performances required of it under this Agreement, including those that the Consultant has determined to subcontract. Consultant shall remain fully responsible for services rendered by any subconsultant pursuant to a subcontract between the Consultant and subconsultant.

e. The Consultant shall be solely liable and responsible for all payments or other compensation to all Subconsultants and their officers, employees, agents, and successors in interest arising through services performed hereunder, notwithstanding the LA-RICS Authority's consent to subcontract.

f. The Consultant shall obtain certificates of insurance, which establish that the Subconsultant maintains all the programs of insurance required by the LA-RICS

Authority from each approved Subconsultant. The Consultant shall ensure delivery of all such documents to:

2525 Corporate Place, Suite 100
Monterey Park, California 91754
ATTN: Executive Director, Scott Edson
E-mail: Scott.Edson@LA-RICS.org
Office: (323) 881-8281

before any Subconsultant employee may perform any work hereunder.

49. Supplemental/Amendment

a. For any change which affects the scope of work, Term, Contract Sum, payments, or any term or condition included under this Agreement, a Supplement or an Amendment shall be prepared and executed by the Consultant and by Executive Director.

b. The LA-RICS Authority's Board of Directors may require the addition and/or change of certain terms and conditions in the Agreement during the term of this Agreement. The LA-RICS Authority reserves the right to add and/or change such provisions as required by the LA-RICS Authority's Board of Directors. To implement such changes, a Supplement or an Amendment to the Agreement shall be prepared and executed by the Consultant and by the Executive Director.

50. Termination for Breach of Warranty to Maintain Compliance with LA-RICS Authority's Child Support Compliance Program

Failure of the Contractor to maintain compliance with the requirements set forth in Contractor's Warranty of Adherence to LA-RICS Authority's Child Support Compliance Program Paragraph, shall constitute default under this Agreement. Without limiting the rights and remedies available to the LA-RICS Authority under any other provision of this Agreement, failure of the Contractor to cure such default within ninety (90) calendar days of written notice shall be grounds upon which the LA-RICS Authority may terminate this Agreement pursuant to Termination for Default and pursue debarment of the Contractor, pursuant to County Code Chapter 2.202.

51. Termination for Breach of Warranty to Maintain Compliance with County's Defaulted Property Tax Reduction Program.

Failure of Contractor to maintain compliance with the requirements set forth in "Contractor's Warranty of Compliance with County's Defaulted Property Tax Reduction Program" shall constitute default under this contract. Without limiting the rights and remedies available to LA-RICS Authority under any other provision of this Agreement, failure of Contractor to cure such default within 10 days of notice shall be grounds upon which LA-RICS Authority may terminate this contract and/or pursue debarment of Contractor, pursuant to County Code Chapter 2.206.

52. Termination for Convenience

a. This Agreement may be terminated, in whole or in part, when such action is deemed by the LA-RICS Authority, in its sole discretion, to be in its best interest. Termination of work hereunder shall be effected by notice of termination to the Consultant specifying the extent to which performance of work is terminated and the date upon which such termination becomes effective. The date upon which such termination becomes effective shall be no less than three (3) days after the notice is sent.

b. After receipt of a notice of termination and except as otherwise directed by the LA-RICS Authority, the Consultant shall 1) stop work under this Agreement on the date and to the extent specified in such notice, and 2) complete performance of such part of the work as shall not have been terminated by such notice.

c. All material including books, records, documents, or other evidence bearing on the costs and expenses of the Consultant under this Agreement shall be maintained by the Consultant in accordance with Record Retention and Inspection/Audit Settlement Paragraph.

d. LA-RICS Authority shall not incur any liability to Consultant, other than payment for work already performed, up to the date of termination.

53. Termination for Default

a. The LA-RICS Authority may, by written notice to the Consultant, terminate the whole or any part of this Agreement, if, in the judgment of the Executive Director or his/her designee:

- Consultant has materially breached this Agreement; or
- Consultant fails to timely provide and/or satisfactorily perform any task, deliverable, service, or other work required either under this Agreement; or
- Consultant fails to demonstrate a high probability of timely fulfillment of performance requirements under this Agreement, or of any obligations of this Agreement and in either case, fails to demonstrate convincing progress toward a cure within five (5) working days (or such longer period as the LA-RICS Authority may authorize in writing) after receipt of written notice from the LA-RICS Authority specifying such failure.

b. In the event that the LA-RICS Authority terminates this Agreement in whole or in part as provided in this Paragraph, the LA-RICS Authority may procure, upon such terms and in such manner as the LA-RICS Authority may deem appropriate, goods and services similar to those so terminated. The Consultant shall be liable to the LA-RICS Authority for any and all excess costs incurred by the LA-RICS Authority, as determined by the LA-RICS Authority, for such similar goods and services. The Consultant shall continue the performance of this Agreement to

the extent not terminated under the provisions of this sub-paragraph.

c. Except with respect to defaults of any Subconsultant, the Consultant shall not be liable for any such excess costs of the type identified in above sub-paragraph if its failure to perform this Agreement arises out of causes beyond the control and without the fault or negligence of the Consultant. Such causes may include, but are not limited to: acts of God or of the public enemy, acts of the LA-RICS Authority in either its sovereign or contractual capacity, acts of Federal or State governments in their sovereign capacities, fires, floods, epidemics, quarantine restrictions, strikes, freight embargoes, and unusually severe weather; but in every case, the failure to perform must be beyond the control and without the fault or negligence of the Consultant. If the failure to perform is caused by the default of a Subconsultant, and if such default arises out of causes beyond the control of both the Consultant and Subconsultant, and without the fault or negligence of either of them, the Consultant shall not be liable for any such excess costs for failure to perform, unless the goods or services to be furnished by the Subconsultant were obtainable from other sources in sufficient time to permit the Consultant to meet the required performance schedule. As used in this Paragraph, the term "Subconsultant(s)" means Subconsultant(s) at any tier.

d. If, after the LA-RICS Authority has given notice of termination under the provisions of this Paragraph, it is determined by the LA-RICS Authority that the Consultant was not in default under the provisions of this Paragraph, or that the default was excusable under the provisions of Paragraph, the rights and obligations of the parties shall be the same as if the notice of termination had been issued pursuant to Termination for Convenience Paragraph.

e. The rights and remedies of the LA-RICS Authority provided in this Paragraph shall not be exclusive and are in addition to any other rights and remedies provided by law or under this Agreement.

54. <u>Termination for Improper Consideration</u>

LA-RICS Authority may, by written notice to Consultant, immediately terminate the right of Consultant to proceed under this Agreement if it is found that consideration, in any form, was offered or given by Consultant, either directly or through an intermediary, to any LA-RICS Authority officer, employee, or agent with the intent of securing the Agreement or securing favorable treatment with respect to the award, amendment, or extension of the Agreement or the making of any determinations with respect to Consultant's performance pursuant to the agreement. In the event of such termination, LA-RICS Authority shall be entitled to pursue the same remedies against Consultant as it could pursue in the event of default by Consultant.

Consultant shall immediately report any attempt by a County or LA-RICS Authority officer or employee to solicit such improper consideration. The report shall be made either to County or LA-RICS Authority manager charged with the supervision of the

employee or to County Auditor-Controller's Employee Fraud Hotline at (213) 974-0914 or (800) 544-6861.

Among other items, such improper consideration may take the form of cash, discounts, service, the provision of travel or entertainment, or tangible gifts.

55. Termination for Insolvency

a. The LA-RICS Authority may terminate this Agreement forthwith in the event of the occurrence of any of the following: 1) Insolvency of the Consultant. The Consultant shall be deemed to be insolvent if it has ceased to pay its debts for at least sixty (60) days in the ordinary course of business or cannot pay its debts as they become due, whether or not a petition has been filed under the Federal Bankruptcy Code and whether or not the Consultant is insolvent within the meaning of the Federal Bankruptcy Code; 2) The filing of a voluntary or involuntary petition regarding the Consultant under the Federal Bankruptcy Code; 3) The appointment of a Receiver or Trustee for the Consultant; or 4) The execution by the Consultant of a general assignment for the benefit of creditors.

b. The rights and remedies of the LA-RICS Authority provided in this Paragraph shall not be exclusive and are in addition to any other rights and remedies provided by law or under this Agreement.

56. Termination for Non-Adherence of County Lobbyist Ordinance

The Contractor, and each County Lobbyist or County Lobbying firm as defined in County Code Section 2.160.010 retained by the Contractor, shall fully comply with the County's Lobbyist Ordinance, County Code Chapter 2.160. Failure on the part of the Contractor or any County or LA-RICS Authority Lobbyist or County or LA-RICS Authority Lobbying firm retained by the Contractor to fully comply with the County's Lobbyist Ordinance shall constitute a material breach of this Agreement, upon which the LA-RICS Authority may in its sole discretion, immediately terminate or suspend this Agreement.

57. Termination For Non-Appropriation of Funds

Notwithstanding any other provision of this Agreement, the LA-RICS Authority shall not be obligated for the Consultant's performance hereunder or by any provision of this Agreement during any of the LA-RICS Authority's future fiscal years unless and until the LA-RICS Authority's Board of Directors appropriates funds for this Agreement in the LA-RICS Authority's Budget for each such future fiscal year. In the event that funds are not appropriated for this Agreement, then this Agreement shall terminate as of June 30 of the last fiscal year for which funds were appropriated. The LA-RICS Authority shall notify the Consultant in writing of any such non-allocation of funds at the earliest possible date.

58. Time Off for Voting

The Consultant shall notify its employees, and shall require each subconsultant to notify and provide to its employees, information regarding the time off for voting law (Elections Code Section 14000). Not less than 10 days before every statewide election, every Consultant and subconsultants shall keep posted conspicuously at the place of work, if practicable, or elsewhere where it can be seen as employees come or go to their place of work, a notice setting forth the provisions of Section 14000.

59. Warranty of Compliance with County's Defaulted Property Tax Reduction Program

Contractor acknowledges that County has established a goal of ensuring that all individuals and businesses that benefit financially from County through contract are current in paying their property tax obligations (secured and unsecured roll) in order to mitigate the economic burden otherwise imposed upon County and its taxpayers.

Unless Contractor qualifies for an exemption or exclusion, Contractor warrants and certifies that to the best of its knowledge it is now in compliance, and during the term of this contract will maintain compliance, with Los Angeles County Code Chapter 2.206.

60. Validity

If any provision of this Agreement or the application thereof to any person or circumstance is held invalid, the remainder of this Agreement and the application of such provision to other persons or circumstances shall not be affected thereby.

61. Waiver

No waiver by the LA-RICS Authority of any breach of any provision of this Agreement shall constitute a waiver of any other breach or of such provision. Failure of the LA-RICS Authority to enforce at any time, or from time to time, any provision of this Agreement shall not be construed as a waiver thereof. The rights and remedies set forth in this Paragraph shall not be exclusive and are in addition to any other rights and remedies provided by law or under this Agreement.

62. Warranty Against Contingent Fees

a. The Contractor warrants that no person or selling agency has been employed or retained to solicit or secure this Agreement upon any Agreement or understanding for a commission, percentage, brokerage, or contingent fee, excepting bona fide employees or bona fide established commercial or selling agencies maintained by the Contractor for the purpose of securing business.

b. For breach of this warranty, the LA-RICS Authority shall have the right to terminate this Agreement and, at its sole discretion, deduct from the Agreement

price or consideration, or otherwise recover, the full amount of such commission, percentage, brokerage, or contingent fee.

63. Prevailing Wage Requirements

This work may consist of both prevailing wage and non-prevailing wage work.

a. Prevailing Wages

When applicable, the services provided in this Agreement may constitute "public works" as defined in California Labor Code 1720, and are therefore subject to payment of prevailing wages, compliance monitoring and enforcement by the Department of Industrial Relations (DIR). Further, since the work is federally funded, then federal labor standards, as applicable, including the Davis-Bacon requirements, should also be complied with. Federal wage determinations are available at www.wdol.gov. If federal and state wage rates are both applicable to a craft, classification or type of workers, then the higher of the two wages will prevail.

The Executive Director of the DIR has established the general prevailing rate of per diem wages for each craft, classification, type of worker, or mechanic needed to execute public works and improvements. The current general prevailing wage rate determinations are available at www.dir.ca.gov/dlsr/pwd/index.htm. The Contractor is required to pay its agents and employees the applicable, current prevailing wage rate and is responsible for selecting the classification of workers required to perform this service.

The Contractor agrees to comply with the provisions of Section 1775 of the California Labor Code relating to the payment of prevailing wages, the utilization of apprentices in accordance to LC 1777.5, and the assessment of penalties determined by the California Labor Commissioner. Pursuant to Section 1773.2 of the California Labor Code, copies of the prevailing rate of per diem wages are on file at the LA-RICS Authority and will be made available for inspection by request to the Contract Administrator. Future effective wage rates will be on file with the Department of Industrial Relations. The new wage rates shall become effective on the day following the expiration date of the current determinations and apply to the Agreement in the same manner as if they had been included or referenced in the Agreement.

b. Work Records

The Contractor shall comply with the requirements of Section 1812 of the Labor Code. The Contractor shall maintain an accurate written record of all employees working on the project each calendar day. The record shall include each employee's name, Social Security number, job classification, and the actual number of hours worked.

c. Posting of Notices

The Contractor shall comply with the provisions of Section 1773.2 of the Labor Code. The Contractor shall post a copy of the prevailing wage rates at the worksite and comply with applicable law including posting of jobsite notices required by 8 California Code Reg. §16451(d):

"This public works project is subject to monitoring and investigative activities by the Compliance Monitoring Unit (CMU) of the Division of Labor Standards Enforcement, Department of Industrial Relations, State of California. This Notice is intended to provide information to all workers employed in the execution of the Contract for public work and to all contractors and other persons having access to the jobsite to enable the CMU to ensure compliance with and enforcement of prevailing wage laws on public works projects.

The prevailing wage laws require that all workers be paid at least the minimum hourly wage as determined by the Director of Industrial Relations for the specific classification (or type of work) performed by workers on the project. These rates are listed on a separate jobsite posting of minimum prevailing rates required to be maintained by the public entity, which awarded the public works Contract. Complaints concerning nonpayment of the required minimum wage rates to workers on this project may be filed with the CMU at any office of the Division of Labor Standards Enforcement (DLSE).

Local Office Telephone Number:

Division of Labor Standards Enforcement Office
320 West Fourth Street, Suite 450
Los Angeles, CA 90013
(213) 620-6330

Complaints should be filed in writing immediately upon discovery of any violations of the prevailing wage laws due to the short period of time following the completion of the project that the CMU may take legal action against those responsible.

Complaints should contain details about the violations alleged (for example, wrong rate paid, not all hours paid, overtime rate not paid for hours worked in excess of 8 hours per day or 40 hours per week, etc.) as well as the name of the employer, the public entity which awarded the public works Contract, and the location and name of the project.

For general information concerning the prevailing wage laws and how to file a complaint concerning any violation of these prevailing wage laws, you may contact any DLSE office. Complaint forms are also available at the Department of Industrial Relations website found at http://www.dir.ca.gov/Public-Works/PublicWorks.html*."*

d. Certified Payroll Records

The Contractor shall comply with the requirements of Section 1776 of the Labor Code. Contractor and Subcontractors, if any, must furnish certified payroll records directly to the Labor Commissioner (aka Division of Labor Standards Enforcement) in a format prescribed by the Labor Commissioner.

e. When requested by the LA-RICS Authority, electronic certified payroll records must be submitted to the LA-RICS Authority, through an online system designated by the LA-RICS Authority.

64. Mental Health Services for Critical Incidents

In the event of a serious accident on the Project site, the Los Angeles County Department of Mental Health (DMH) will, if requested, respond. The response may be within a few hours or as long as a few days after the incident, depending on when the request was made. The services DMH will provide include crisis intervention, normalization of the stress response that survivors may be experiencing, stress management techniques and resources if the stress reactions increase in frequency or intensity. Requests for services may be made by calling the DMH Emergency Outreach Bureau Deputy Director, (213) 738-4924, during normal business hours or the ACCESS Center, (800) 854-7771, evenings, holidays, and weekends.

65. Reserved

66. Compliance with County's Zero Tolerance Human Trafficking

Contractor acknowledges that the County has established a Zero Tolerance Human Trafficking Policy prohibiting contractors from engaging in human trafficking.

If a Contractor or member of Contractor's staff is convicted of a human trafficking offense, the County shall require that the Contractor or member of Contractor's staff be removed immediately from performing services under the Contract. County will not be under any obligation to disclose confidential information regarding the offenses other than those required by law.

Disqualification of any member of Contractor's staff pursuant to this paragraph shall not relieve Contractor of its obligation to complete all work in accordance with the terms and conditions of this Contract.

67. Additional Architectural/Engineering (A/E) Provisions

Definitions

The parties hereto agree to the following definitions:

67.1 Schematic Design Phase shall mean all services incident to drawings, specifications, estimates, and other data more fully described in Article 68.2.

67.2 Design Development Phase shall mean all services incident to drawings, specifications, estimates, renderings, and other data more fully described in Article 68.3.

67.3 Construction Documents Phase shall mean all services incident to drawings, specifications, clarification documents, and other data more fully described in Article 68.4.

67.4 Bidding Phase shall mean services incident to drawings, specifications, clarification documents, and other data more fully described in Article 68.5.

67.5 Construction Administration Phase shall mean all services incident to drawings, specifications, schedules, shop drawings, and other data more fully described in Article 68.6.

67.6 Jurisdictional Agencies shall mean governmental agencies having regulatory function under the law in respect to the design, erection, or operation of structures in general or in structures or parts thereof described in the scope of the project.

68. Basic Services of A/E

68.1 General

A/E shall:

68.1.1 Consult (and attend and prepare minutes of all necessary consultations and conferences) to the extent required by LA-RICS Authority with authorized employees and representatives of LA-RICS Authority relative to the design and construction of the Project.

68.1.2 Cooperate with other professionals employed by LA-RICS Authority to perform services related to the Project.

68.1.3 Advise Executive Director as to the necessity and manner of providing or obtaining services related to the site, such as: property boundary, right of way, topographic, hydrographic and utility surveys, soil mechanics, and subsoil data.

68.1.4 Review site surveys, subsoil data, chemical, mechanical, and other data logs of borings, and similar information, and advise LA-RICS Authority whether such data is sufficient for purposes of

design, or whether additional data is necessary before A/E can proceed with design.

68.1.5 Discuss with Executive Director any of LA-RICS Authority's requirements and procedures affecting its construction projects which, in the opinion of A/E, would not lead to the best results when applied to the Project.

68.1.6 Develop a cost-effective approach for each site and the Project.

68.1.7 Correct or revise, without additional cost to LA-RICS Authority, any errors or deficiencies in A/E's services furnished under this Agreement.

68.1.8 Perform professional services in accordance with public laws, ordinances, and regulations applicable to the Project to be performed under this Agreement.

68.1.9 Contract for or employ at A/E's expense, customary consultants to A/E such as architects, mechanical, electrical, structural, and civil engineers to the extent A/E deems necessary for design of the Project and subject to approval of Executive Director. Each such consultant rendering professional services under this Agreement shall be duly licensed to practice under the appropriate laws of the State of California and shall be approved by Executive Director. Neither approval by Executive Director, nor any of the foregoing procedures, shall create any contractual relationship between LA-RICS Authority and any consultant employed by A/E.

68.1.10 Designate as the Project Manager a principal or member of A/E's staff who shall be approved by Executive Director and who shall be in charge of the services for the Project commencing with the preparation of Schematic Designs through the completion of construction so long as such Project Manager's performance is acceptable to Executive Director.

68.1.11 Designate by letter addressed to Executive Director or his/her designee, persons authorized to sign letters, papers, and other documents relative to the services to be performed herein on behalf of A/E.

68.1.12 Abide by County's A/E Manual dated March 1, 1996, and Addendum 1, dated June 1, 2016, as revised or amended, Design Build Manual for Design-Builder dated June 14, 2016, and Design Build Manual for Scoping Professional dated September 29,

2009, and all regulations imposed by LA-RICS Authority determined funding sources including, but not limited to, auditing requirements and payroll affidavits.

68.1.13 The books, papers, records, and accounts of A/E, insofar as they relate to charges for services, or in any way connected with services herein contemplated, shall be open during reasonable business hours to inspection and audit by the authorized employees and representatives of LA-RICS Authority. Said records shall be retained for a minimum of five years after completion of services.

68.1.14 In compliance with the Los Angeles County Municipal Storm Water National Pollutant Discharge Elimination System (NPDES) permit, the Project type, if included in the County's Development Planning for Storm Water Management manual, is required to comply with the Standard Urban Storm Water Mitigation Plan (SUSMP), which was approved by the Los Angeles Regional Water Quality Control Board on March 8, 2000. The A/E shall prepare a drainage concept and storm water quality plan for the Project in accordance with the SUSMP requirements.

68.1.15 The A/E will use the latest version of Microsoft Project for project scheduling, project management and document management.

68.1.16 A/E shall deliver to Executive Director fully completed Construction Documents. The working drawings shall be made on high-grade paper with pencil or ink (AutoCAD/printed hard copy), or shall be reproductions on material of such quality as will remain permanent for production of legible prints. Size and quality of transparencies shall be as instructed by Executive Director and samples shall be submitted to Executive Director for approval.

68.2 <u>Schematic Design Phase</u>

Upon authorization by Executive Director to proceed with Schematic Design Phase, A/E shall:

68.2.1 In consultation with Executive Director, receive from LA-RICS Authority the approved program, budget, and other requirements of the Project.

68.2.2 Prepare Schematic Design studies incorporating the program requirements and including site plans, floor plans, elevations, sections, and other drawings necessary to describe the Project.

Schematic studies shall be revised by A/E until an acceptable design concept has been approved by Executive Director.

68.2.3 Prepare outline specifications in sufficient detail and in a form satisfactory to Executive Director to permit an analysis of the proposed construction; criteria and performance standards of materials and methods of construction specified; a tabulation of both gross and assignable floor areas; and a comparison to the initial program area requirements and other criteria.

68.2.4 Prepare a written Schematic Phase Project construction cost estimate specifying ENR index used.

68.3 Design Development Phase

Upon authorization by Executive Director to proceed with the Design Development Phase, A/E shall:

68.3.1 Based on the approved schematics, prepare plot plans, architectural, structural, mechanical, and electrical floor plans; elevations; cross-sections and other required drawings; and outline specifications describing the size, character, and quality of the entire project in its essentials as to kinds and locations of materials, and type of structural, mechanical, and electrical systems.

68.3.2 Prepare a construction cost estimate in material and labor breakdown form based on the Design Development drawings and specifications.

68.3.3 The information in the Design Development Phase shall be sufficiently complete to cover all matters which will materially affect the cost of the Project, and all essential operational requirements of the project program.

68.3.4 Reserved.

68.3.5 Revise Design Development documents to the satisfaction of Executive Director or his/her designee.

68.4 Construction Documents Phase

Upon authorization by Executive Director to proceed with Construction Documents, A/E shall:

68.4.1 Based on the approved Design Development, prepare Construction Documents consisting of working drawings, specifications and computations in a form satisfactory to Executive Director, and secure required approvals and permits. Prepare Construction Documents in full compliance with applicable building codes, ordinances, and other regulatory authorities. Submit to LA-RICS Authority for final review.

68.4.2 Prepare a construction cost estimate in a material and labor breakdown form based on completed Construction Documents. The estimate shall itemize basic and alternate costs in conformance with the Form of Proposal intended for bidding purposes.

68.4.3 Submit final Construction Documents, including all necessary corrections, which shall present a clear and complete coverage of the Project for the proper submittal of bids and the orderly expeditious construction of the Project.

68.4.4 Prepare supplementary conditions, general requirements, forms of bid proposal, and other documents in such detail as may be required to obtain competitive bidding for the entire Project or any division of the Project and incorporating LA-RICS Authority standard documents and/or documents of appropriate authorities as furnished by Executive Director.

68.5 Bidding Phase

Upon solicitation of bids by LA-RICS Authority, A/E shall:

68.5.1 Prepare clarification documents for release by Executive Director as required.

68.5.2 Assist Executive Director with review, evaluation, and recommendations for awarding construction Agreement.

68.5.3 Assist the Department in solicitations of the Project, if requested.

68.5.4 Attend pre-bid meetings as required, if requested.

68.6 Construction Administration Phase

Upon award of construction Agreement by LA-RICS Authority, A/E shall:

68.6.1 Make periodic (at a minimum, weekly) visits to the Project to ascertain the progress of the Project and its general compliance

with Construction Documents; attend project meetings. A/E shall also visit the Project promptly whenever requested to do so by Executive Director. A/E shall not be responsible for construction means, methods, techniques, sequences or procedures, or for safety precautions and programs in connection with the Project, and shall not be responsible for the Contractor's failure to carry out the Project in accordance with the Agreement documents.

68.6.2 Interpret the Construction Documents and furnish one copy in reproducible form of any clarification drawings and other documentation required. Prepare a recommendation on appropriateness of change orders to Construction Documents as necessary as a result of interpretations and/or clarifications. Recommendation shall be based on compliance with codes and the specifications of the Project.

68.6.3 Reserved.

68.6.4 Make monthly reports in writing to Executive Director as to the progress of the Project by the contractor and to furnish other customary reports as and when requested by Executive Director.

68.6.5 Authorize necessary addition or deletion of items of work covered by unit prices in the construction Agreement when determined to be necessary and previously approved by Executive Director.

68.6.6 Review and approve all submittals by the Contractor, including shop drawings, product data, and samples for conformance with design concept and Agreement documents. All reviews will be accomplished in a timely manner so as to cause no delays in the work.

68.6.7 Reserved.

68.6.8 Reserved.

68.6.9 Review and advise Executive Director or his/her designee, as to the acceptability of the substitutions proposed by construction contractor.

68.6.10 Reserved.

68.6.11 Reserved.

68.6.12 Participate in the final acceptance inspections of the Project and advise LA-RICS Authority as to the acceptability of work performed by construction contractor.

68.6.13 Record Documents

68.6.13.1 The A/E shall verify and incorporate all as-built conditions represented on the job-site As-Built drawings, as noted by the Contractor, into a final record set. A/E shall keep one (1) complete up-to-date set of drawings in an electronic format at all times in his/her office, reserved for use as a set of record drawings. The electronic format set is the original CAD generated drawings used to print the bid set drawings. Throughout the duration of the construction work, it shall be the responsibility of the A/E to maintain a record of all changes in the work electronically on the record set. Updates to the Agreement drawings and specifications may include, but are not limited to, underground utility runs, which are installed in locations other than those indicated in the Agreement drawings and those lines that have been indicated as to be field run as located. The lines shall be located on the electronic-format record drawings dimensionally from a fixed point, such as a street-curb line, or street centerline, or a permanent structure. All variations from the Agreement drawings and any additional information required by the specifications shall be entered on the electronic-format record drawing set as they occur, in an electronic font of contrasting color, properly identified with cloud and delta markings, and layered as directed by the owner's representative. Request for information and no-cost changes to the plans shall also be incorporated as part of the record drawings. Mere references to RFIs, Bulletins, Change Orders, or Supplemental Drawings without graphically incorporating the changes are not acceptable.

68.6.13.2 A/E's progress payments will be contingent upon the electronic-format record drawings being maintained in a current status, and the owner representative may not approve progress payments unless these electronic-format record drawings are updated regularly. The A/E shall submit to the owner representative together with the application for

payment, a package consisting of a copy of the record drawings in an electronic format updated since the previous pay request.

68.6.13.3 At the conclusion of construction, and as a condition for final A/E payment, the A/E shall complete the incorporation of all remaining changes into the record documents. A/E shall submit to the Project Manager together with the application for final payment, a package consisting of a copy of the record documents in PDF and AutoCAD format, and a reproducible copy of those drawings to show all changes made during construction based upon the contractor's records as provided for in the As-Built drawings and specifications. Each drawing sheet shall be prominently noted Record Drawing. These documents shall become property of the LA-RICS Authority. A spreadsheet similar to the attached example shall be included in the electronic format delivered to the LA-RICS Authority Project Manager. The spreadsheet will contain one line of data for each document submitted in electronic format.

68.6.13.4 The AutoCAD format shall meet the following requirements:

68.6.13.4.1 AutoCAD files shall be stored in the AutoCAD version presently used by LA-RICS Authority. Contact the LA-RICS Authority Project Manager for the latest AutoCAD version.

68.6.13.4.2 All x-ref's, fonts, layering, OLE objects, pen settings, and shape files shall be bound with all paths removed from x-refs and image files, and shall be displayed identically to their hard copy when viewed on screen or viewer without zooming or other adjustments. In no case shall any of the above items require to be manually loaded prior to the full display of the drawings.

68.6.13.4.3 All AutoCAD drawings shall be filed according to the sheet index.

68.6.13.4.4 All AutoCAD drawing files shall be named similar to the index sheet list and should identify the main content of the drawing, e. g., A-3_Floor, A-4_Elev, A-6_Det, etc.

68.6.14 Subject to Article 68.1.7 and upon request of LA-RICS Authority, advise Executive Director of deficiencies in construction of the Project which develop subsequent to acceptance of the Project, but prior to expiration of the warranty period of the Project, and review satisfactory methods for corrections of such deficiencies.

69. Additional Services

A/E agrees to provide additional professional services when directed in writing by LA-RICS Authority, provided that the compensation on the basis therefor has been agreed upon in advance by Executive Director and A/E. Such additional services are defined as, but not limited to:

69.1 Redesign changes: Changes in the approvals given by LA-RICS Authority that repeatedly necessitate substantial revisions in Instruments of Service, except those logically inferable from and consistent with the project objectives and project processes set forth herein, specifically including the Fixed Limit Construction Cost of the Project. No compensation for additional services shall be paid for revisions which may be requested by Executive Director pursuant to Articles 68.1.7 and 72.6.

69.2 Preparing measured drawings of existing structures.

69.3 Additional services necessary to supervise correction of defects in or damage to the Project (excluding corrections of defects or damage related to or arising from the errors or omissions of A/E).

69.4 Additional services caused by the delinquency or insolvency of construction contractor during or after the guarantee period.

69.5 Preparing models and special delineations other than studies made at A/E's option.

69.6 Preparing alternate proposals (except alternates requested by LA-RICS Authority to assure receipt of bids within current estimated construction cost) to be included in the Construction Documents.

69.7 Reserved.

69.8 Reserved.

69.9 Reserved.

69.10 Reserved.

69.11 Making investigations involving detailed appraisals and valuations of existing facilities, and surveys or inventories required in connection with construction performed by LA-RICS Authority.

69.12 Preparing operating and maintenance manuals and training personnel for operation and maintenance.

69.13 Preparing to serve or serving as an expert witness in connection with any public hearing, arbitration proceeding, or legal proceeding.

70. Reimbursable Services

Reimbursable services, when directed in writing by LA-RICS Authority, are defined as, but not limited to:

70.1. The services of LA-RICS Authority-approved special consultants other than those employed or retained by A/E pursuant to Article 68.1.9.

70.2 Reserved.

70.3 Reproduction of Documents

If requested by Executive Director, and except as otherwise provided herein, A/E shall provide copies of the documents which are additional to those required under Basic Services or the Design Manual for review purposes in the number required by Executive Director; the expense of additional reproductions will be borne by LA-RICS Authority. Executive Director reserves the right to select the type of reproduction and the establishment where said reproduction will be done.

70.4 The LA-RICS Authority shall pay A/E for direct cost incurred by A/E with no mark up, for approved reimbursable services, upon satisfactory completion of such services in an amount not to exceed.

71. LA-RICS Authority's Responsibilities

LA-RICS Authority will:

71.1 Reimburse Consultant for plan checking fees or permit fees to obtain permits for the construction of the Project.

71.2 Reserved.

71.3 Provide a program and fixed limit construction cost for the Project, including information as to the space and facility requirements, budget limitations, and scheduling.

71.4 Provide construction inspection as described under all applicable portions of Article 68.6 as the Executive Director may deem advisable.

71.5 Furnish or authorize A/E to furnish soil and foundation data when such data is deemed necessary by Executive Director and A/E, including test logs, soil classifications, soil bearing values, and other data necessary to define subsoil conditions.

71.6 Provide necessary forms of Contracts, bonds, general conditions of the Agreement, and advertisement for bids.

71.7 Notify A/E in writing of LA-RICS Authority administrative procedures required and name LA-RICS Authority representative authorized to act in its behalf. Executive Director shall review documents submitted by A/E and shall promptly render decisions pertaining thereto to avoid unreasonable delay in the progress of the work.

71.8 Notify A/E in writing of apparent deficiencies in materials or workmanship during the contractor's warranty period.

71.9 Nothing in this Agreement nor any act or failure to act on the part of LA-RICS Authority shall be construed as a waiver of a claim by LA-RICS Authority for any defects or deficiencies in the drawings and specifications, or of any A/E services required by this Agreement.

71.10 Furnish and release those Construction Documents required for bidding purposes.

72. <u>A/E's Responsibilities</u>

72.1 Standard of Care: A/E represents, covenants, and agrees that all of the services to be furnished by A/E under or pursuant to this Agreement, from the inception of this Agreement until the Project has been fully completed, shall be of a standard and quality that prevails among architects engaged in architectural practice throughout the United States under the same or similar circumstances involving the design and construction of a project having characteristics that are similar to the Project (including without limitation, public nature, comparable scope, quality, and schedule [Professional Standard]). A/E accepts the special relationship of trust and confidence established between it and LA-RICS Authority by this Agreement. A/E covenants to design the Project and produce the

necessary construction documents, and to further the interests of LA-RICS Authority in accordance with LA-RICS Authority's requirements and procedures, in accordance with the Professional Standard and in compliance with all applicable restrictions, laws, codes, and regulations in effect throughout the period that A/E is performing services under this Agreement.

72.2 Americans with Disabilities Act (ADA): A/E shall exercise skill and care in accordance with the Professional Standard to design the Project to conform to requirements imposed by governmental authorities having jurisdiction over the Project. On January 26, 1991, the Americans with Disabilities Act (ADA) became effective. The ADA is a civil rights law and not a building code. As such, there is no mechanism (such as review by local building officials) whereby A/E and LA-RICS Authority can receive an official determination to confirm that the Project's design complies with the ADA. Title III of the ADA relates to Public Accommodations and Services Operated by Private Entities (the Guidelines), and certain standards affecting the Project's design have been promulgated by the Federal government pursuant to the Guidelines. Compliance with the other titles of the ADA is LA-RICS Authority's sole responsibility. Based on A/E's professional knowledge, judgment, and belief, A/E will design the Project to reflect the requirements of the Guidelines in effect as of the date of the issuance of the building permit, insofar as such requirements relate to the architectural design of the Project. A/E does not warrant that its efforts related to the ADA will assure compliance; however, A/E will perform its services in accordance with the Professional Standard so as to achieve the objectives of the Guidelines.

72.3 The review, checking, plan checking, approval, acceptance of, or payment for any services under this Agreement by LA-RICS Authority, Executive Director, or jurisdictional agencies, shall not relieve A/E of the completeness and coordination of A/E services; nor shall such actions by LA-RICS Authority be construed to operate as a waiver of its rights under this Agreement or of any cause of action arising out of, or in connection with, the performance of A/E's obligations under this Agreement.

72.4 A/E shall, without additional cost or fee to LA-RICS Authority, correct or revise any errors or deficiencies in performance under this Agreement.

72.5 A/E shall design this project so that it can be constructed (under normal LA-RICS Authority competitive bid procedure) within the fixed limit construction cost.

72.6 If the lowest responsive construction bid exceeds the fixed limit construction cost by more than ten percent (10%), A/E shall, as a part of this Agreement, and at no additional cost to LA-RICS Authority, perform such redesign, re-estimating and other services as may, in the opinion of Executive Director,

be required to produce a usable facility within the fixed limit construction cost. A/E shall start such redesign services immediately upon written notification from Executive Director and shall complete the revisions within a reasonable time as determined by Executive Director.

73. Reserved

74. Gratuities

a. Contractor is advised that it is improper for any County or LA-RICS Authority officer, employee, or agent to solicit consideration, in any form, from Contractor with the implication, suggestion, or statement that Contractor's provision of the consideration, or failure to provide consideration, may cause favorable or unfavorable treatment, respectively, for the Contractor relating to the amendment or extension of the Agreement or the making of any determinations with respect to Contractor's performance under this Agreement. A Contractor shall not offer or give, either directly or through an intermediary, such improper consideration, in any form, to a LA-RICS Authority officer, employee, or agent for the purpose of securing favorable treatment as described herein.

b. A Contractor shall immediately report any attempt by a County or LA-RICS Authority officer, employee, or agent to solicit such improper consideration. The report shall be made either to the County or LA-RICS Authority manager charged with the supervision of the employee or to the County Auditor-Controller's Employee Fraud Hotline at (800) 544-6861.

c. Among other items, such improper consideration may take the form of cash; discounts; services; and the provision of travel, entertainment, or tangible gifts.

d. Note that Contractor's failure to adhere to this requirement could subject Paragraph 54, Agreement to Termination for Improper Consideration paragraph in this Agreement.

75. Reserved

76. Default Method of Payment: Direct Deposit or Electronic Funds Transfer

a. The LA-RICS Authority, at its sole discretion, has determined that the most efficient and secure default form of payment for goods and/or services provided under an agreement/ contract with the LA-RICS Authority shall be Electronic Funds Transfer (EFT) or direct deposit, unless an alternative method of payment is deemed appropriate by the Auditor-Controller (A-C).

b. The Contractor shall submit a direct deposit authorization request via the website https://directdeposit.lacounty.gov with banking and vendor information, and any other information that the A-C determines is reasonably necessary to

process the payment and comply with all accounting, record keeping, and tax reporting requirements.

c. Any provision of law, grant, or funding agreement requiring a specific form or method of payment other than EFT or direct deposit shall supersede this requirement with respect to those payments.

d. At any time during the duration of the agreement/contract, a Contractor may submit a written request for an exemption to this requirement. Such request must be based on specific legal, business or operational needs and explain why the payment method designated by the A-C is not feasible and an alternative is necessary. The A-C, in consultation with the contracting department(s), shall decide whether to approve exemption requests.

77. Disallowed Cost

If Proposer's compliance with a County contract has been reviewed by the Department of the Auditor-Controller within the last 10 years, Proposer must not have unresolved questioned costs identified by the Auditor-Controller, in an amount over $100,000.00, that are confirmed to be disallowed costs by the contracting County department, and remain unpaid for six months or more from the date of disallowance, unless such disallowed costs are the subject of current good faith negotiations to resolve the disallowed costs, in the opinion of the County.

78. Reserved

79. Entire Agreement

This Agreement constitutes the entire Agreement between LA-RICS Authority and Consultant and may be modified only by further written Agreement between the parties hereto.

/
/
/
/
/
/
/
/
/
/
/
/
/
/

IN WITNESS WHEREOF, the LA-RICS Authority has, by order of its Board of Directors, caused these presents to be subscribed by the Executive Director, and the Consultant has hereunto subscribed its corporate name and affixed its corporate seal by its duly authorized officers the day, month, and year herein first above written.

LA-RICS Authority

By_____
Executive Director

David Evans and Associates, Inc.

By _____
President

APPROVED AS TO FORM:

MARY C. WICKHAM
County Counsel

By_____
Principal Deputy County Counsel

SCOPE OF SERVICES

LA-RICS AUTHORITY ENGINEERING DESIGN AND RELATED SERVICES

INTRODUCTION TO LA-RICS AUTHORITY

The LA-RICS Authority is a California joint powers authority comprised of member agencies through Los Angeles County, including the County of Los Angeles, and numerous other independent cities and agencies. The LA-RICS Authority's purpose is to bring interoperable public safety communications to the region, and it undertook a Round 1 buildout of 76 public safety grade sites for its Public Safety Broadband Network (PSBN). The LA-RICS Authority is evaluating implementation of a Round 2 build-out of the PSBN by adding up to 26 additional public safety grade telecommunications sites to the PSBN. This solicitation seeks qualified Architectural and Engineering firms for design and support services for the construction of wireless public-safety grade telecommunications sites of various types, including collocation on an existing lattice tower or monopole; raw land new monopole build; and a Rooftop build.

SCOPE OF SERVICES

Consultant's work shall consist of all such services as are customarily rendered when providing architectural/engineering design and related services. Design work will be conducted in three phases for each potential site added to the PSBN, with phases overlapping and running concurrently with other phases for other sites. In the first phase (Phase 1) starting at contract award, the Consultant is required to produce an initial site sketch for up to 40 telecommunication sites accompanied by a construction estimate and propose the best value configuration to the LA-RICS Authority prior to advancing the design to zoning drawing level. In the second design phase (Phase 2), the Consultant will be required to perform all design work for up to 40 telecommunication sites and advance drawings to building permits ready for issuance. Phase 2 for the last telecommunication site for inclusion in the PSBN will be completed by no later than June 2019, unless the LA-RICS Authority approves a subsequent date. The third and final phase (Phase 3) of services is defined by construction support service and shall be completed no later than June 1, 2020.

The work shall include, but not be limited to, the following:

1. General Work and Team Structure

   Architectural/engineering consultant services shall consist of all such services as are customarily rendered when providing professional engineering design services. The work assignments shall range from single tasks to responsibility for all services as described herein for completion of projects. Consultant will produce all engineering drawings, structural calculations, and perform other services necessary for the permitting, building, and modification of sites. The work shall

include, but is not limited to, any of the engineering tasks or combination of tasks enumerated below.

- Alta/Topographic Surveying Services inclusive of plotting easements
- Architectural Programming and Design Services
- BIM/CADD/Drafting Work
- Building and Physical Infrastructure Evaluations
- Conceptual Design
- Constructability Reviews
- Construction Support Services, inclusive of Design change management, Request for Information (RFI) management
- Cost Estimating, various design types for best value
- Design Reviews with project stakeholders
- Electrical/Mechanical Evaluation (Certified)
- Feasibility Studies
- Provide General Engineering Services and stamp for Civil, Structural, Mechanical (HVAC), Electrical, Environmental, and Plumbing Engineering Services, low voltage, fire protection as needed for jurisdictional approvals and acceptance
- Conduct geotechnical investigations and furnish Geotechnical Reports necessary for structural design
- Photographic simulations
- Project Design-Construction Documents
- Specifications Preparation
- Troubleshooting
- Obtain building permits from agencies having jurisdiction
- Value Engineering

To perform the work contemplated in this Section 1, Consultant shall provide a team of individuals led by a licensed Project Architect/Engineer or Project Manager with a minimum of ten (10) years of related work experience performing engineering design work with the most recent five (5) years' experience performing wireless telecommunications facility engineering design work, as listed below. The team shall consist of individuals with the applicable State of California licenses to perform the positions listed below. The LA-RICS Authority shall approve individuals assigned by the consultant to perform work as part of this agreement. Consultant shall warrant that the individuals performing work as part of this agreement are qualified professionals and will be available from any of the disciplines or combinations of disciplines enumerated below:

- Civil Engineering
- Cost Estimating
- Electrical Engineering
- Mechanical Engineering (HVAC and Plumbing)
- Structural Engineering

2. Related Services

   Consultant shall provide additional related services to complete a project. Consultant shall warrant that the individuals performing work as part of this agreement are qualified professionals and will be available from any of the disciplines or combinations of disciplines listed below. These related services include, but are not limited to:

   - Architecture
   - Building Commissioning
   - Disaster Assessment/Inspections/Emergency Evaluation Reporting
   - Feasibility Study
   - Hardware Consultant
   - Landscape Architecture
   - Renewable Energy Analysis
   - Specifications Consultant
   - Supplemental Specialized Technical Consultant
   - Title Reports
   - Tower Mapping

3. Special Assignments

   When requested by the LA-RICS Authority, the Consultant may be required to perform Special Assignments for any of the consultant services contemplated in Section 2 of this Attachment 1 (Scope of Services) to complete critical assignments and projects most efficiently within an expedited schedule. Compensation for these Special Assignments shall be negotiated by the LA-RICS Authority with Consultant.

4. Projects covered by this scope of work may require complete design services, or may only involve the need for certain disciplines.

5. Perform all necessary liaison work with LA-RICS Authority either by telephone, mail, or meeting at the LA-RICS Authority office located in Monterey Park and perform all necessary rechecks to achieve conformance with LA-RICS' Authority requirements.

6. The Consultant will be required to visit project site(s) during the initial drawing phase, review shop drawings, work with other LA-RICS Authority/County employees and consultants, and perform other tasks pertaining to the design process.

7. The Consultant may be required to provide personnel to work at LA-RICS' Authority Monterey Park office on a temporary full-time basis under the direction of LA-RICS Authority staff.

8. The LA-RICS Authority Executive Director or his/her designee shall have final decision authority over the results of the design and/or design review services performed by the Consultant and all work performed by the Consultant shall be to the satisfaction of LA-RICS Authority.

9. The Consultant's work shall comply with the requirements of regulatory agencies and with the Construction Specifications Institute (CSI) as a guide when specifications are provided for LA-RICS Authority projects.

10. The Consultant shall incorporate public safety-grade design features as specified by the LA-RICS Authority. Public safety grade includes enhanced structural integrity of the tower (Rev-G Class III), back-up power through an on-site generator, and/or redundant connectivity (with respect to the redundant connectivity, the Consultant is responsible for drawing in a single point of connection). Examples of site drawings for public safety grades sites for the three (3) types of sites (collocation on an existing lattice tower or monopole; raw land monopole build; and rooftop) are included as Attachment 1.1.

11. The Consultant shall be responsible for inclusion of all applicable construction management requirements (CMRs) that are project design features which are identified by LA-RICS Authority. The CMRs will be implemented by the contractor undertaking construction of the sites, however, to the extent the CMRs have a design impact, Consultant will incorporate and address accordingly. All applicable regulatory requirements shall be included in the design process at the time the requirements become known and/or determined to be applicable. The Consultant shall illustrate and incorporate these features and requirements in design review drawings and construction specifications, as applicable. An example of CMRs are attached as Attachment 1.2.

12. The Consultant shall be responsible and liable for the work performed by assigned staff, and will bear full corporate responsibilities for the contracted work.

13. Design review shall include peer review for technical completeness of design documents. Review comments and, if requested, marked-up documents including drawings and specifications shall be submitted to LA-RICS Authority. Review comments shall be presented in a format approved by LA-RICS Authority.

14. Reports, design review comment documents, and specifications shall be prepared in Microsoft Word format and screened for clarity, grammar, and punctuation prior to submittal.

15. Drawings shall be prepared on AutoCAD Version 9 or newer, or Revit versions presently used by LA-RICS Authority.

16. At the completion of design services, documents including as-built drawings shall be submitted on two sets of CD-ROM/DVD along with original hard copies. All

hardcopies of submissions will be D-sized paper. Three hard copies of all reports, drawings, specifications, and calculations shall be provided as part of each project design phase submittal. All reports, drawings, calculations, and specifications shall be wet stamped by a California licensed Engineer for the scope appropriate to the discipline.

17. At the completion of design review services, an original signed review comment document along with a hard copy and an electronic file shall be provided. Electronic file shall be e-mailed to the LA-RICS Authority assigned Project Manager.

18. All deliverables shall be forwarded to the LA-RICS Authority.

19. The Consultant shall provide training to LA-RICS Authority staff, when this service is requested by the LA-RICS Authority.

20. The Consultant may be required to provide architects/engineers who are registered with the State of California Office of Emergency Services' Safety Assessment Program (SAP) and have a current SAP identification card issued by Cal OES.

21. The Consultant shall comply with AE Design Services Manual.

DELIVERABLES

It is the expectation of the LA-RICS Authority that the following deliverables will be required for each site within the Phased timeframes indicated above:

1. Site Sketch
2. Zone Drawing
3. 50% Construction Drawing
4. 75% Construction Drawing
5. 100% Construction Drawing (inclusive of all responses to jurisdictional review comments such that the Building Permit is ready for issuance)
6. Final as-built drawings

SCHEDULE

The PSBN is funded by federal grants and is set to conclude in 2020. Due to the constricted timeframe, the Consultant shall maintain the staffing and ability throughout the term of the Agreement to prepare a minimum of ten (10) construction drawings concurrently.

After successful negotiations, award of contract, contract execution, and prior to starting any assigned work or project, Consultant will be issued a Notice to Proceed (NTP) outlining the schedule of such work. Failure of Consultant to meet specified schedule goals may result in termination of this contract.

COMPENSATION

The total contract amount is set forth in Attachment 3 (Schedule of Prices) for the entire duration of the contract term, including any options years, if any. Consultant's total fee for each wireless telecommunications facility site design shall be based on a Schedule of Prices negotiated between LA-RICS Authority and the selected Consultant. For negotiation purposes, the Consultant shall provide a detailed lump sum deliverable Schedule of Prices for the drawing packages and hourly rates for additional work with an hourly breakdown of costs.

The Authority requires designs for three (3) different site types for the purposes of scope definition and pricing.

1. Collocation on an existing lattice tower or monopole
2. Raw land monopole build
3. Rooftop

Additional work for each project shall be paid on an hourly basis according to the job title and hourly rate of each employee performing the work as set forth in the Schedule of Prices negotiated between LA-RICS Authority and the selected Consultant.

Compensation for Special Assignments is provided in Section 3 of this Attachment 1 (Scope of Services). LA-RICS Authority preapproval in writing shall be provided for any special costs and reimbursable expenses, such as courier/overnight services, outside copying, etc.

For each project and/or assignment, Consultant shall submit a monthly invoice for review and approval by the LA-RICS Authority. The Consultant shall be compensated monthly for completed deliverables and any additional hourly work performed for additional services of Special Assignments, based on work completed and approved by the LA-RICS Authority. An invoice shall conform to LA-RICS' Authority Invoicing Instructions and shall not be made more than once per month. An invoice shall include a detailed backup for work completed and all authorized reimbursable expenses. **Mileage is not reimbursable.**

ATTACHMENT 1.1 - COLLOCATION EXAMPLE

SITE DATA

SITE INFORMATION

COUNTY: LOS ANGELES
JURISDICTION: [redacted]
OCCUPANCY: U
ZONING: PUBLIC/ INSTITUTIONAL
APN: [redacted]
USE: UNMANNED PUBLIC SAFETY TELECOMMUNICATIONS FACILITY
FLOOD ZONE: X
LAND OWNER: [redacted]

EQUIPMENT MAINTENANCE:
ESTIMATED VISITS TO MAINTAIN EQUIPMENT ONCE SITE IS OPERATIONAL:
ONE TO TWO TIMES PER MONTH (TYPICAL)

BATTERIES:
BATTERIES TO BE INSTALLED WITHIN EQUIPMENT CABINET ARE GEL-FILLED AND DO NOT REQUIRE SPECIAL VENTILATION MEASURES WITHIN THE CABINET. REFERENCE ATTACHED SPECIFICATIONS.

PROJECT TYPE:
PROPOSED LA-RICS PSBN EQUIPMENT SITE WITH:

- PROPOSED 70 FT. MONOPOLE
- PROPOSED EQUIPMENT CABINETS (TOTAL 4)
- PROPOSED ANTENNAS (2) PER SECTOR, (3) SECTORS TOTAL
- PROPOSED MICROWAVE ANTENNAS (3) TOTAL
- 22kW BACK UP GENERATOR

LA-RICS
Los Angeles Regional Interoperable Communications System

[redacted]

PROJECT TEAM

SR.PROJECT MANAGER:
LA-RICS PROJECT TEAM
2525 CORPORATE PLACE, SUITE 200
MONTEREY PARK, CA 91754
CONTACT: [redacted]
CELL: [redacted]
EMAIL: [redacted]

PROJECT MANAGER:
[redacted]
CONTACT: [redacted]
CELL: [redacted]
EMAIL: [redacted]

PROJECT MANAGER:
[redacted]
CONTACT: [redacted]
CELL: [redacted]

ENGINEER/ARCHITECT:
[redacted]
TEL: [redacted]
CONTACT: [redacted]

SURVEYOR:
[redacted]
TEL: [redacted]
EMAIL: [redacted]

SHEET INDEX

SHEET NO.	DESCRIPTION	REV. NO.
T1	TITLE SHEET	0
GN1	GENERAL NOTES	0
GN2	GENERAL NOTES	0
GN3	GENERAL NOTES	0
GN4	GENERAL NOTES	0
GN5	GENERAL NOTES	0
GN6	GENERAL NOTES	0
GN7	GENERAL NOTES & LEGEND	0
LS1	TOPOGRAPHIC SURVEY	0
LS2	TOPOGRAPHIC SURVEY	0
A1	SITE PLAN	0
A2	ENLARGED SITE PLAN	0
A3	TOWER ELEVATION	0
A4	EQUIPMENT DETAILS	0
A4.1	EQUIPMENT DETAILS	0
A5	PORT ASSIGNMENTS	0
A6	UTILITY DETAILS	0
A7	FOUNDATION DETAILS	0
A8	SITE SIGNAGE DETAILS	0
S1	STRUCTURAL NOTES	0
S1.1	STRUCTURAL NOTES	0
S2	CMU WALL DETAIL	0
E1	ELECTRICAL GENERAL NOTES	0
E2	UTILITY ROUTING PLAN	0
E3	ENLARGED UTILITY ROUTING PLAN	0
E4	SINGLE LINE DIAGRAM & DETAILS	0
G1	GROUNDING GENERAL NOTES	0
G2	EXTERIOR GROUNDING PLAN	0
G3	GROUNDING DETAILS	0
G4	EQUIPMENT GROUNDING SYSTEM	0

LA-RICS
Los Angeles Regional Interoperable Communications System

[redacted]

UTILITIES

SCE CUSTOMER SERVICE
1-800-655-4555
SCE CONTACT: JULIO FELIX
TEL: 951-760-6611
ALL IMS INSPECTION REQUEST
EMAIL: IMS@sce.com

Underground Service Alert
Call: TOLL FREE
1-800
422-4133
TWO WORKING DAYS BEFORE YOU DIG
NOTIFY DIG-ALERT OR PRIVATE LOCATING COMPANY PRIOR TO ANY EXCAVATING OR TRENCHING

CENTER OF TOWER

LATITUDE:
LONGITUDE:
ELEVATION:
[redacted]

APPLICANT

[redacted]

ATTACHMENTS

[redacted]

APPROVALS

[redacted]

REGIONAL MAP

[redacted]

VICINITY MAP

[redacted]

DRIVING DIRECTIONS

FROM THE LA-RICS OFFICE (2525 CORPORATE PLACE, SUITE 200 MONTEREY PARK, CA 91754)

[redacted]

TITLE SHEET
T1

CLOSURE

LA-RICS
Los Angeles Regional Interoperable Communications System

[redacted]

GENERAL NOTES:

1. THE CONTRACTOR WILL VERIFY AND ESTABLISH FIRST ORDER SURVEY POINTS FOR ALL SITES, NEW OR EXISTING, AND WILL ESTABLISH LINES, LEVELS, GRADES, BENCHMARKS, SURVEY REFERENCE POINTS, AND MEASUREMENTS NECESSARY FOR THE ACCURATE LAYOUT OF THE WORK.

2. CONTRACTOR WILL PROVIDE ALL LABOR, MATERIALS, TOOLS, EQUIPMENT, SAFETY EQUIPMENT, TRANSPORTATION, AND SERVICES NECESSARY TO COMPLETE ALL THE WORK OUTLINED IN ALL THE DRAWINGS, SPECIFICATIONS, SCOPE OF WORK, BILL OF MATERIALS, AND ANY OTHER DOCUMENT ISSUED BY [redacted]

3. THE CONTRACTOR SHALL COMPLY WITH ALL LOCAL AND NATIONAL CODES, LAWS, ORDINANCES, REGULATIONS, SAFETY REGULATIONS. ALL OSHA REGULATIONS, ALL PUBLIC AND MUNICIPAL AUTHORITIES, AND ANY UTILITY COMPANY REGULATIONS AND DIRECTIVES. MOST STRINGENT REQUIREMENT GOVERNS.

4. EXTREMELY SENSITIVE LANDLORD AND WORKING AREA. TEAM MUST REFRAIN FROM EXCESS NOISE. TEAM PROFESSIONALISM IS REQUIRED AT ALL TIMES. NO SMOKING ALLOWED ON COUNTY OR CITY PROPERTY.

5. ALL MATERIALS SUPPLIED BY THE GENERAL DYNAMICS REPRESENTATIVE, AND MOTOROLA, SHALL BE INSTALLED IN ACCORDANCE WITH ALL LOCAL AND NATIONAL CODES, LAWS, ORDINANCES, REGULATIONS AND PER MANUFACTURER'S RECOMMENDATIONS. MOST STRINGENT REQUIREMENT GOVERNS.

6. ANY CONTRACTOR SUBMITTING BIDS ON ANY OF THE WORK IS REQUIRED TO VISIT EACH SITE PRIOR TO THE BID SUBMITTAL AND FAMILIARIZE THEMSELVES WITH EXISTING CONDITIONS & UNDERSTAND THE SCOPE OF WORK INTENDED FOR THE PROJECT. SITE VISITS MUST BE PRE-ARRANGED WITH MOTOROLA & LARICS THIS WILL BE PERFORMED AT THE CONTRACTOR'S EXPENSE.

7. THE DRAWINGS AND SPECIFICATIONS ARE A GENERAL DIRECTIVE FOR THE SCOPE OF WORK. EXACT DIMENSIONS AND LOCATIONS MAY CHANGE IN THE FIELD. THE CONTRACTOR IS TO VERIFY THE DIMENSIONS AND LOCATIONS AND REPORT ANY AND ALL DISCREPANCIES TO [redacted] PRIOR TO COMMENCING THE RELATED WORK. ANY MINOR ERRORS OR OMISSIONS IN THE DRAWINGS AND SPECIFICATIONS, DOES NOT EXCUSE THE CONTRACTOR FROM COMPLETING THE PROJECT AND IMPROVEMENTS IN ACCORDANCE WITH THE INTENT OF THESE DOCUMENTS.

8. ALL SITES SHALL BE KEPT CLEAN AND FREE OF DEBRIS ON A DAILY BASIS. ALL TRASH AND MATERIALS NO LONGER BEING USED AT THE SITE MUST BE REMOVED AND PROPERLY DISPOSED OF ON A DAILY BASIS. ANY EXCESS MATERIAL WILL BE RETURNED TO [redacted] AND DELIVERED TO THE WAREHOUSING FACILITY PER THE DIRECTION OF [redacted] ONSITE FACILITY DUMPSTERS ARE NOT TO BE USED FOR THE DISPOSAL OF CONSTRUCTION DEBRIS.

8A. CONTRACTOR TO PROVIDE PORTABLE RESTROOMS.

9. THE CONTRACTOR SHALL NOT PROCEED WITH ANY WORK AT THE SITE PRIOR TO A NOTICE TO PROCEED (NTP) BEING ISSUED AND A PRE-CONSTRUCTION MEETING AT THE SITE HAS TAKEN PLACE. PRE-CONSTRUCTION MEETING WILL BE COORDINATED AND HELD A MIN. OF 7 DAYS PRIOR TO START AND NO EARLIER THEN 21 DAYS.

10. SITE CONSTRUCTION TO BE CONDUCTED UNDER NORMAL BUSINESS HOURS FROM 8AM TO 5PM.

11. THE CONTRACTOR SHALL HAVE A DESIGNATED MANAGER ON SITE AT ALL TIMES THAT ANY WORK IS BEING PERFORMED. A CONTRACTOR IS NOT DEFINED AS A DESIGNATED MANAGER.

12. THE CONTRACTOR SHALL PROVIDE A SCHEDULED LIST OF ALL CONTRACTORS, WHICH SHALL INCLUDE ADDRESSES, CELL PHONE NUMBERS, HOME PHONE NUMBERS, VERIFICATION OF INSURANCE, ANY AND ALL PERTINENT LICENSES, AND AN ACCURATE SCHEDULE FOR THE PROJECT PRIOR TO THE ISSUANCE OF A NOTICE TO PROCEED NTP. BADGES ARE REQUIRED.

13. CONTRACTOR WILL KEEP COMPLETE UP-TO-DATE SET OF THE DRAWINGS, SPECIFICATIONS, SCOPE OF WORK, AND BILL OF MATERIALS ON SITE AT ALL TIMES. THIS WILL BE REFERENCED AS THE AS-BUILT DRAWINGS AND MUST BE KEPT CURRENT ON A DAILY BASIS. THIS IS IN ADDITION TO THE PERMIT SET.

14. NEW AND CLEAN SETS OF CONTRACT DOCUMENTS WILL BE ISSUED TO THE CONTRACTOR NEAR THE COMPLETION OF THE PROJECT TO BE USED TO TRANSFER THE INFORMATION FROM THE FIELD COPY OF AS-BUILT DRAWINGS TO THE NEW COPY. THIS NEEDS TO BE SUBMITTED TO [redacted] TH THE CLOSE-OUT DOCUMENTS, 6 VERIFIED COPIES TOTAL. AS-BUILDS TO BE SUBMITTED IN ELECTRONIC (PDF & AUTOCAD) FORMAT AND REPRODUCIBLE FORMATS.

15. ON ANY COLLOCATION SITE, THE CONTRACTOR AND ALL SUB'S ASSIGNED ARE NOT TO USE EXISTING POWER OR TAMPER WITH ANY EQUIPMENT BELONGING TO ANY OTHER CARRIER. FAILURE TO ADHERE TO THIS WILL CAUSE IMMEDIATE DISMISSAL OF THE CONTRACTOR FROM THE PROJECT.

16. THE CONTRACTOR IS RESPONSIBLE FOR SCHEDULING ALL INSPECTIONS AND TESTING REQUIRED FOR EACH PROJECT. A 24-HOUR NOTIFICATION TO [redacted] S REQUIRED FOR ALL INSPECTIONS AND TESTING. A FIELD COPY OF ALL INSPECTION AND TESTING REPORTS AS WELL AS TRUCK TICKETS MUST BE SUBMITTED TO [redacted] WITHIN THE CLOSEOUT PACKAGE.

17. THE CONTRACTOR IS RESPONSIBLE TO VERIFY ALL MATERIAL ISSUED TO HIM/ HER, AND TO REPORT ANY SHORTAGES AND DISCREPANCIES TO [redacted] AT THE TIME OF ISSUANCE. THE CONTRACTOR SHALL STORE THESE MATERIALS PROPERLY, ACCORDING TO THE MANUFACTURER'S RECOMMENDATIONS AND IN A MANNER THAT WILL NOT VOID THE WARRANTY OF ANY ITEM. IF ANY ITEM IS DAMAGED OR UNUSABLE DUE TO IMPROPER HANDLING AND STORAGE, THE CONTRACTOR WILL REPLACE IT AT HIS/ HER EXPENSE.

18. THE CONTRACTOR IS RESPONSIBLE TO FURNISH PROPER FACILITIES FOR THE WORKERS ON EACH PROJECT FOR THE DURATION OF THAT PROJECT. WORKERS ARE NOT ALLOWED TO USE FACILITY REST ROOMS AT ANYTIME.

GENERAL NOTES (CONTINUED):

19. THE CONTRACTOR IS RESPONSIBLE TO MAINTAIN THE PRESENT CONDITION OF ANY EXISTING BUILDINGS, LANDSCAPING, FENCING, EQUIPMENT, WALKS, DRIVES, AND ATTACHMENTS. IF ANY DAMAGE SHOULD OCCUR, THE CONTRACTOR IS RESPONSIBLE TO RESTORE THE DAMAGE TO A BETTER OR NEW CONDITION. CONTRACTOR SHALL COMPLY WITH SITE CLEANLINESS REQUIREMENTS.

20. NO SMOKING ON LOS ANGELES COUNTY OR CITY PROPERTY AT ANYTIME.

21. TOWER CLIMBERS PROFESSIONALS TO PRESENT CLIMBING CERTIFICATION WITHIN TWO YEARS FROM EXPIRATION DATES.

22. THE CONTRACTOR WILL REMOVE FROM THE PROJECT SITE, TRANSPORT AND DISPOSE AT AUTHORIZED DUMP SITES AT ITS COST, ANY EXISTING STRUCTURE TO BE REPLACED UNLESS DIRECTED OTHERWISE BY THE AUTHORITY. THIS INCLUDES ANY EXISTING FLAG POLE, OR ANTENNA SUPPORT STRUCTURE THAT WILL BE REPLACED. EXCEPT FOR A MONOPOLE, HOSE RACK, GUYED TOWER, OR SELF-SUPPORTING COMMUNICATION TOWER. THE AUTHORITY SHALL RECOVER ANY SALVAGE VALUE FROM THE DISPOSAL OF THESE STRUCTURES.

23. CONTRACTOR TO COORDINATE WITH AUTHORITY TO RELOCATE ANY EXISTING EQUIPMENT, WHERE APPLICABLE.

24. NAMEPLATES WILL BE PLASTIC LAMINATED, WHITE FACE WITH BLACK ENGRAVED CHARACTERS AND WILL COMPLY WITH BTOP LABELING REQUIREMENTS.

PART 1 – PROJECT GENERAL NOTES:

1.1 SCOPE OF WORK

A. PROVIDE ALL LABOR, MATERIAL, TOOLS, EQUIPMENT, TRANSPORTATION AND SERVICES NECESSARY FOR AND INCIDENTAL TO COMPLETION OF ALL WORK AS INDICATED ON THE DRAWINGS AND /OR AS SPECIFIED HEREIN.

1.2 DRAWING USE AND INTERPRETATION

A. THE DRAWINGS ARE DIAGRAMMATIC AND INDICATE THE GENERAL ARRANGEMENT OF SYSTEMS AND EQUIPMENT UNLESS INDICATED OTHERWISE BY DIMENSIONS OR DETAILS. EXACT EQUIPMENT LOCATIONS AND ROUTINGS, ETC. SHALL BE GOVERNED BY ACTUAL FIELD CONDITIONS AND/ OR INSTRUCTIONS OF [redacted]

B. ANY CHANGE MUST BE APPROVED IN WRITING BY GENERAL DYNAMICS PRIOR TO WORK BEING DONE. AS-BUILD REDLINE CHANGES MUST BE MAINTAINED ONSITE DURING CONSTRUCTION ACTIVITIES.

1.3 COMPLETE SYSTEMS

A. GENERAL: FURNISH AND INSTALL ALL MATERIALS AS REQUIRED FOR COMPLETE SYSTEMS, WHETHER SPECIFICALLY INDICATED OR NOT. ALL SYSTEMS SHALL BE COMPLETELY ASSEMBLED, TESTED, ADJUSTED, DEMONSTRATED TO BE READY FOR OPERATION PRIOR TO OPERATORS ACCEPTANCE.

1.4 CODES AND REGULATIONS

A. GENERAL: COMPLY WITH ALL GOVERNING FEDERAL, STATE AND LOCAL LAWS, ORDINANCES, CODES, RULES AND REGULATIONS. WHERE THE CONTRACT DOCUMENTS EXCEED THESE REQUIREMENTS, THE CONTRACT DOCUMENTS SHALL GOVERN. IN NO CASE SHALL WORK BE INSTALLED CONTRARY TO OR BELOW MINIMUM LEGAL STANDARDS.

B. UTILITIES: COMPLY WITH ALL APPLICABLE RULES, RESTRICTIONS, AND REQUIREMENTS OF THE UTILITY COMPANIES SERVING THE PROJECT SITE/ FACILITIES.

C. NONCOMPLIANCE: SHOULD ANY WORK BE PERFORMED WHICH IS FOUND NOT TO COMPLY WITH ANY OF THE ABOVE, CONTRACTOR SHALL PROVIDE ALL WORK AND PAY ALL COSTS NECESSARY TO CORRECT THE DEFICIENCIES.

D. CONSTRUCTION MANAGEMENT REQUIREMENT: REFER TO THE CMR SITE FOR SITE SPECIFIC CONSTRUCTION REQUIREMENTS.

1.5 REFERENCE STANDARDS

A. ALL LATEST PUBLISHED STANDARDS OF THE FOLLOWING ASSOCIATIONS/ ORGANIZATIONS SHALL BE FOLLOWED AND APPLIED WHERE APPLICABLE, AS MINIMUM REQUIREMENTS.

1. 2013 CALIFORNIA BUILDING CODE (CBC)

2. AMERICAN NATIONAL STANDARDS INSTITUTE (ANSI)

3. AMERICAN SOCIETY FOR TESTING AND MATERIALS (ASTM)

4. ELECTRICAL TESTING LABORATORY (ETL)

5. INSULATED CABLE ENGINEERS ASSOCIATION (ICEA)

6. INSTITUTE OF ELECTRICAL AND ELECTRICAL ENGINEERS (IEEE)

7. NATIONAL BOARD OF FIRE UNDERWRITERS (NBFU)

8. NATIONAL ELECTRICAL MANUFACTURER'S ASSOCIATION (NEMA)

[redacted]

1.5 REFERENCE STANDARDS (CONTINUED):

9. NATIONAL ELECTRIC SAFETY CODE (NESC)

10. NATIONAL FIRE PROTECTION ASSOCIATION (NFPA)

11. UNDERWRITER'S LABORATORIES (UL)

12. BUILDING OFFICIALS & CODE ADMINISTRATORS (BOCA)

13. NATIONAL ELECTRICAL CODE (NEC)

14. INTERNATIONAL BUILDING CODE (IBC)

15. UNDERWRITERS LABORATORIES (UL)

16. MIL-STD-810 (LATEST REVISION)

17. TELECOMMUNICATIONS INDUSTRY ASSOCIATION (TIA)

18. ELECTRONIC INDUSTRY ALLIANCE (EIA)

19. NATIONAL INSTITUTE OF STANDARDS AND TECHNOLOGY (NIST)

20. AMERICAN CONCRETE INSTITUTE (ACI)

21. LAND USE PLAN ADOPTED BY THE AIRPORT LAND USE COMMISSION (ALUC).

22. FEDERAL AVIATION ADMINISTRATION (FAA) RULES & REGULATIONS

23. NATIONAL ENVIRONMENTAL POLICY ACT (NEPA)

24. THE CALIFORNIA ENVIRONMENTAL QUALITY ACT (CEQA)

25. AMERICAN SOCIETY OF TESTING MATERIALS, ASTM (APPLICABLE SECTIONS AS LISTED IN THIS SPECIFICATION).

26. INTERNET ENGINEERING TASK FORCE (IETF) STANDARDS AND BEST PRACTICES FOR INTERNET PROTOCOL (IP) NETWORKS

27. AMERICAN INSTITUTE OF STEEL CONSTRUCTION LOAD RESISTANCE FACTOR DESIGN MANUAL 2013 AISC 14TH EDITION

28. PART 15, 80, 90, AND 101 OF THE FEDERAL COMMUNICATIONS COMMISSION (FCC) RULES AND REGULATIONS

29. CALIFORNIA'S ROHS (RESTRICTION OR USE OF CERTAIN HAZARDOUS SUBSTANCES), SECTION 25214.10 OF THE CALIFORNIA HEALTH AND SAFETY CODE

30. FCC AND OSHA SPECIFICATIONS RELATED TO MAXIMUM PERMISSIBLE EXPOSURE (MPE) LIMITS FOR THE POWER DENSITY AN MAGNETIC AND ELECTRIC FIELD STRENGTH FROM RF TRANSMITTERS, INCLUDING BUT NOT LIMITED TO MPE STANDARDS SET FORTH IN SECTIONS 1.307 AND 1.1310 OF TITLE 47 OF THE CODE OF FEDERAL REGULATIONS.

31. LOS ANGELES COUNTY, AND OTHER JURISDICTIONAL AGENCIES, CODES AND ORDINANCES IEEE, TIA AND TELCORDIA STANDARDS ON GROUNDING, BONDING AND LIGHTENING PROTECTION FOR SENSITIVE ELECTRONIC AND TELECOMMUNICATIONS EQUIPMENT TELECOMMUNICATION INDUSTRY ASSOCIATION, ANSI/TIA 222 G, STRUCTURE STANDARDS FOR ANTENNA SUPPORTING STRUCTURES AND ANTENNAS

32. 2014 COUNTY OF LOS ANGELES BUILDING CODE (TITLE 26), AND OTHER JURISDICTIONAL AGENCIES, BASED ON THE 2013 CALIFORNIA BUILDING CODE AND THE 2012 INTERNATIONAL BUILDING CODE

33. AMERICAN WELDING SOCIETY (AWS) STRUCTURAL WELDING CODE D1.1 – LATEST REVISION FEDERAL AVIATION ADMINISTRATION, FAA ADVISORY CIRCULAR AC 70/7476, OBSTRUCTION MARKING AND LIGHTING, AND ALL ADVISORY CIRCULAR REFERENCED THEREIN INCLUDING SPECIFICATIONS FOR OBSTRUCTION LIGHTING EQUIPMENT (AC 150/5345-43F), INCLUDING ALL CHANGES

34. FEDERAL COMMUNICATIONS COMMISSION, FCC RULES AND REGULATIONS, PART 17, SUBPART C. SPECIFICATIONS FOR OBSTRUCTION MARKING AND LIGHTING OF ANTENNA STRUCTURES, SECTIONS 17.21 THROUGH 17.58, AND FCC FORM 715, OBSTRUCTION MARKING AND LIGHTING SPECIFICATIONS FOR ANTENNA STRUCTURES.

35. ALL LOCAL BUILDING CODES, RULINGS, ZONING, AND PLANNING ORDINANCES.

36. [redacted]

1.6 PERMITS

1. ALL PERMITS REQUIRED BY ALL APPLICABLE AGENCIES, WILL BE OBTAINED BY THE CONTRACTOR.

GENERAL NOTES
GN1

[redacted]

NOTE: ALL INFORMATION IS SUBJECT TO FIELD VERIFICATION. ALL INFORMATION IS CONFIDENTIAL AND NOT FOR PUBLIC DISTRIBUTION WITHOUT EXPRESS CONSENT OF THE LOS ANGELES REGIONAL INTEROPERABLE COMMUNICATIONS SYSTEMS AUTHORITY.

1.7 SUBMITTALS

A. REQUIRED SUBMITTALS INCLUDE: LIST OF CONTRACTORS; PRODUCT DATA; SHOP DRAWINGS; AND VARIOUS ADMINISTRATIVE SUBMITTALS.

B. RECORD DOCUMENTS: INDICATED ACTUAL INSTALLED LOCATIONS FOR ALL EQUIPMENT AND DEVICES ROUTING OR MAJOR INTERIOR RACEWAYS. LOCATIONS OF ALL CONCEALED AND UNDERGROUND EQUIPMENT AND RACEWAYS AND ALL APPROVED MODIFICATIONS TO THE CONTRACT DOCUMENTS, AND DEVIATIONS NECESSITATED BY FIELD CONDITIONS AND CHANGE ORDERS.

C. SAFETY MEETING(S) MINUTES.

D. NUMBER OF COPIES OF ALL SUBMITTALS: TWO

1.8 QUALITY ASSURANCES

A. MANUFACTURERS QUALIFICATIONS: NOT LESS THAN THREE YEARS EXPERIENCE IN THE ACTUAL PRODUCTION OF THE SPECIFIED PRODUCTS.

B. INSTALLERS QUALIFICATIONS: FIRM WITH NOT LESS THAN FIVE YEARS EXPERIENCE IN THE INSTALLATION OF ELECTRICAL SYSTEMS AND EQUIPMENT SIMILAR IN SCOPE AND COMPLEXITY TO THOSE REQUIRED FOR THIS PROJECT, AND HAVING SUCCESSFULLY COMPLETED AT LEAST TEN COMPARABLE SCALE PROJECTS.

C. INCIDENTAL WORK: PAINTING, PATCHING WELDING, CARPENTRY, MECHANICAL WORK AND THE LIKE REQUIRED FOR WORK SHALL BE PERFORMED BY CRAFTSMAN SKILLED IN THE APPROPRIATE TRADE.

D. THE CONTRACTOR IS TO REVIEW AND UNDERSTAND THE SITE INSPECTION CHECKLIST FOR THE SITE PHOTO, QA AND CLOSEOUT.

E. CONTRACTOR IS RESPONSIBLE FOR COMPLETING THE CERTIFICATION OF HAZARD ASSESSMENT ON A DAILY BASIS. IN ADDITION TO THE SITE HAZARDS, THE FORM NEEDS TO INCLUDE INFORMATION ON THE NEAREST HOSPITALS, FIRE DEPARTMENT AND POLICE DEPARTMENT AND SITE ADDRESS OR LAT/LONG.

F. THE CONTRACTOR SHALL HAVE AT LEAST TWO PERSONS ON SITE AT ALL TIMES WITH VALID CERTIFICATIONS IN THE FIRST AID AND CPR.

1.9 INSPECTIONS

A. GENERAL: DURING AND UPON COMPLETION OF THE WORK, ARRANGE AND PAY ALL ASSOCIATED COSTS FOR INSPECTION OF ALL ELECTRICAL WORK INSTALLED UNDER THIS CONTRACT, IN ACCORDANCE WITH THE CONDITIONS OF THE CONTRACT.

B. INSPECTIONS REQUIRED: AS PER THE LAWS AND REGULATIONS OF THE LOCAL AND/ OR STATE AGENCIES HAVING JURISDICTION AT THE PROJECT SITE. SEE AUTHORITY FOR ADDITIONAL INFORMATION FOR INSPECTION AND NOTIFICATION PROCESSES.

C. INSPECTION AGENCY: APPROVED BY THE LOCAL AND/ OR STATE AGENCIES HAVING JURISDICTION AT THE PROJECT SITE.

D. CERTIFICATES: SUBMIT ALL REQUIRED INSPECTION CERTIFICATES.

E. STATEMENT OF SPECIAL INSPECTIONS: WHERE SPECIAL INSPECTION OR TESTING IS REQUIRED BY SECTION 1705, THE REGISTER DESIGN PROFESSIONAL IN RESPONSIBLE CHARGE SHALL PREPARE A STATEMENT OF SPECIAL INSPECTIONS IN ACCORDANCE WITH SECTION 1704.2.3 OF THE 2013 CBC

F. CONTRACTOR TO PROVIDE ALL REQUIRED THIRD PARTY SPECIAL INSPECTOR OR DEPUTY INSPECTOR TO ENSURE THEY INCLUDE INSPECTIONS AND TESTS REQUIRE BY SECTION 1705 (CBC 2013), BUT NOT LIMITED TO:

- –FOUNDATIONS
- –CONDUITS
- –ELECTRICAL
- –TOWER SOILS
- –TOWER FOUNDATION REBAR
- –TRENCHING AND BACK FILL
- –COMPACTION TEXT (6" PLACED LAYERS TO BE COMPACTED AT LEAST 95%)
- –TOWER ASSEMBLY
- –STEEL PLATFORM ASSEMBLY
- –FINAL SITE INSPECTION

INCLUDES ALL TRAVEL, PER DIEM AND EXPENSES IN THE PROVIDED COST.

G. ADDITIONAL INSPECTIONS THAT REQUIRE NOTIFICATION TO AUTHORITY
– TESTING EXISTING GENERATOR USING APPROX SIZED LOAD BANK, WITNESSED BY AUTHORITY.

1.10 DELIVERY STORAGE AND HANDLING

A. PACKING AND SHIPPING: DELIVER PRODUCTS IN ORIGINAL UNOPENED PACKAGING, PROPERLY IDENTIFIED WITH MANUFACTURER'S IDENTIFICATION, AND COMPLIANCE LABELS.

B. STORAGE AND PROTECTION: COMPLY WITH ALL MANUFACTURER'S WRITTEN RECOMMENDATIONS. STORE ALL PRODUCTS IN A MANNER WHICH SHALL PROTECT THEM FROM DAMAGE, WEATHER, AND ENTRY OF DEBRIS.

C. DAMAGED PRODUCTS: DO NOT INSTALL DAMAGED PRODUCTS. ARRANGE FOR PROMPT REPLACEMENT.

D. CONTRACTOR RESPONSIBLE FOR MATERIALS UPON RECEIPT.

E. CONTRACTOR SHALL COORDINATE MATERIAL STAGING AND SITE STORAGE WITH EACH SITE COMPETENT PARTY.

1.11 LANDSCAPING

A. THE CONTRACTOR SHALL GRUB THE SITE AREA AND ANY ACCESS ROAD, CLEARING AND REMOVING A MINIMUM OF 6" TO ACHIEVE A STABLE SUB–BASE TO ACCEPT FILL OR OTHER MATERIAL SPECIFIED FOR THE SITE AND NOT REUSED IN ANY PART OF THIS PROJECT.

B. IT IS THE CONTRACTOR'S SOLE RESPONSIBILITY TO CALL THE LOCAL LOCATING AUTHORITIES (OR PRIVATE LOCATING SERVICES AND OTHER STEPS AS REQUIRED TO VERIFY THE LOCATION OF ANY UNDERGROUND UTILITIES OR LINES THAT EXIST WITHIN THE ENTIRE PROJECT AREA. THE CONTRACTOR SHALL PLACE THESE ITEMS ON THE AS–BUILT DRAWINGS.

C. IF NEW LANDSCAPING IS REQUIRED REFER TO LANDSCAPE SHEETS ATTACHED FOR DETAILS. CONTRACTOR TO PROVIDE NURSERY BILL OF LADING.

D. ALL ROADWORK AND MATERIALS SHALL CONFORM TO ALL STATE AND LOCAL CODES IN ACCORDANCE WITH THE DEPARTMENT OF HIGHWAY AND PUBLIC TRANSPORTATION STANDARD SPECIFICATIONS.

E. THE ACCESS ROAD, IF REQUIRED, WILL BE CONSTRUCTED FIRST BEFORE ANY OTHER WORK ON THE SITE IS PERMITTED. BRING THE ROAD TO SUB–BASE COURSE TO ALLOW CONSTRUCTION TRAFFIC TO USE THE ROAD FOR THE PROJECT, AND COMPLETE THE ROAD AFTER THE CONSTRUCTION OF THE SITE IS SUBSTANTIALLY COMPLETE.

F. THE CONTRACTOR WILL PROVIDE FINISHED GRADING THAT WILL BE PERFORMED AFTER THE WORK IN THE AREA IS COMPLETE AND JUST PRIOR TO PLACING GRAVEL SURFACING. FILL, IF NECESSARY, WILL BE BROUGHT TO FINISHED GRADES INDICATED AND WILL BE GRADED TO DRAIN WATER AWAY FROM STRUCTURES. A MINIMUM SLOPE OF 2% WILL BE PROVIDED FOR POSITIVE DRAINAGE AWAY FROM PROPOSED STRUCTURES. GRADING WILL PROVIDE AN EVEN, SMOOTH SURFACE FREE FROM CELLULOSE MATERIALS, LARGE ROCKS, AND OTHER DELETERIOUS MATERIALS.

G. ALL ACCESS ROAD AND SITE AREAS WILL HAVE AN UNDERLAY OF AMOCO PROPEX, OR EQUAL.

H. A SOIL STERILIZER SHALL BE APPLIED TO ALL GRAVEL SURFACES, AND BE AN EPA REGISTERED LIQUID COMPOSITION AND OF PRE–EMERGENCE DESIGN. THE PRODUCT LABEL AND INFORMATION WILL BE GIVEN TO [redacted]

I. GRAVEL FILL SHALL BE WELL–GRADED, HARD, DURABLE, NATURAL SAND AND GRAVEL, FREE FROM ICE AND SNOW, ROOTS SOD RUBBISH, AND OTHER DELETERIOUS OR ORGANIC MATTER. MATERIAL SHALL CONFORM TO THE FOLLOWING GRADATION REQUIREMENTS:

SIEVE NUMBER	% PASSING BY WEIGHT
4"	100
1/2"	50–85
#4	40–75
#10	30–60
#40	10–30
#100	5–20
#200	0–8

J. ALL FILL DIRT SHALL BE CLEAN AND NATURAL, FREE FROM ANY DELETERIOUS MATERIALS, ROOTS, ICE, SNOW, SOD, AND RUBBISH. A COPY OF ALL DELIVERY TICKETS WILL BE SUBMITTED TO GENERAL DYNAMIC WITHIN 24 HOURS FROM THE DELIVERY.

K. TRENCHES SHALL HAVE A CLEAN COMPATIBLE FILL PLACED IN MAXIMUM LIFTS OF 6", AND MECHANICALLY COMPACTED TO A DENSITY OF 95% (REFER TO SOILS REPORT FOR SITE SPECIFIC REQUIREMENTS BY ENGINEER). METALLIC WARNING TAPE (RED W/ FOIL BACKING) SHALL BE PLACED AT 12" BELOW FINISHED GRADE ALONG THE ENTIRE TRENCH. ANY DEVIATION FROM SOILS REPORT SHALL BE APPROVED BY SOIL ENGINEER AND AUTHORITY.

L. ALL COMPACTING OF SITE AREAS SHALL BE ACCOMPLISHED BY MECHANICAL MEANS. LARGER AREAS SHALL BE COMPACTED BY POWER–DRIVEN HAND HELD TAMPER. ALL COMPACTED AREAS SHALL BE COMPACTED WITHIN 95% (REFER TO SOILS REPORT FOR SITE SPECIFIC REQUIREMENTS BY ENGINEER) AND TESTED BY AN INDEPENDENT LABORATORY AND ACCOMPANIED BY GEOTECHNICAL REPORT. IT WILL BE THE RESPONSIBILITY OF THE CONTRACTOR TO SCHEDULE TESTING. ANY SCHEDULING FOR A PROCTOR WILL BE THE CONTRACTORS RESPONSIBILITY, AND MUST BE DONE IN A TIMELY FASHION TO ASSURE THE PROJECT WILL NOT BE DELAYED. ANY DEVIATION FROM SOILS REPORT SHALL BE APPROVED BY SOIL ENGINEER AND AUTHORITY.

M. ANY FILL OR STONE WILL BE PLACED IN MAXIMUM 6" LIFTS PRIOR TO COMPACTING.

N. FINISHED GRADE, INCLUDING TOP SURFACE COURSE, SHALL EXTEND A MINIMUM 12" BEYOND THE SITE FENCE AND SHALL COVER THE AREA AS INDICATED USING CRUSHED STONE #3.

O. USE RIP RAP IN AREAS WITH SLOPE GREATER THEN 2:1, IN THE ENTIRE DITCH FOR 6 FEET IN ALL DIRECTIONS AT CULVERT OPENINGS. SUBJECT TO APPROVAL BY STRUCTURAL AND SOIL ENGINEER.

P. SEED FERTILIZER AND STRAW COVER SHALL BE APPLIED TO ALL OTHER DISTURBED AREAS, DITCHES, DRAINAGE, AND SWALES NOT OTHERWISE RIPRAPPED. SEED AND FERTILIZER SHALL BE APPLIED TO SURFACE CONDITIONS THAT WILL ENCOURAGE ROOTING. PREPARE SURFACE PROPERLY TO ACCEPT SEEDS. SOW SEEDS IN TWO OPPOSITE DIRECTIONS IN TWICE THE QUANTITY RECOMMENDED BY THE SEED PRODUCER.

Q. THE CONTRACTOR IS RESPONSIBLE TO ENSURE GROWTH OF THE SEEDED AND LANDSCAPED AREAS BY WATERING, STRAW, MULCH, NET, AND ANY OTHER PROPER LANDSCAPING METHOD NECESSARY. ALL AREAS MUST HAVE SUSTAINED GROWTH BY THE TIME OF COMPLETION OF PROJECT.

R. THE CONTRACTOR SHALL PROTECT ALL AREAS FROM WASHOUTS AND SOIL EROSION. STRAW BALES SHALL BE PLACED AT THE INLET APPROACH TO ALL NEW OR EXISTING CULVERTS.

1.12 MAINTAINING SITE CONDITIONS

A. THE CONTRACTOR IS RESPONSIBLE FOR MAINTAINING A NEAT AND ORDERLY PROJECT SITE. REMOVE AND DISPOSE OFF SITE ALL RUBBISH, WASTE, LITTER, AND ALL FOREIGN SUBSTANCES IN A LEGAL MANNER. REMOVE PETROCHEMICAL SPILLS, STAINS, AND OTHER FOREIGN DEPOSITS IN COMPLIANCE WITH OSHA REGULATIONS. RETURN ALL SURFACES TO ORIGINAL CONDITION. CONTRACTOR SHALL COMPLY WITH ALL BMP REQUIREMENTS.

B. THE CONTRACTOR SHALL COMPLY WITH ALL CMR AND BMP REQUIREMENTS.

1.13 CONCRETE

A. APPROVED CONCRETE MIX DESIGN IS REQUIRED PRIOR TO ORDERING AND PLACING CONCRETE.

B. ALL MATERIALS, LABOR, AND METHODS SHALL CONFORM TO ALL APPLICABLE ASTM AND ACI STANDARDS AND REQUIREMENTS. IT IS THE CONTRACTORS RESPONSIBILITY TO INSURE THAT ALL STANDARDS ARE MET, AND TO BE ABLE TO PRODUCE VERIFICATION OF THESE ITEMS UPON REQUEST.

C. THE CONTRACTOR WILL PROVIDE CONCRETE DELIVERY TICKETS TO SPECIFY THE TRUCK'S TIME OF DEPARTURE FROM THE BATCH PLANT AND THE DRUM ROTATION COUNTER NUMBER, AND THAT COPIES ARE PROVIDED TO THE AUTHORITY'S PROJECT MANAGER.

D. THE AUTHORITY'S PROJECT MANAGER, OR OTHER MEMBERS OF THE AUTHORITY OR THEIR DESIGNATED REPRESENTATIVE(S), WILL INSPECT THE PLACEMENT AND CONDITION OF THE STEEL REINFORCING AND WILL OBSERVE CONCRETE PLACEMENT.

E. THE CONTRACTOR IS ADVISED THAT FAILURE TO MEET THIS NOTIFICATION REQUIREMENT WILL RESULT IN ADDITIONAL TESTING AT THE CONTRACTOR'S EXPENSE.

F. THE CONTRACTOR WILL ENGAGE A CERTIFIED TESTING LAB, APPROVED BY THE AUTHORITY, TO BE ON–SITE DURING DELIVERY AND PLACEMENT OF CONCRETE. THE LAB WILL BE THE SOLE JUDGE OF THE ACCEPTABILITY OF THE CONCRETE ARRIVING AT THE SITE.

G. THE LAB WILL PROVIDE CONCRETE TESTING DURING PLACEMENT AND WILL INSPECT AND CERTIFY REINFORCING STEEL AND FORM WORK PRIOR TO PLACEMENT

H. THE CONTRACTOR WILL VERIFY THAT CONCRETE TESTS INCLUDE TIME OF PLACEMENT, TEMPERATURE, DRUM ROTATION, SLUMP, AND AIR ENTRAINMENT.

I. THE CONTRACTOR WILL VERIFY THAT TIME OF PLACEMENT WILL BE NO GREATER THAN NINETY MINUTES FROM DEPARTURE FROM THE BATCH PLANT. IF CONDITIONS PRECLUDE MEETING THE NINETY MINUTES REQUIREMENT, ALTERNATIVE METHODS WILL BE PROPOSED. METHODS ARE AT CONTRACTORS SOLE COST AND IN FULL COMPLIANCE WITH ALL REQUIREMENTS OF LAW AND INDUSTRY STANDARDS.

J. THE CONTRACTOR WILL VERIFY THAT SLUMP IS NO GREATER THAN SPECIFIED BY THE ENGINEER OF RECORD.

K. THE CONTRACTOR SHALL SCHEDULE ALL INSPECTIONS AT THE TESTING LABORATORY, AND INFORM [redacted] WITHIN 24 HOURS OF THE INSPECTION OR TEST. CYLINDERS SPECIMENS WILL BE MADE IN ACCORDANCE WITH ASTM C. TEST AGES OF THE SPECIMENS SHALL BE 3/7/28 DAYS. ONE SET OF SPECIMENS (ONE 3 DAY CYLINDER, ONE 7 DAY CYLINDER, TWO SPARE 28–DAY CYLINDERS) WILL BE MADE FOR APPROXIMATELY EVERY 50 CUBIC YARDS (38 CUBIC METERS) PLACED. EACH SET OF SPECIMENS WILL BE MOLDED FROM THE SAME BATCH OF CONCRETE AND WILL CONSIST OF ONE CYLINDER TO PROVIDE A 7–DAY COMPRESSIVE TEST (THE EXTRA CYLINDER WILL BE A BACK–UP IN THE EVENT OF AN OBVIOUS DEFECTIVE CYLINDER). SAMPLES REQUIRED ON ALL LA–RICS FOUNDATIONS ARE TO BE INCLUDED IN TESTING AND FINAL REPORTS.

L. ALL CONCRETE FOR THE PROJECT SHALL HAVE A 28–DAY STRENGTH OF 4,000 PSI (UNLESS OTHERWISE SPECIFIED) AND A SLUMP OF 6" MAXIMUM WITH THE MIXTURE PROPORTIONS MEETING ASTM AND ACI REQUIREMENTS. ALL ADMIXTURES AND MATERIALS FOR THE CONCRETE MIXTURE SHALL ALSO CONFORM TO PROPER ASTM REQUIREMENTS.

M. THE CONTRACTOR WILL INSTRUCT THE CONCRETE SUPPLIER TO HAVE AN APPROVED PLASTICIZER ON THE TRUCK TO AID IN THE POURING AND PLACING OF PIERS AND FOUNDATIONS.

N. AIR ENTRAINING AGENT SHALL BE USED IN ANY CONCRETE EXPOSED TO FREEZING TEMPERATURES.

O. THE CONTRACTOR IS RESPONSIBLE FOR ALL EMBEDMENT LOCATIONS, SIZES, AND PROPER ANCHORING TO HOLD THE ITEMS IN PLACE ACCURATELY.

P. CONTRACTOR WILL SUPPLY AND USE A RELEASING AGENT ON ALL FORMS. ANY ATTACHMENT TO EXISTING CONCRETE AREAS WILL BE DONE WITH SMOOTH DOWELS AT 18" O.C. WITH A MINIMUM 6" EMBEDMENT IN EACH DIRECTION AND AN APPROVED BONDING AGENT TO BE APPLIED TO THE EXISTING SURFACE.

[redacted]

NOTE: ALL INFORMATION IS SUBJECT TO FIELD VERIFICATION. ALL INFORMATION IS CONFIDENTIAL AND NOT FOR PUBLIC DISTRIBUTION WITHOUT WRITTEN CONSENT OF THE LOS ANGELES REGIONAL INTEROPERABLE COMMUNICATIONS SYSTEMS AUTHORITY.

LA-RICS
Los Angeles Regional Interoperable Communications System

[redacted]

GENERAL NOTES
GN2

[redacted]

1.13 CONCRETE (CONTINUE)

R. ALL EXPOSED CONCRETE WILL HAVE A UNIFORM FINISH AND BE SLOPED FOR DRAINAGE OFF THE SURFACE UNLESS OTHERWISE NOTED IN THE PLANS OR SPECIFICATIONS.

S. THE CONTRACTOR SHALL PROTECT THE CONCRETE FROM ANY ADVERSE WEATHER CONDITIONS; PREMATURE DRYING AND MECHANICAL INJURY TO INSURE PROPER CURING.

T. THE CONTRACTOR SHALL BE RESPONSIBLE FOR THE USE AND CONTROL OF ANY MECHANICAL EQUIPMENT TO INSURE THE PROPER PLACEMENT OF THE CONCRETE TO PREVENT ANY VOIDS OR CAPS.

U. THE CONTRACTOR WILL PROVIDE CONCRETE THAT IS MIXED AND PLACED ONLY WHEN THE TEMPERATURE IS AT LEAST FORTY (40) DEGREES F. AND RISING. WHEN TEMPERATURE IS NINETY (90) DEGREES F. OR ABOVE, OR IS LIKELY TO RISE ABOVE NINETY (90) DEGREES F. WITHIN THE TWENTY-FOUR (24) HOUR PERIOD AFTER CONCRETE PLACEMENT, THE CONTRACTOR WILL FOLLOW RECOMMENDATIONS OF ACI 305.

V. ALTERNATIVELY, WHEN THE TEMPERATURE OF THE SURROUNDING AIR IS BELOW FORTY DEGREES (40) F., CONCRETE WILL HAVE A TEMPERATURE BETWEEN SIXTY (60) DEGREES F. AND NINETY (90) DEGREES F. WHEN PLACING CONCRETE, THE CONTRACTOR WILL FOLLOW THE RECOMMENDATIONS OF ACI 306 OR THE LATEST VERSION.

W. THE CONTRACTOR WILL PROVIDE CONCRETE FOR DRILLED FOUNDATIONS THAT IS PLACED WITH A TREMIE HAVING A DIAMETER OF AT LEAST EIGHT TIMES THE MAXIMUM SIZE OF THE AGGREGATE. CONCRETE WILL BE PLACED WITH THE AID OF MECHANICAL VIBRATION EQUIPMENT APPLIED DIRECTLY TO THE CONCRETE FOR THE TOP 10 FEET. THE INTENSITY OF VIBRATION WILL BE SUFFICIENT TO CAUSE FLOW OR SETTLEMENT OF CONCRETE IN PLACE WITHOUT CAUSING SEGREGATION OF THE MIX.

X. ALL REINFORCING STEEL WILL BE NEW DEFORMED BARS, CONFORMING TO ASTM A-615 REFER TO STRUCTURAL SHEETS/NOTES. THE CONTRACTOR WILL PROVIDE CONCRETE THAT IS PLACED CONTINUOUSLY TO AVOID COLD JOINTS. COLD JOINTS ARE NOT PERMITTED AND WILL RESULT IN REJECTION OF THE STRUCTURE BY THE AUTHORITY.

Y. TIME OF PLACEMENT WILL BE NO GREATER THEN NINETY MINUTES FROM DEPARTURE FROM THE BATCH PLANT. DRUM ROTATIONS WILL BE THREE HUNDRED OR LESS. TEMPERATURE WILL BE EIGHTY DEGREES OR LESS. ALTERNATIVE METHODS WILL BE PROPOSED PROVIDED THAT SUCH ALTERNATIVE METHODS ARE AT CONTRACTORS' SOLE COST AND IN FULL COMPLIANCE WITH ALL REQUIREMENTS OF LAW AND INDUSTRY STANDARDS.

Z. CONTRACTOR TO PROVIDE DE-WATERING OF FOUNDATIONS AS NEEDED.

1.14 METALS

A. ALL METAL WORK SHALL BE IN ACCORDANCE WITH THE SPECIFICATION GALVANIZED ASTM A572 UNLESS OTHERWISE NOTED.

B. STRUCTURAL TUBING MEMBERS SHALL CONFORM TO ASTM A500, GRADE B.

C. ALL WELDING SHALL BE DONE USING E70XX ELECTRODES AND WELDING SHALL CONFORM TO AISC AND AWS D1.1. WHERE FILLET WELD SIZES, ARE NOT SHOWN, PROVIDE THE MINIMUM SIZE PER TABLE J2.4 IN THE AISC "MANUAL OF STEEL CONSTRUCTION", 9TH EDITION.

D. BOLTED CONNECTIONS SHALL USE BEARING TYPE GALVANIZED ASTM A325 BOLTS (3/4" DIA.) AND SHALL HAVE A MINIMUM OF TWO BOLTS U.N.O.

E. NON-STRUCTURAL CONNECTIONS FOR HANDRAIL, LADDERS AND STEEL GRATING MAY USE 5/8" DIA. GALVANIZED ASTM A307 BOLTS U.N.O.

F. IF FIELD WELDING IS APPROVED, FOLLOW AWS STANDARDS. SPECIAL INSPECTION IS REQUIRED.

G. ALL WELDING PROCESSES AND WELDING OPERATIONS WILL BE QUALIFIED IN ACCORDANCE WITH AMERICAN WELDING SOCIETY (AWS) STANDARD QUALIFICATION PROCEDURE.

H. SUBMIT 6 SETS OF SHOP DRAWINGS TO THE ARCHITECT/ ENGINEER FOR REVIEW BEFORE FABRICATION/ CONSTRUCTION.

I. ALL EPOXY ANCHORS SHALL USE THE HILTI HIT HY 150 INJECTION ADHESIVE ANCHOR SYSTEM, SIZE AS INDICATED ON THE PLANS, (ICBO #5193, LARR #25257). OR APPROVED EQUAL, SUBJECT TO APPROVAL BY STRUCTURAL ENGINEER OF RECORD.

J. ALL EXPANSION ANCHORS SHALL BE HILTI KB-TZ ANCHORS, SIZE AS INDICATED ON THE PLANS (ESR-1917) OR APPROVED EQUAL. SUBJECT TO APPROVAL BY STRUCTURAL ENGINEER OF RECORD.

K. ON SITE WELDING IS NOT PERMITTED, UNLESS PROVIDED WRITTEN APPROVAL BY GENERAL DYNAMICS / MOTOROLA. ANY FIELD WELDING SHALL BE COMPLETED BY A CERTIFIED LICENSED WELDER AND OBSERVED/INSPECTED BY JURISDICTIONAL APPROVED INSPECTOR. ALL WELDS MUST BE TREATED WITH CORROSION RESISTANT PAINT.

L. THE USE OF A36 MODIFIED MATERIAL TO OBTAIN 50 KSI MINIMUM YIELD STRENGTH IS PROHIBITED. UTILIZING MILL CERTIFICATIONS TO OBTAIN MINIMUM YIELD STRENGTHS IS PROHIBITED.

M. THE CONTRACTOR WILL FURNISH ALL MATERIALS TO BE NEW AND OF THE BEST QUALITY AS MEASURED BY THE HIGHEST STANDARDS OF THE TRADE. ALL DEFECTS WILL BE CAUSE FOR REJECTION BY THE AUTHORITY. THE CONTRACTOR WILL HAVE AVAILABLE THE MILL CERTIFICATES FOR ALL MATERIALS FURNISHED AND WILL BE SUBMITTED UPON REQUEST.

1.15 WARRANTIES

A. THE CONTRACTOR SHALL WARRANTY ALL GENERAL WORK FOR A MINIMUM OF 12 MONTHS OR AS STATED ELSEWHERE IN THE CONTRACT.

B. ROOF WARRANTY: ALL WORK ON ROOFS SHALL BE PERFORMED IN FULL COMPLIANCE WITH THE ROOF MANUFACTURER THAT THE WARRANTY REMAINS VALID AFTER CONSTRUCTION IS COMPLETE.

1.16 ANTENNAS AND CABLES

A. THE CONTRACTOR IS RESPONSIBLE FOR THE PROPER STORAGE AND HANDLING OF ALL MATERIALS ONCE THEY HAVE BEEN RELEASED FROM THE WAREHOUSE.

B. INSTALLATION OF ALL MATERIALS SHALL BE DONE IN STRICT ADHERENCE TO MANUFACTURER'S RECOMMENDATIONS INCLUDING. R56 SPEC'S.

C. THE CONTRACTOR SHALL PERFORM THE SWEEP TESTING WITH A WILTRON METAL 350 OR EQUAL, AND PROVIDE TWO COPIES TO GENERAL DYNAMICS / MOTOROLA. THE REQUIREMENTS FOR THE TESTING RESULTS WILL BE ISSUED FROM [redacted] PRIOR TO THE START OF THE PROJECT. THE CONTRACTOR IS TO FILL OUT AN ANTENNA SITE SUBMISSION FORM (SEE PART FOUR) AND (1) COMPLETE SWEEP TEST WITH ANTENNA INFORMATION FORM TO BE LEFT INSIDE SHELTER AT SITE.

D. TOWER TECHNICIANS MUST BE CURRENT ANDREWS AND COMMSCOPE CERTIFIED FOR CABLE CONNECTOR INSTALLATIONS. ALL COAX TO BE USED MUST BE ANDREWS OR COMMSCOPE MANUFACTURED

E. THE FOLLOWING TABLE WILL BE USED TO DETERMINE THE MINIMUM RADIUS OF EACH CABLE (VERIFY WITH MANUFACTURER'S SPECIFICATIONS:

ANDREW BENDING RADIUS

DIAM. OF CABLE	LDF#	RADIUS
1/2"	4	5"
7/8"	5	10"
1-1/4"	6	15"
1-5/8"	7	20"
2-1/4"	12	24"

COMMSCOPE BENDING RADIUS

DIAM. OF CABLE	TYPE	RADIUS
1/2"	FXL780	4"
7/8"	FXL780	8"
1-5/8"	FXL780	15"

[redacted]

F. THE CONTRACTOR SHALL RUN ALL LINES AND CONDUITS IN A NEAT, ORDERLY AND STRAIGHT FASHION PROVIDING ANCHORING AS RECOMMENDED BY THE MANUFACTURER AND/ OR STRUCTURAL ANALYSIS RECOMMENDATIONS TO SUPPORT THE LINES PROPERLY.

G. THE CONTRACTOR WILL ROUTE ALL POWER, SIGNAL, AND TRANSMISSION LINE CABLES ACCORDING TO MOTOROLA R-56 SITE INSTALLATION, GROUNDING, AND LIGHTNING PROTECTION GUIDELINES. CABLES WILL BE APPROPRIATELY SEPARATED BASED ON TYPE TO PREVENT INTERFERENCE.

H. ALL EQUIPMENT WILL PRESENT A NEAT SYMMETRICAL APPEARANCE AND BE INSTALLED IN A HIGHLY STABLE AND RIGID MANNER MEETING LOCAL AND ZONE 4 SEISMIC REQUIREMENTS.

I. THE CONTRACTOR TO PROVIDE ALL REQUIRED CRANES, MANPOWER, VEHICLES AND PERMITS TO SUPPORT INSTALLATION.

1.17 ELECTRICAL

A. THE CONTRACTOR IS RESPONSIBLE FOR ALL PERMITTING, FILING, AND FEES IN CONJUNCTION WITH THE PROJECT.

B. THE CONTRACTOR SHALL SCHEDULE ALL NECESSARY INSPECTIONS WITH THE PROPER AUTHORITIES AND INFORM GENERAL DYNAMICS / MOTOROLA 24-HOURS IN ADVANCE. ALL TICKETS AND INSPECTION VERIFICATIONS WILL BE SUBMITTED TO GENERAL DYNAMICS / MOTOROLA WITHIN THE CLOSEOUT PACKAGE.

C. ALL LABOR AND MATERIAL SHALL CONFORM TO ALL LOCAL, STATE, AND NATIONAL CODES, RULES, REGULATIONS AND STANDARDS.

D. ALL EQUIPMENT, WIRING, AND MATERIALS MUST HAVE A UL LABEL AND INSTALLED PER MANUFACTURER SPECIFICATIONS.

E. ALL WORK SHALL BE DONE BY QUALIFIED AND EXPERIENCED JOURNEYMEN AND PERFORMED IN A WORKMANLIKE MANNER AND SHALL PROCEED IN AN ORDERLY MANNER SO AS NOT TO HOLDUP THE PROGRESS OF THE PROJECT.

F. CONTRACTOR TO VERIFY ALL LINES, FEEDERS, EQUIPMENT, AND DEVICES INSTALLED PER CD'S TO ASSURE PROPER OPERATION (PER NEC NFPA 70) PRIOR TO GENERATOR START UP.

G. CONDUITS AND FITTINGS FOR OUTSIDE/ABOVE GROUND APPLICATIONS SHALL BE RIGID CONDUIT AND FITTINGS FOR INSIDE BUILDING RUNS, ABOVE CEILINGS SHALL BE EMT. SUPPORT ALL CONDUITS WITHIN 3 FT. OF ALL JUNCTION BOXES AND AT 8 FT. INTERVALS OR LESS AS NEEDED WITHIN APPROVED ANCHORING DEVICES. ALL CONNECTORS AND COUPLINGS SHALL BE OF THREADED OR COMPRESSION TYPE.

1.17 ELECTRICAL (CONTINUE:)

H. ALL WIRES SHALL BE COPPER; USE OF ALUMINUM CONDUCTORS WILL NOT BE PERMITTED. SEE ELECTRICAL PLANS FOR SIZING AND LOCATIONS. USE PROPER SIZE CONNECTORS PER LOCAL, STATE, AND NATIONAL CODES.

I. CONDUCTOR LENGTHS SHALL BE CONTINUOUS FROM TERMINATION TO TERMINATION WITHOUT SPLICES.

J. PROVIDE PULL BOXES WHERE SHOWN AND WHERE REQUIRED BY CODES AND UTILITY COMPANIES.

K. ALL CONDUIT ROUTES SHALL BE COORDINATED WITH THE MECHANICAL EQUIPMENT TO AVOID LOCATION CONFLICTS. CONTRACTOR SHALL VERIFY ALL LOCATIONS.

L. ALL CONDUITS SHALL BE TAGGED/IDENTIFFIED INSIDE ALL PULL BOXES, J-BOXES, AND CABINETS WITH P-TOUCH TYPE PRINTED LABELS. (1/2" LABEL, WHITE FACE WITH BLACK LETTERING)

M. ALL BREAKERS IN LOAD CENTER SHALL BE IDENTIFIED WITH TYPE WRITTEN LABELS NEATLY PLACED ALONG SIDE OF THE BREAKER.

N. ALL GROUND BARS SHALL BE 4"x1/4"x LENGTH AS NOTED, UNLESS OTHERWISE NOTED AND SHALL BE COPPER AND LARGE ENOUGH TO ACCOMMODATE THE REQUIRED NUMBER OF GROUNDING CONNECTIONS. THE HARDWARE SECURING ALL GROUND BARS SHALL BOND THEM TO THE STRUCTURE TO WHICH THEY ARE FASTENED. ALL FASTENERS SHALL BE STAINLESS STEEL. COPPER SHALL NOT MAKE PHYSICAL CONTACT TO GALVANIZED STEEL STRUCTURE. DOUBLE STACKING LUGS OR "SANDWICHING" NOT PERMITTED.

O. ANY PENETRATIONS MADE BY THE CONTRACTOR THROUGH WALLS, CEILINGS, FLOORS, ROOFS OR ANY OTHER SURFACE SHALL BE CORE DRILLED AND SEALED ACCORDING TO EXISTING FIRE RATING. CONTRACTOR IS RESPONSIBLE TO FIELD VERIFY. REFER TO LOCAL JURISDICTION CODES IF APPLICABLE.

P. THE MATERIALS AND EQUIPMENT INFORMATION ON THESE DRAWINGS ARE BASED ON THE BEST AVAILABLE INFORMATION AT THE TIME THE DRAWINGS ARE ISSUED. CHANGES MAY OCCUR, AND THE CONTRACTOR SHALL VERIFY ALL ITEMS PRIOR TO PLACEMENT, AND MAKE ANY CORRECTIONS WITHOUT FURTHER COST TO [redacted]

Q. ALL EXTERIOR & ABOVE GROUND CONDUITS SHALL BE RIGID GALVANIZED STEEL.

R. ALL CONTRACTORS ARE REQUIRED TO INITIATE COORDINATION WITH EXISTING FACILITY FM DEPARTMENT AND COMPLY WITH ALL LOCAL REQUIREMENTS FOR EACH FACILITY AND IN ACCORDANCE WITH CAL-OSHA GUIDELINES.

1.18 GROUNDING

A. THE CONTRACTOR SHALL VERIFY WITH GENERAL DYNAMICS / MOTOROLA THAT ALL CONDUIT SYSTEMS., EQUIPMENT, DEVICES, PANELS, LINES, TRAYS, BRIDGES, PLATFORMS, AND ANY/ ALL ITEMS ARE GROUNDED PROPERLY PER R56 SPECS.

B. THE GROUNDING SYSTEM CONNECTIONS SHALL BE MADE WITH EXOTHERMIC WELDS AND/ OR MECHANICAL TWO-LUG COMPRESSION CONNECTORS AS INDICATED ON PLANS. USE ONLY STAINLESS STEEL SCREWS, BOLTS, WASHERS, AND NUTS FOR FASTENING. ALL FASTENERS SHALL BE STAINLESS STEEL. COPPER SHALL NOT MAKE PHYSICAL CONTACT TO GALVANIZED STEEL STRUCTURE.

C. CLEAN SURFACES THOROUGHLY BEFORE APPLYING GROUND LUGS OR CLAMPS. IF SURFACE IS COATED, THE COATING MUST BE REMOVED DOWN TO THE BARE METAL. AFTER THE COATING HAS BEEN REMOVED, APPLY A NON-CORROSIVE APPROVED COMPOUND TO THE CLEANED SURFACE AND INSTALL LUGS OR CLAMPS. WHERE GALVANIZING IS REMOVED FROM METAL, IT SHALL BE PAINTED OR TOUCHED UP WITH COLD GALVANIZING PAINT SUCH AS GALVAX OR EQUAL.

D. ALL CLAMPS, SLEEVES, AND SUPPORTS USED TO SUPPORT OR CHANNEL THE GROUNDING SYSTEM CONDUCTORS SHALL BE SCHEDULE 80 PVC. DO NOT USE METAL BRACKETS OR SUPPORTS THAT WOULD FORM A COMPLETE RING AROUND ANY GROUNDING CONDUCTOR.

E. ALL MECHANICAL GROUNDING CONNECTIONS SHALL BE COATED WITH GENERIC COPPER SHIELD ANTI-CORROSIVE AGENT. NO SUBSTITUTIONS ARE PERMITTED. VERIFY THE PRODUCT WITH [redacted] PRIOR TO USAGE.

F. GROUND, CABLE TRAYS AND RACKS, AND ANY OTHER METALLIC COMPONENTS WITH #2 GROUNDING CONDUCTORS, AND CONNECT TO THE SURFACE-MOUNTED GROUND BARS. CONNECTION DETAILS SHALL BE PERFORMED PER THE MANUFACTURER'S SPECIFICATIONS AND RECOMMENDATIONS UNLESS OTHERWISE SPECIFIED.

G. CLAMP-ON RESISTANCE OR INDUCED FREQUENCY TESTS WITH CLAMP-ON GROUND RESISTANCE TESTER.

H. THE ANTENNA CABLES SHALL BE GROUNDED AT THE TOP AND BOTTOM OF THE VERTICAL RUN FOR LIGHTNING PROTECTION. THE ANTENNA CABLE SHALL BE BONDED TO A COPPER GROUND BAR AT THE LOWER MOST POINT OF A VERTICAL RUN JUST BEFORE IT BEGINS TO BEND TOWARD THE HORIZONTAL PLANE. WIRE RUNS TO GROUND SHALL BE KEPT AS STRAIGHT AND SHORT AS POSSIBLE. THE ANTENNA CABLE SHALL BE GROUNDED JUST BEFORE ENTERING THE SHELTER/EQUIPMENT. ANY TOWERS WITH MULTIPLE BROADCAST TRANSMITTERS PRESENT AND OVER 200 FEET SHALL ALSO BE EQUIPPED WITH ADDITIONAL GROUNDING AT EQUAL INTERVALS.

I. THE CONTRACTOR, UPON COMPLETION OF THE GROUNDING SYSTEM, SHALL SCHEDULE A TEST OF THE SYSTEM. [redacted] REPRESENTATIVE WILL BE INFORMED 48 HOURS IN ADVANCE OF THE TEST.

J. WHEN USING OR CONNECTING TO AN EXISTING GROUND RING, TEST GROUND RING PRIOR TO AND AFTER CONNECTION TO THE EXISTING GROUND RING.

LA-RICS
Los Angeles Regional Interoperable Communications System

[redacted]

GENERAL NOTES
GN3

[redacted]

NOTE: ALL INFORMATION IS SUBJECT TO FIELD VERIFICATION. ALL INFORMATION IS CONFIDENTIAL AND NOT FOR PUBLIC DISTRIBUTION WITHOUT EXPRESS CONSENT OF THE LOS ANGELES REGIONAL INTEROPERABLE COMMUNICATIONS SYSTEMS AUTHORITY.

1.19 DIGGING AND SPILLS:

A. COMPLETE ALL BELOW GRADE TOWER/PAD FOUNDATION, GROUNDING AND CONDUITS FIRST AND REPAIR TO MINIMIZE EROSION AND MUD WASH. (IF APPLICABLE)

B. CONTRACTOR RESPONSIBLE TO CONTACT DIG ALERT, POWER COMPANY AND OTHERS TO OBTAIN UNDERGROUND CLEARANCE TO DIG. CONTRACTOR RESPONSIBLE FOR PRIVATE GROUND PENETRATING RADAR SURVEYS (AS REQUIRED).

C. HAND DIGGING MAY BE REQUIRED FOR THE ICE BRIDGE POSTS NEAR OTHER SERVICES. PLAN ACCORDINGLY.

D. DUST, EROSION AND SPILL MITIGATION REQUIRED THROUGHOUT THE ENTIRE PROCESS USING BEST BUSINESS PRACTICES. ALL ENVIRONMENTAL, EROSION PLANS AND SAFETY LAWS TO BE ADHERED TO AT ALL TIMES.

E. CONTRACTOR TO PROVIDE SILT FENCING AROUND PROJECT WORK AREA TO PREVENT EROSION. REMOVE AND DISPOSE OF AT THE END OF THE PROJECT. (IF APPLICABLE)

F. ANY DISTURBED SOIL/VEGETATION MUST BE RETURNED TO PRE-CONSTRUCTION CONDITION.

G. CONTRACTOR TO CONSTRUCT A TEMPORARY CONCRETE WASHOUT. DEMO AND DISPOSE OF HARDENED CONCRETE AND RESTORE AREA TO ORIGINAL STATE. (IF APPLICABLE)

H. 24HR NOTICE TO GDIT ON OPEN TRENCHES, CONCRETE POURS, ETC.

I. BACKFILL TRENCHES AS CALLED OUT ON THE DRAWINGS OR PER THE UTILITY COMPANY'S CODE. RESTORE ALL DISTURBED AREAS WITH STRAW & SEED. INCLUDE IN TRENCHING COSTS. (IF APPLICABLE)

J. HAUL OFF AND PROPERLY DISPOSE OF EXTRA DIRT/MATERIALS FROM FOUNDATIONS IF IT CAN NOT BE USED ON SITE.

PART 2 – PRODUCTS

2.1 GENERAL

A. GENERAL REQUIREMENTS: ALL MATERIALS AND EQUIPMENT SHALL BE IN ACCORDANCE WITH CONTRACT DOCUMENTS AND STANDARD PRODUCTS OF THE VARIOUS MANUFACTURERS, WITH ALL MATERIALS AND EQUIPMENT TO BE NEW, CLEAN, UNDAMAGED, AND FREE OF DEFECTS AND CORROSION.

B. ACCEPTABLE PRODUCTS: THE PRODUCT OF SPECIFIED OR APPROVED MANUFACTURER WILL BE ACCEPTABLE ONLY WHEN THE PRODUCT MEETS QA REQUIREMENTS.

C. COMMON ITEMS: WHERE MORE THAN ONE OF ANY SPECIFIC ITEM IS REQUIRED, ALL SHALL BE OF THE SAME TYPE AND MANUFACTURER.

D. UL LISTING: ALL MATERIALS AND EQUIPMENT SHALL BE UNDERWRITERS LABORATORIES (UL) LISTED AND LABELED, WHERE UL STANDARDS AND LISTINGS EXIST FOR SUCH MATERIALS OR EQUIPMENT.

2.2 GROUNDING

A. RACEWAY SIZING: AS REQUIRED BY NEC (MINIMUM) WITH OVERSIZED RACEWAYS AS INDICATED ON DRAWINGS. MINIMUM CONDUIT SIZE: 3/4 INCH, UNLESS INDICATED OTHERWISE.

B. RACEWAY TYPES: RIGID GALVANIZED STEEL CONDUIT, ELECTRICAL METALLIC TUBING (EMT), FLEXIBLE STEEL CONDUIT, LIQUID-TIGHT FLEXIBLE STEEL CONDUIT, SCHEDULE 40 HEAVY WALL, AND SCHEDULE 80 EXTRA HEAVY WALL RIGID NONMETALLIC.

C. FITTINGS: ALL RACEWAY FITTINGS (EXCEPT FOR RIGID NONMETALLIC CONDUIT) TO BE STEEL OR MALLEABLE IRON, AND UL LISTED FOR THE INTENDED APPLICATION. EMT FITTING TO BE COMPRESSION TYPE.

D. OUTLET BOXES (SURFACE MOUNTED): CADMIUM PLATED CAST OR MALLEABLE IRON.

E. PULL AND JUNCTION BOXES AND WIREWAYS: USE AS INDICATED AND REQUIRED. JUNCTION BOXES FOR GENERAL INDOOR USE (DRY LOCATIONS) TO BE OF GALVANIZED CODE GAUGE STEEL CONSTRUCTION MINIMUM 4" SQUARE x 1-1/2" DEEP WITH SCREW-ON COVERS. WIREWAYS TO BE UL LISTED, SHEET STEEL CONSTRUCTION WITH SCREW-ON COVERS. FOR EXTERIOR AND DAMP OR WET INDOOR LOCATIONS, USE BOXES AND WIREWAYS APPROVED FOR SUCH USE.

F. PIPE SLEEVES: RIGID STEEL CONDUIT OR IRON PIPE.

G. CONDUIT SEALS FOR CAST-IN-PLACE CONCRETE APPLICATIONS-ACCEPTABLE MANUFACTURERS: O-Z/ GEDNEY TYPE "FSK"; THUNDERLINE CORPORATION "LINK SEAL" WITH "LINK SEAL WITH SLEEVE" FOR CORE-DRILLED AND PRE-CAST OPENING APPLICATIONS-ACCEPTABLE MANUFACTURERS: O-Z/ GEDNEY TYPE "CSML"; THUNDERLINE CORPORATION "LINK SEAL".

H. SWEEPS: ALL SWEEPS FOR COMMUNICATION EQUIPMENT OR CONCRETE PAD SHALL BE MIN. 24" RADIUS.

2.3 CONDUCTORS – 600 VOLT AND BELOW

A. GENERAL: SINGLE-CONDUCTOR 98% CONDUCTIVITY, ANNEALED, NON-COATED COPPER CONDUCTORS WITH 600-VOLT RATED TYPE "THHN/ THWN " INSULATION.

B. CONNECTORS: NYLON SHELL INSULATED METALLIC SCREW-ON CONNECTORS FOR #14-#10 AWG, AND BOLTED PRESSURE OR COMPRESSION TYPE LUGS AND CONNECTORS WITH INSULATING COVERS FOR #8 AWG AND LARGER.

2.4 HANGERS AND SUPPORTS

A. GENERAL: ALL HANGERS, SUPPORTS, FASTENERS AND HARDWARE SHALL BE HOT DIPPED GALVANIZED OR EQUIVALENT CORROSION RESISTANCE BY TREATMENT, AND SHALL BE MANUFACTURED PRODUCTS DESIGNED FOR THE APPLICATION.

B. TYPES: HANGERS, STRAPS, RISER SUPPORTS, CLAMPS, U-CHANNEL, THREADED RODS, ETC. AS INDICATED OR REQUIRED.

2.5 ELECTRICAL IDENTIFICATION

A. NAME PLATES: LAMINATED PLASTIC WITH MINIMUM 1/4" HIGH BLACK ENGRAVED CHARACTERS ON WHITE BACKGROUND.

B. FASTENERS: DOUBLE SIDED 3/4" ADHESIVE TAPE.

C. UNDERGROUND WARNING TAPE: SIX-INCH WIDE POLYETHYLENE TAPE. PERMANENTLY BRIGHT COLORED WITH CONTINOUS-PRINTED LEGEND INDICATING GENERAL TYPE OF UNDERGROUND LINE BELOW AND "CAUTION". COLORS AS FOLLOWS:

1. RED = ELECTRIC
2. ORANGE = COMMUNICATIONS

D. MARKING PENS: PERMANENT, WATERPROOF, QUICK DRYING BLACK INK. ACCEPTABLE MANUFACTURERS: SANFORD FINE POINT "SHARPIE", OR EQUAL.

E. WIRE TAGS: VINYL OR VINYL-CLOTH SELF-ADHESIVE WRAPAROUND TYPE INDICATING APPROPRIATE CIRCUIT NUMBER, ETC.

2.6 ENCLOSURES

A. DRY LOCATION, INDOOR – NEMA 1.

B. WET LOCATION OR OUTDOOR – NEMA 3R.

C. OTHER – IF APPROVED, 5000 FT. AMSL SITE, HIGH BERAT – NEMA 4R

2.7 GROUNDING

A. SYSTEM DESCRIPTIONS: GROUNDING NETWORK SYSTEM SHALL ESTABLISH AN EARTH-RESISTANCE TO THE REFERENCE GROUND POINT NOT TO EXCEED 5 OHMS FOR BUILDING, CONSISTING OF BONDING OF STRUCTURE AND OTHER METAL OBJECTS INCLUDING GROUNDING ELECTRODES AND INTERCONNECTING CONDUCTORS. THIS SHALL BE PERFORMED WITH CLAMP-ON RESISTANCE OR INDUCED FREQUENCY TEST W/ CLAMP ON GROUND RESISTANCE TESTER.

B. MATERIALS-INDICATED AS FOLLOWING:

1. WATER SERVICE METALLIC PIPE
2. BUILDING STEEL
3. CONDUCTORS: COPPER STRANDED OR SOLID TINNED BARE SIZE AS INDICATED
4. GROUND RODS: 5/8" DIA. x 10'-0" LONG COPPER CLAD GROUND ROD
5. CHEMICAL GROUND RODS: XIT GROUND ROD 10'-0" STRAIGHT SHAFT TYPE
6. COMPRESSION: HYGROUND AS MANUFACTURED BY FCI BURNDY. CONNECTIONS SHALL BE PROTECTED FROM CORROSION AS MANUFACTURED BY ZRC CHEMICAL PRODUCTS CO., AS NEEDED.
7. CONNECTIONS: DOUBLE HOLE LUGS FOR ALL MECHANICAL CONNECTIONS
8. EXOTHERMIC: EXOTHERMIC WELD WITH PROPER MOLDS

2.8 SAFETY SWITCHES

A. GENERAL: HEAVY DUTY HORSEPOWER RATED, FULLY ENCLOSED, FUSIBLE (WITH REJECTION FUSE CLIPS) OR NON-FUSED AS INDICATED, QUICK-MAKE, QUICK BREAK SWITCHING MECHANISM INTERLOCKED WITH COVER AND NEMA 1 ENCLOSURE FOR DRY LOCATIONS, AND NEMA 3R ENCLOSURE FOR OUTDOOR LOCATIONS, UNLESS INDICATED OTHERWISE. SWITCHES TO BE LABELED AS "SUITABLE FOR USE AS SERVICE ENTRANCE EQUIPMENT", WHERE REQUIRED.

B. RATINGS: VOLTAGE, PHASES, AMPERAGES, AND FUSING AS INDICATED.

2.8 SAFETY SWITCHES (CONTINUE)

C. IN THE FUSED CONFIGURATION, SWITCHES SHALL HAVE THE INTERRUPTING CAPACITY OF AT LEAST 100,000 AMPS SYMMETRICAL AT SIX HUNDRED (600) VOLTS WHEN USED WITH CLASS RK5 TIME DELAY CURRENT LIMITING FUSES, AND 200,000 AMPS SYMMETRICAL AT 600 VOLTS WHEN USED WITH RK1 CURRENT LIMITING FUSES.

D. LINE SHIELD GUARDS TO PREVENT CONTACT WITH LIVE PARTS.

E. CONTACTS: SILVER ALLOY: SWITCH BLADES SHALL BE DE-ENERGIZED IN THE OPEN POSITION.

F. LUGS: COMPRESSION 2 HOLE LUGS TO BE USED. INDOOR: WITH INSPECTION WINDOW AND COLOR COORDINATED HEAT SHRINK. OUTDOOR: WITHOUT INSPECTION WINDOW AND COLOR COORDINATED UV RATED HEAT SHRINK.

G. REJECTION FUSE CLIPS: PROVIDE FOR FUSIBLE SWITCHES (30-600A) TO PREVENT INSTALLATION OF CLASS H AND CLASS K NON-CURRENT, LIMITING FUSES.

H. ACCEPTABLE MANUFACTURERS: GENERAL ELECTRIC, SQUARE D TYPE QC, SIEMENS.

2.9 FUSES

A. UL CLASS RK1, 250 VOLT OR 600 VOLT AS REQUIRED FOR SYSTEM VOLTAGE, DUAL ELEMENT, TIME DELAY CURRENT-LIMITING, 200,000 A/C, AMPERE RATINGS AS INDICATED. SIZE AND QUANTITY AS INDICATED ON POWER DIAGRAM.

B. ACCEPTABLE MANUFACTURERS: BUSSMAN "FUSETRON", OR EQUAL BY FERRAZ SHAWMUT.

2.10 CIRCUIT BREAKERS

A. GENERAL: MOLDED CASE WITH THERMAL AND MAGNETIC TRIPS UNLESS INDICATED OTHERWISE. MINIMUM 10,000 AMPS INTERRUPTING CAPACITY, HIGHER RATINGS AS INDICATED OR REQUIRED BY AVAILABLE FAULT CURRENT.

B. CIRCUIT BREAKERS FOR EXISTING EQUIPMENT SHALL BE FROM THE SAME MANUFACTURER AS THE ORIGINAL EQUIPMENT.

2.11 LOAD CENTER/ PANEL BOARDS

A. GENERAL: TWO-ROW CIRCUIT BREAKER WITH MAINS, RATINGS AND BRANCH DEVICES AS INDICATED.

B. MINIMUM 10,000 A/C FOR 208V/ 240V UNLESS OTHERWISE NOTED.

C. LOCKABLE OVER, COPPER BUS.

D. LOAD CENTER SHALL HAVE MAIN CIRCUIT BREAKER (LOCKABLE IN ON & OFF POSITIONS).

E. COPPER GROUND BARS (ALUMINUM COMPONENTS IN ELECTRICAL DEVICES PROHIBITED). ISOLATED NEUTRAL BUS AND FULL SIZE GROUNDING BUS.

F. ACCEPTABLE MANUFACTURERS: GE, SQUARE D TYPE QC, SEIMENS, OR EQUIVALENT.

2.12 DEVICES

A. SWITCHES: 20 AMP, 120-277 VOLTS, A.C. ONLY TOGGLE TYPE, SINGLE POLE, DOUBLE POLE, 3-WAY, OR 4-WAY TIMER STYLE AS INDICATED OR REQUIRED.

B. RECEPTACLES: 20 AMP, 120V, NEMA 5 208V DUPLEX TYPE, FOR INDOOR MOUNTED, USE STAINLESS STEEL COVER. FOR OUTDOOR OR WET LOCATION MOUNTED. USE DEVICE RATED FOR USE. PROVIDE GFCI TYPE WITH SOLID STATE GROUND FAULT SENSING & 6 MA TRIP FOR OUTDOOR OR WET LOCATIONS.

C. AUXILIARY POWER (GENERAL INLET): PROVIDE 3-POLE, 4W, 125/250 VOLT FLANGED INLET, BACKBOX AND CLOSURE PLUG AT EXTERIOR OF BUILDING WALL (APPLETON #AJA2003-200RS WITH MATCHING BACKBOX AND CLOSURE PLUG.)

2.13 CABLE TRAY

A. PROVIDE A COMPLETE CABLE TRAY SYSTEM WITH BENDS, FITTINGS, ACCESSORIES, ETC. AS REQUIRED.

B. DESCRIPTION: ALUMINUM ALLOY CONSTRUCTION. TYPE: LADDER WITH 12" MAXIMUM SPACING. DEPTH: MINIMUM 4". WIDTH: AS INDICATED ON DRAWINGS, (MINIMUM 12" HORIZONTAL RUNS, MINIMUM 6" VERTICAL RUNS). SUPPORT SPAN: 8 FOOT MINIMUM, UNLESS OTHERWISE NOTED. LOADING: 300 POUNDS/ FOOT. RADIUS: 36" MINIMUM, (SMALLER RADIUS MAY BE PERMITTED IF APPROVED BY GENERAL DYNAMICS / MOTOROLA). COVER: VENTILATED .063 ALUMINUM, PROVIDE WHERE INDICATED.

C. ACCEPTABLE MANUFACTURERS: PW INDUSTRIES, B-LINE, COPE, OR EQUAL

2.14 SURGE SUPPRESSION

A. PRODUCTS MANUFACTURED BY ATLANTIC SCIENTIFIC OR EQUAL

B. FURNISHED BY AND INSTALLED BY CONTRACTOR.

[redacted]

NOTE: ALL INFORMATION IS SUBJECT TO FIELD VERIFICATION. THE INFORMATION IS CONFIDENTIAL AND NOT FOR PUBLIC DISTRIBUTION WITHOUT THE CONSENT OF THE LOS ANGELES REGIONAL INTEROPERABLE COMMUNICATIONS SYSTEMS AUTHORITY.

LA-RICS
Los Angeles Regional Interoperable Communications System

[redacted]

GENERAL NOTES
GN4

[redacted]

PART 3 – EXECUTIONS

3.1 GENERAL

A. THE INSTALLATION OF ALL WORK SHALL BE IN ACCORDANCE WITH THE INTENT OF THE CONTRACT DOCUMENTS.

B. INSTALLATION REQUIREMENTS: ALL MATERIALS AND EQUIPMENT SHALL BE INSTALLED AS RECOMMENDED BY THE RESPECTIVE MANUFACTURERS, BY MECHANICS EXPERIENCED AND SKILLED IN THEIR TRADE, IN A NEAT AND WORKMANLIKE MANNER IN ACCORDANCE WITH THE STANDARDS OF THE TRADE, AND SO AS NOT TO VOID ANY WARRANTY OF UL LISTING.

C. ADMINISTRATION AND SUPERVISION: ALL WORK SHALL BE PERFORMED UNDER THE CONTRACTOR'S DIRECT SUPERVISION, USING SUFFICIENT AND QUALIFIED PERSONNEL AS NECESSARY TO COMPLETE THE WORK IN ACCORDANCE WITH THE PROGRESS SCHEDULE. THE CONTRACTOR SHALL ASSIGN ONE OR MORE COMPETENT SUPERVISORS WHO SHALL HAVE AUTHORITY TO ACCEPT AND EXECUTE ORDERS AND INSTRUCTIONS, AND WHO SHALL COOPERATE WITH THE CONTRACTORS, THE ENGINEER, AND [redacted] IN ALL MATTERS TO RESOLVE CONFLICTS AND AVOID DELAYS.

D. MINIMUM MOUNTING HEIGHT: INSTALL EXPOSED RACEWAY AND ALL OTHER EQUIPMENT (EG, LIGHTING FIXTURES) WITH NOT LESS THAN 7'–6" CLEAR TO FINISHED FLOOR, UNLESS INDICATED OR APPROVED OTHERWISE, AND EXCLUDING RACEWAY AND EQUIPMENT MOUNTED ON WALLS. MAINTAIN SAFE LAYOUT WITH MINIMUM HEAD ROOM UNLESS ACCESS IS LIMITED.

E. DIMENSIONS AND CLEARANCES: FIELD MEASURE ALL DIMENSIONS AND CLEARANCES AFFECTING THE INSTALLATION OF ELECTRICAL WORK, IN RELATION TO ESTABLISHED DATUM, BUILDING OPENINGS AND CLEARANCES, AND WORK OF OTHER TRADES, AS CONSTRUCTION PROGRESSES.

3.2 EXAMINATION

A. CONDITION VERIFICATION: EXAMINE THE AREAS AND CONDITIONS UNDER WHICH THE WORK IS TO BE PERFORMED, AND IDENTIFY ANY CONDITIONS DETRIMENTAL TO THE PROPER AND TIMELY COMPLETION OF THE WORK. NOTIFY GENERAL DYNAMIC OF FINDINGS WITHIN 24HRS. DO NOT PROCEED UNTIL UNSATISFACTORY CONDITIONS HAVE BEEN CORRECTED.

3.3 COORDINATION

A. GENERAL: SEQUENCE, COORDINATE AND INTEGRATE THE INSTALLATION OF ALL MATERIALS AND EQUIPMENT FOR EFFICIENT FLOW OF WORK, IN CONJUNCTION WITH THE OTHER TRADES. REVIEW THE DRAWINGS FOR WORK OF THE OTHER TRADES, AND REPORT AND RESOLVE ANY DISCOVERED DISCREPANCIES, PRIOR TO COMMENCING WORK.

B. COOPERATION: COOPERATE WITH THE OTHER CONTRACTORS AND INDIVIDUAL DISCIPLINES FOR PLACEMENT, ANCHORAGE, AND ACCOMPLISHMENT OF THE WORK. RESOLVE INTERFERENCE BETWEEN WORK OF OTHER DISCIPLINES OR CONTRACTORS PRIOR TO COMMENCING INSTALLATION.

C. SUPPORTS AND SLEEVES: COORDINATE THE INSTALLATION OF REQUIRED SUPPORTING DEVICES AND SLEEVES TO BE SET IN POURED–IN–PLACE CONCRETE AND OTHER STRUCTURAL COMPONENTS, AS THEY ARE CONSTRUCTED.

D. OBSTACLES AND INTERFERENCE: WHEN INSTALLING EQUIPMENT AND RACEWAYS, PROVIDE OFFSETS, FITTINGS, ACCESSORIES, AND CHANGES IN ELEVATION OR LOCATION AS NECESSARY TO AVOID OBSTACLES AND INTERFERENCE, PER ACTUAL FIELD CONDITIONS.

3.4 EQUIPMENT PROTECTION

A. PROTECT ALL EQUIPMENT, MATERIALS, AND WORK FROM THE WEATHER ELEMENTS, PAINT, MORTAR, CONSTRUCTION DEBRIS AND DAMAGE, UNTIL PROJECT IS SUBSTANTIALLY COMPLETE. REPAIR, REPLACE, CLEAN AND RETURN TO ORIGINAL CONDITION ALL DAMAGED AREAS, EQUIPMENT, UTILITIES, ETC., AND WORK SO AFFECTED.

3.5 LAYOUT

A. GENERAL: INSTALL MATERIALS AND EQUIPMENT LEVEL AND PLUMB, AND PARALLEL AND PERPENDICULAR TO OTHER BUILDING SYSTEMS AND COMPONENTS, WHERE INSTALLED EXPOSED.

B. SERVICEABILITY: INSTALL EQUIPMENT AND RACEWAYS, ETC. TO READILY FACILITATE SERVICING, MAINTENANCE, AND REPAIR OR REPLACEMENT OF COMPONENTS, AND SO AS TO MINIMIZE INTERFERENCE WITH OTHER EQUIPMENT AND INSTALLATIONS.

C. CLEARANCE: PRIOR TO COMMENCING WORK, VERIFY THAT ALL EQUIPMENT WILL ADEQUATELY FIT AND CONFORM TO THE INDICATED AND CODE REQUIRED CLEARANCES, IN THE SPACES INDICATED ON THE DRAWINGS. IF REARRANGEMENT IS REQUIRED, SUBMIT PLAN AND ELEVATION DRAWINGS OR SKETCHES INDICATING REARRANGEMENT, FOR THE ENGINEER'S APPROVAL. DO NOT REARRANGE WITHOUT EXPRESSED WRITTEN PERMISSION OF THE ENGINEER.

D. RIGHT–OF–WAY: WHEN LAYING OUT WORK, GIVE FIRST PRIORITY TO COMMUNICATIONS WIRING, AND NEXT PRIORITY TO STEAM AND CONDENSATE LINES, SANITARY LINES, DRAIN LINES, FIRE PROTECTION PIPING, AND SHEET METAL DUCT WORK. PROVIDE OFFSETS AS REQUIRED TO AVOID CONFLICTS. RESOLVE ALL CONFLICTS BEFORE COMMENCING INSTALLATION.

3.6 MOUNTING HEIGHTS

A. GENERAL: INDICATED HEIGHTS AREA MEASURED FROM THE CENTER OF THE DEVICE OUTLET BOX TO THE FINISHED FLOOR OR GRADE, UNLESS INDICATED OTHERWISE.

B. DEVICES: SWITCHES – 48" A.F.F. / RECEPTACLES – 18" A.F.F. / THERMOSTAT – 48" A.F.F.

3.7 HOLES SLEEVES AND OPENINGS

A. GENERAL: PROVIDE ALL HOLES, SLEEVES, AND OPENINGS REQUIRED FOR THE COMPLETION OF WORK AND RESTORE ALL DAMAGED SURFACES TO MATCH SURROUNDING SURFACES. MAINTAIN INTEGRITY OF ALL FIRE AND SMOKE RATED BARRIERS USING APPROVED FIRE STOPPING SYSTEMS. WHEN CUTTING HOLES OR OPENINGS, OR INSTALLING SLEEVES, DO NOT CUT, DAMAGE OR DISTURB STRUCTURAL ELEMENTS OR REINFORCING STEEL, UNLESS APPROVED IN WRITING BY THE PROJECT STRUCTURAL ENGINEER.

B. CONDUIT PENETRATIONS: SIZE CORE DRILLED HOLES SO THAT AN ANNULAR SPACE OF NOT LESS THAN 1/4" AND NOT MORE THAN 1" IS LEFT AROUND THE CONDUIT. WHEN OPENINGS ARE CUT IN LIEU OF CORE DRILLED, PROVIDE SLEEVE IN ROUGH OPENING. SIZE SLEEVES TO PROVIDE AN ANNULAR SPACE OF NOT LESS THAN 1/4" AND NOT MORE THAN 1" AROUND THE CONDUIT, PIPE, [redacted] SLEEVE TO MATCH SURROUNDING SURFACES.

3.8 RACEWAY SYSTEMS

A. UNLESS INDICATED OTHERWISE, USE RACEWAY TYPES AS FOLLOWS:

1. OUTDOORS, EXPOSED: RIGID GALVANIZED STEEL CONDUIT.

2. LIQUID TIGHT FLEXIBLE STEEL CONDUIT: USE WHERE FLEXIBLE STEEL CONDUIT CONNECTIONS ARE REQUIRED IN DRY, DAMP, WET, OR OILY LOCATIONS, FOR CONNECTIONS TO TRANSFORMERS, VIBRATING EQUIPMENT, EQUIPMENT REQUIRING MINOR ADJUSTMENTS IN POSITION, AND FOR FINAL CONNECTIONS TO ALL MOTORS AND SIMILAR EQUIPMENT.

B. RACEWAY ROUTING: AS REQUIRED BY JOB CONDITIONS UNLESS SPECIFIC ROUTES OR DIMENSIONED POSITIONS ARE INDICATED ON THE DRAWINGS. INSTALL TIGHT TO SLAB, BEAMS, AND JOISTS WHEREVER POSSIBLE. ROUTE EXPOSED CONDUIT, AND CONDUIT INSTALLED ABOVE CEILINGS, PARALLEL OR PERPENDICULAR TO WALLS, CEILINGS, AND STRUCTURAL MEMBERS. INSTALL TO MAINTAIN MINIMUM HEADROOM AND TO PRESENT A NEAT APPEARANCE. RUN PARALLEL RACEWAYS TOGETHER WITH BENDS MADE FROM THE SAME CENTERLINE. VERIFY EXACT LOCATIONS OF ALL RACEWAYS, PULL BOXES, AND JUNCTION BOXES. RESOLVE ANY CONFLICTS BEFORE INSTALLATION. DO NOT INSTALL HORIZONTAL CONDUIT RUNS BELOW 7'–6" A.F.F. IN EXPOSED LOCATIONS.

1. DO NOT ROUTE ANY CONDUITS INTO OR THRU, STAIRWAYS, ELEVATOR SHAFTS OR ELEVATOR MACHINE ROOM.
2. CONCEAL CONDUITS ABOVE SUSPENDED CEILINGS WHERE POSSIBLE.
3. COORDINATE ALL CONDUIT STUB UPS WITH ROOF TOP EQUIPMENT LAYOUT.
4. COORDINATE INSTALLATIONS OF CONDUITS, EQUIPMENT, ETC. WITH BUILDING OWNER PRIOR TO COMMENCEMENT OF WORK.

C. RACEWAY INSTALLATION: CUT CONDUIT ENDS SQUARE USING SAW OR PIPE CUTTER AND REAM EACH CUT END SMOOTH. CAREFULLY MAKE ALL CONDUIT BENDS AND OFFSETS SO THAT THE INSIDE DIAMETER OF PIPE IS NOT REDUCED. MAKE BENDS SO THAT LEGS ARE IN THE SAME PLANE. MAKE OFFSETS SO THAT LEGS ARE IN THE SAME PLANE AND PARALLEL PROTECT STUB–UPS FROM DAMAGE, AND CAREFULLY RE–BEND WHEN NECESSARY.

D. FITTINGS: MAKE UP ALL RACEWAY FITTINGS TIGHT SO THAT FINAL INSTALLATION OF RACEWAY, FITTING AND ENCLOSURES CONSTITUTES, A FIRM AND MECHANICAL ASSEMBLY AND A CONTINUOUS ELECTRICAL CONTINUITY. PROVIDE INSULATING BUSHINGS ON CONDUIT TERMINATIONS.

E. PROTECTION: PROTECT ALL RACEWAYS, ENCLOSURES AND EQUIPMENT DURING CONSTRUCTION TO PREVENT ENTRY OF CONCRETE, DEBRIS AND OTHER FOREIGN MATTER. FREE CLOGGED CONDUITS OF ALL OBSTRUCTIONS, OR REPLACE PRIOR TO PULLING WIRE.

F. INSTALL ALL OUTLET PULL AND JUNCTION BOXES RIGIDLY, PLUMB AND LEVEL. SUPPORT AND SECURE BOXES INDEPENDENTLY FROM CONDUITS TERMINATING AT BOX. INSTALL ALL BOXES SO AS TO BE ACCESSIBLE AND SO THAT COVERS MAY BE EASILY REMOVED.

G. PROVIDE CAP TO PREVENT ENTRY OF MATERIALS AND MOISTURE FOR ALL SPARE CONDUITS.

H. CONDUIT SEALS: INSTALL CONDUIT SEAL FOR EACH CONDUIT PENETRATING AT AN EXTERIOR BUILDING WALL, BELOW GRADE (UNLESS PENETRATION IS BELOW LOWEST BUILDING FLOOR SLAB), AND ELSEWHERE AS INDICATED, AND SO AS TO ACHIEVE A SEALED WATERTIGHT INSTALLATION.

3.9 CONDUCTORS – 600 VOLT AND BELOW

A. MINIMUM CONDUCTOR SIZE: ALL BRANCH CIRCUIT WIRING SHALL BE MINIMUM #12 AWG. FEEDER CIRCUIT WIRING SHALL BE MINIMUM #2 AWG UNLESS OTHERWISE NOTED. ALL CONTROL CIRCUIT WIRE SHALL BE MINIMUM #14 AWG, UNLESS INDICATED OTHERWISE. PROVIDE LARGER SIZES, AS INDICATED OR REQUIRED. A FULL SIZED EQUIPMENT GROUNDING CONDUCTOR WILL BE INSTALLED IN POWER AND LIGHTING CONDUITS, (CONDUITS WILL NOT BE USED AS A GROUNDING CONDUIT).

B. IN RACEWAY: INSTALL WIRING IN CONDUIT OR OTHER SPECIFIED RACEWAY, UNLESS INDICATED OTHERWISE. ROMEX, BX, AC AND MC TYPE CABLES ARE NOT ALLOWED.

C. TERMINATIONS: FURNISH AND INSTALL TERMINATIONS INCLUDING LUGS IF NECESSARY TO MAKE ALL ELECTRICAL CONNECTIONS INDICATED OR REQUIRED. EXTERIOR AND SWITCH GEAR TERMINATIONS SHALL HAVE AN ANTIOXIDANT APPLIED. SPRING TYPE WIRE CONNECTORS USED IN EXTERIOR BOXES SHALL BE SILICONE FILLED.

3.10 HANGERS AND SUPPORTS

A. GENERAL: RIGIDLY SUPPORT AND SECURE ALL MATERIALS, RACEWAY AND EQUIPMENT TO BUILDING STRUCTURE USING HANGERS, SUPPORTS AND FASTENERS SUITABLE FOR THE USE, MATERIALS AND LOADS ENCOUNTERED, PROVIDE ALL NECESSARY HARDWARE. PROVIDE CONDUIT SUPPORTS AT MAXIMUM 5 FEET ON CENTER OR PER NEC CODE REQUIREMENTS.

3.10 HANGERS AND SUPPORTS (CONTINUE)

B. OVERHEAD MOUNTING: ATTACH OVERHEAD MOUNTED EQUIPMENT TO STRUCTURAL FRAMEWORK OR SUPPORTING METAL FRAMEWORK. DO NOT MAKE ATTACHMENTS TO STEEL ROOFING, STEEL FLOORING OR CEILING MINERAL TILE.

C. WALL MOUNTING: SUPPORT WALL MOUNTED EQUIPMENT BY MASONRY, CONCRETE BLOCK, METAL FRAMING OR SUB–FRAMING.

D. EXTERIOR WALLS: MOUNT ALL EQUIPMENT LOCATED ON THE EXTERIOR BUILDING WALLS, AT LEAST ONE INCH AWAY FROM WALL SURFACE, USING SUITABLE SPACERS.

E. STRUCTURAL MEMBERS: DO NOT CUT, DRILL OR WELD ANY STRUCTURAL MEMBER EXCEPT AS SPECIFICALLY APPROVED BY THE ENGINEER.

F. INDEPENDENT SUPPORT: DO NOT SUPPORT MATERIALS OR EQUIPMENT FROM OTHER EQUIPMENT, PIPING, DUCTWORK, OR SUPPORTS FOR SAME.

G. TEMPORARY CONDITIONS: DO NOT ATTACH TO OR SUPPORT ELECTRICAL WORK FROM REMOVABLE OR KNOCKOUT PANELS OR TEMPORARY WALLS OR PARTITIONS.

H. RACEWAY SUPPORTS: RIGIDLY SUPPORT ALL RACEWAY WITH MAXIMUM SPACING PER NEC, AND SO AS TO PREVENT DISTORTION OF ALIGNMENT DURING PULLING OPERATION. USE APPROVED HANGERS, CLAMPS, AND STRAPS FOR INDIVIDUAL RUNS. DO NOT USE PERFORATED STRAPS OR TIE WIRES. WHERE MULTIPLE PARALLEL RACEWAYS ARE RUN TOGETHER, USE TRAPEZE TYPE HANGER ARRANGEMENT MADE FROM U–CHANNEL AND ACCESSORIES, SUSPENDED BY THREADED RODS, AND ALLOT AT LEAST 25% SPARE CAPACITY FOR FUTURE INSTALLATION OF ADDITIONAL RACEWAYS. RIGIDLY ANCHOR VERTICAL CONDUITS SERVING FLOOR–MOUNTED OR "ISLAND" TYPE EQUIPMENT MOUNTED AWAY FROM WALL WITH METAL BRACKET OR RIGID STEEL CONDUIT EXTENSION SECURED TO FLOOR.

I. MISCELLANEOUS SUPPORTS: PROVIDE ANY ADDITIONAL STRUCTURAL SUPPORT STEEL BRACKETS, ANGLES, FASTENERS AND HARDWARE AS REQUIRED TO ADEQUATELY SUPPORT ALL ELECTRICAL MATERIALS AND EQUIPMENT.

J. ONE HOLE STRAPS SHALL NOT BE USED FOR CONDUITS LARGER THAN 3/4 INCH.

K. NEW HANGERS AND SUPPORT SYSTEMS SHALL MEET NPC4 PERFORMANCE RATINGS FOR SEISMIC BRACING.

3.11 EQUIPMENT CONNECTIONS

A. VERIFICATION: OBTAIN AND REVIEW SHOP DRAWINGS, PRODUCT DATA AND MANUFACTURER'S INSTRUCTIONS FOR EQUIPMENT FURNISHED BY OTHERS. EXAMINE ACTUAL EQUIPMENT TO VERIFY PROPER CONNECTION LOCATIONS AND REQUIREMENTS.

B. ROUGH–IN: PROVIDE ALL REQUIRED CONDUIT, BOXES, FITTINGS, WIRES, CONNECTORS, AND MISCELLANEOUS ACCESSORIES, ETC., AS NECESSARY TO ROUGH IN THE MAKE FINAL CONNECTIONS TO ALL EQUIPMENT REQUIRING ELECTRICAL CONNECTIONS. IN GENERAL, MOTORS AND EQUIPMENT SHALL BE WIRED IN CONDUIT TO A JUNCTION BOX (OR SAFETY SWITCH) NEAR THE UNIT, AND FROM THERE TO THE UNIT IN FLEXIBLE METAL OR LIQUID TIGHT FLEXIBLE STEEL CONDUIT.

C. CONNECTIONS: PROVIDE PROPERLY SIZED OVERLOAD AND SHORT CIRCUIT PROTECTION FOR ALL EQUIPMENT CONNECTED, WHETHER FURNISHED UNDER THIS CONTRACT OR BY OTHERS. VERIFY PRIOR CONNECTIONS WITH MANUFACTURER'S PUBLISHED DIAGRAMS AND COMPLY WITH SAME. VERIFY THAT EQUIPMENT IS READY FOR ELECTRICAL CONNECTIONS, WIRING AND ENERGIZATION, PRIOR TO PERFORMING SAME.

D. CONTROL WIRING: PROVIDE ALL CONTROL WIRING TO REMOTE DEVICES OR EQUIPMENT, AS INDICATED OR REQUIRED. MODIFY EQUIPMENT CONTROL WIRING, INSTALL OR DISCONNECT JUMPERS, ETC., AS REQUIRED.

3.12 IDENTIFICATION

A. GENERAL: LOCATE NAME PLATE MARKING, OR OTHER IDENTIFICATION MEANS ON OUTSIDE OF EQUIPMENT OR BOX FRONT COVERS WHEN ABOVE CEILINGS AND WHEN IN MECHANICAL OR ELECTRICAL EQUIPMENT ROOMS OR OTHER UNFINISHED AREAS, AND ON INSIDE OF FRONT COVER WHEN IN FINISHED ROOMS/ AREAS. USE CONTRACT DOCUMENT DESIGNATIONS FOR IDENTIFICATION UNLESS OTHERWISE NOTED.

B. NAMEPLATES: PROVIDE NAME PLATE ENGRAVED WITH EQUIPMENT DESIGNATION FOR EACH SAFETY SWITCH, PANEL BOARD, TRANSFORMER, MOTOR STARTER, AND ALL OTHER EQUIPMENT, ETC. USING LAMINATED PLASTIC WITH WHITE BACK GROUND & BLACK LETTERING.

C. UNDERGROUND WARNING TAPE: DURING TRENCH BACK FILLING FOR EACH UNDERGROUND ELECTRICAL, TELEPHONE, SIGNAL AND COMMUNICATIONS LINE, PROVIDE A CONTINUOUS UNDERGROUND WARNING TAPE LOCATED DIRECTLY ABOVE LINE, AT TWELVE INCHES BELOW FINISHED GRADE.

D. MARK EACH JUNCTION AND PULL BOX INDICATING SOURCE DESIGNATION AND CIRCUIT NUMBER(S) FOR THE ENCLOSED CONDUCTORS USING LAMINATED PLASTIC WITH WHITE BACK GROUND & BLACK LETTERING.

E. ALL CONDUITS SHALL BE TAGGED/IDENTIFIED INSIDE ALL PULL BOXES, J–BOXES, AND CABINETS WITH P–TOUCH TYPE PRINTED LABELS. (1/2" LABEL, WHITE FACE WITH BLACK LETTERING.)

F. LOAD CENTER CIRCUIT DIRECTORIES: AT COMPLETION OF PROJECT, ACCURATELY COMPLETE EACH PANEL BOARD CIRCUIT DIRECTORY CARD, IDENTIFYING LOAD SERVED, "SPARE" OR "SPACE" FOR EACH CIRCUIT POLE. WHEN MODIFYING, ADDING, OR DELETING CIRCUITS AT AN EXISTING PANEL BOARD, UPDATE THE EXISTING (OR PROVIDE NEW) CIRCUIT DIRECTORY CARD TO ACCURATELY REFLECT FINAL CONDITIONS.

LA-RICS
Los Angeles Regional Interoperable Communications System

[redacted]

GENERAL NOTES
GN5

[redacted]

NOTE: ALL INFORMATION IS SUBJECT TO FIELD VERIFICATION. ALL INFORMATION IS CONFIDENTIAL AND NOT FOR PUBLIC DISTRIBUTION WITHOUT EXPRESS CONSENT OF THE LOS ANGELES REGIONAL INTEROPERABLE COMMUNICATIONS SYSTEMS AUTHORITY.

3.13 CHECKOUT, TESTING AND ADJUSTING

A. POWER CONDUCTORS: CONTRACTOR SHALL CONDUCT A CONTINUITY & INSULATION TEST ON CONDUCTORS BETWEEN SERVICE DISCONNECT SWITCH & POWER CABINET.

B. GROUNDING – CLAMP–ON RESISTANCE OR INDUCED FREQUENCY TESTS WITH CLAMP–ON GROUND RESISTANCE TESTER (PER MOTOROLA R56 SPECIFICATIONS)

3.14 SYSTEM DEMONSTRATION

A. INSTRUCT MOTOROLA REPRESENTATIVES IN THE STARTUP, OPERATION AND MAINTENANCE OF ALL ELECTRICAL SYSTEMS AND EQUIPMENT AS REQUESTED BY [redacted]

3.15 CLEANING AND TOUCH –UP PAINTING

A. GENERAL: PERIODICALLY REMOVE FROM THE PROJECT SITE, ALL WASTE, RUBBISH AND CONSTRUCTION DEBRIS ACCUMULATED FROM CONSTRUCTION OPERATIONS. THE PREMISES SHALL BE LEFT FREE OF ANY DEBRIS AND UNUSED CONSTRUCTION MATERIALS PRIOR TO FINAL ACCEPTANCE.

B. ELECTRICAL EQUIPMENT: REMOVE ALL DUST, DIRT, DEBRIS, MORTAR, WIRE SCRAPS, RUST, AND OTHER FOREIGN MATERIALS FROM THE INTERIOR AND EXTERIOR OR ALL ELECTRICAL EQUIPMENT AND ENCLOSURES, AND WIPE DOWN. CLEAN ACCESSIBLE CURRENT CARRYING ELEMENTS AND INSULATORS PRIOR TO ENERGIZING.

C. TOUCH–UP PAINTING: RESTORE AND REFINISH TO ORIGINAL CONDITION ALL SURFACES OR ELECTRICAL EQUIPMENT THAT IS SCRATCHED, MARRED AND/OR DENTED DURING SHIPPING, HANDLING, OR INSTALLATION. REMOVE ALL RUST, AND PRIME AND PAINT AS RECOMMENDED BY MANUFACTURER.

3.16 COAXIAL CABLE INSTALLATION

A. THE COAXIAL CABLE SIZE SHALL BE AS SHOWN ON DRAWINGS. (REFERENCE PAGE A5)

B. COAXIAL CABLE SUPPORTS

1. SUPPORT COAXIAL CABLES INSIDE MONOPOLES WITH "KELLEM" GRIP TYPE PRODUCTS.

2. SECURE AND SUPPORT COAXIAL CABLES ON OPEN WAVEGUIDES SLOTS/LOCATIONS FOR SELF SUPPORT TOWERS.

3. SECURE AND SUPPORT COAXIAL CABLES ON ICE BRIDGES AS INDICATED ON DRAWINGS.

C. COAXIAL CABLE GROUNDING

1. THE COAXIAL CABLES SHALL BE GROUNDED TO TOWER STEEL OR GROUND BAR AT THE ANTENNAS USING THE GROUNDING KITS AS SPECIFIED ON THE DRAWINGS.

2. THE COAXIAL CABLES SHALL BE GROUNDED TO A GROUND BAR AT THE BOTTOM OF THE TOWER OR MONOPOLE USING THE KITS SPECIFIED ON THE DRAWINGS.

3. THE COAXIAL CABLES SHALL BE GROUNDED TO A GROUND BAR AT THE BULKHEADS USING THE GROUNDING KITS AS SPECIFIED ON THE DRAWINGS.

4. THE COAXIAL CABLES SHALL BE GROUNDED ON ALL TOWERS AT A MINIMUM OF EVERY 200' UP THE TOWER.

3.17 TELEPHONE SERVICE

A. LA–RICS WILL ORDER AND INSTALL THE T–1 SERVICE.

3.18 ELECTRICAL SERVICE

A. GENERAL: ARRANGE WITH THE UTILITY COMPANY AND LA–RICS FOR A TIMELY INSTALLATION OF THE TEMPORARY ELECTRIC SERVICE (IF REQUIRED) AND PERMANENT ELECTRIC SERVICES. COMPLY WITH AND COORDINATE ALL REQUIREMENTS OF THE UTILITY COMPANY.

B. CONTRACTOR WILL COORDINATE WITH ELECTRICAL UTILITY SERVICE PROVIDER FOR ALL INSPECTIONS AND METER SET.

C. ARRANGE FOR AN INSPECTION OF THE ELECTRICAL SERVICE BY THE AUTHORITY HAVING JURISDICTION. OBTAIN A CERTIFICATE OF INSPECTION IF POSSIBLE FROM THE JURISDICTION. FURNISH A COPY OF THE CERTIFICATE TO GENERAL DYNAMICS / MOTOROLA WITH THE HANDOFF PACKAGE AND A COPY TO THE UTILITY COMPANY.

E. COORDINATE METER SOCKET REQUIREMENTS WITH THE ELECTRIC UTILITY AS REQUIRED

F. GROUNDING: PROVIDE GROUNDING ELECTRODE SYSTEM FOR THE SERVICE, PER THE NEC, PER UTILITY COMPANY REQUIREMENTS, AND AS INDICATED.

G. SHORT CIRCUIT RATINGS: PROVIDE EQUIPMENT WITH HIGHER FAULT CURRENT RATINGS AS NEEDED TO MATCH UTILITY COMPANY AVAILABLE FAULT CURRENT.

ART 4 – TESTING

4.1 PRELIMINARY INSPECTION

A. PRIOR TO TESTING, CONTRACTOR WILL PERFORM INSPECTION OF ANTENNA AND COAXIAL SYSTEM AND RECORD FINDINGS ON "ANTENNA INSPECTION FORM". ALL ITEMS SHOULD BE LISTED AS COMPLETE ON THIS FORM PRIOR TO ANTENNA SYSTEM TESTING.

4.2 EQUIPMENT

A. ALL TEST EQUIPMENT SHALL BE CALIBRATED PER MANUFACTURER SPECS. CALIBRATION CERTIFICATES WILL BE PROVIDED TO GENERAL DYNAMICS / MOTOROLA. THIS SHALL INCLUDE BUT NOT LIMITED TO COAX SWEEPS AND GROUNDING.

4.3 PARAMETERS

A. ALL COAXIAL ANTENNA SYSTEMS TO MEET MOTOROLA SWEEP TEST PROCEDURES.

4.4 NOTIFICATION

A. CONTRACTOR SHALL NOTIFY MOTOROLA & GENERAL DYNAMICS DESIGNATED REPRESENTATIVE A MINIMUM OF 24 HOURS PRIOR TO ANTENNA SYSTEMS TESTING.

4.5 AZIMUTH VERIFICATION

A. PRIOR TO TESTING, CONTRACTOR SHALL VERIFY THAT ALL AZIMUTHS AND DOWN TILTS ARE TRUE. CONTRACTOR SHALL ENSURE THAT ALL CONNECTORS HAVE BEEN INSTALLED TO THE SPECIFIED TORQUE VALUES (IF APPLICABLE).

4.6 DELIVERY

A. CONTRACTOR SHALL ISSUE 3 HARD AND 1 SOFT PACKAGES TO THE GDIT DESIGNATED REPRESENTATIVE AND LEAVE 1 COPY INSIDE THE SHELTER AFTER SITE HAS BEEN ACCEPTED. MUST BE COMPLETED WITHIN 5 DAYS.

PART 5 – COLOR CODES:

A. REFER TO PAGE A5, DETAIL 01 FOR COLOR CODE TABLE

B. LAMINATED PLASTIC TAGS REQUIREMENTS:

1. WHITE BACKGROUND WITH BLACK LETTERING
2. SECURE TAGS WITH STAINLESS STEEL TIES
3. TAGS SHALL BE STAMPED ON ONE SIDE ONLY
4. TAGS STAMPING SHALL BE WITH TEXT HEIGHT OF 5/16" OR LARGER
5. TAGS TO BE LOCATED WITHIN 12" OF MAIN COAX TO ANTENNA JUMPER CONNECTION AND INSIDE SHELTER ENTRY PORT.

LA-RICS
Los Angeles Regional Interoperable Communications System

[redacted]

[redacted]

GENERAL NOTES
GN6

[redacted]

NOTE: ALL INFORMATION IS SUBJECT TO FIELD VERIFICATION. ALL INFORMATION IS CONFIDENTIAL AND NOT FOR PUBLIC DISTRIBUTION WITHOUT EXPRESS CONSENT OF THE LOS ANGELES REGIONAL INTEROPERABLE COMMUNICATIONS SYSTEMS AUTHORITY.

PART 6 – CONTRACTOR DELIVERABLES

A. THE CONTRACTOR SHALL CARRY ON HIS WORK IN ACCORDANCE WITH ALL GOVERNING NATIONAL, STATE, COUNTY AND LOCAL CODES, AS WELL AS, OSHA REGULATIONS.

B. TESTING OF CAST–IN–PLACE CONCRETE, STRUCTURAL, STEEL AND ANY OTHER MATERIAL USED SHALL BE AS REQUIRED BY AND IN ACCORDANCE WITH LOCAL REGULATIONS.

C. THE GROUNDING SYSTEM FOR EACH SITE SHALL BE TESTED FOR A GROUND RESISTANCE OF 5 OHMS. ONE OF THE THREE TESTS SHALL BE USED: IEEE FALL – OF – POTENTIAL TEST. AN APPROVED CLAMP ON TEST, OR A DIRECT METHOD (TWO–TERMINAL) "CONTINUITY" TEST. THE FALL – OF – POTENTIAL TEST IS THE PREFERRED TESTING METHOD AND SHALL BE USED WHENEVER POSSIBLE. ANY GROUND RESISTANCE OF GREATER THAN 5 OHMS BUT LESS THAN 25 OHMS SHALL BE REVIEWED BY LA–RICS AUTHORITY AND AGREED UPON WITH MOTOROLA AND GENERAL DYNAMICS ON A CASE–BY–CASE BASIS.

D. THE CONTRACTOR SHALL SUBMIT AN ANTENNA SWEEP TEST INCLUDING THREE (3) HARD COPIES OF ALL SWEEP GRAPHICS AND SITE SUBMISSION FORMS AND ONE (1) SOFT COPY (DATABASE FILE) THE SOFT COPY SHALL BE CONTAINED ON A CD/DVD. THE FILE SHALL BE NAMED USING THE SITE NUMBER AND THE THREE LETTER EXTENSION OF THE ELECTRONIC FILE. ANTENNA SWEEPS SUPPLIED BY MFGR.–SWEEP TEST RESULTS THAT INCLUDE:

1. INSERTION LOSS SWEEP
2. LINE LENGTH SWEEP
3. RETURN LOSS OF LINE SWEEP
4. ANTENNA RETURN LOSS SWEEP
5. RETURN LOSS SYSTEM SWEEP (THROUGH ANTENNA)
6. DTF SWEEP THROUGH THE SYSTEM INCLUDING ANTENNA

E. AS–BUILT INFORMATION: TWO (2) COPIES OF A REPORT CONTAINING A DESCRIPTION OF THE TOWER/ MONOPOLE, SKETCHES AND RED–LINED CONSTRUCTION DRAWINGS SHALL BE SUBMITTED. THE MAXIMUM SIZE OF ANY DRAWING IN THE REPORT SHALL BE 11"x17". THE COVER SHEET OF THE REPORT SHALL CONTAIN THE SITE NAME AND SITE NUMBER. ALSO INCLUDED IN THIS REPORT SHALL BE RED–LINED RF INFORMATION.

F. CONTRACTOR SHALL HAVE 72 HOURS TO COMPLETE PUNCH–LIST ITEMS FOUND INCOMPLETE OR INADEQUATE BY LA–RICS AUTHORITY DURING SITE COMPLETION WALK AND IN TURN TO GENERAL DYNAMICS.

G. ONE ORIGINAL OF EACH OF THE FOLLOWING SHALL BE PROVIDED TO GENERAL DYNAMICS UPON COMPLETION OF THE PROJECT:

1. CERTIFICATE OF OCCUPANCY OR COMPLETION FROM JURISDICTION (IF AVAILABLE)
2. ALL INSPECTIONS SIGN OFFS
3. BUILDING AND ELECTRICAL PERMITS
4. RELEASE OF WAIVERS & LIENS
5. ANTENNA PACKETS (EQUIPMENT INFORMATION, PAPERS, ETC)
6. WARRANTIES
7. SITE CHECKLIST PUNCH LIST COMPLETION AND SIGNED
8. ANTENNA STRUCTURE SUPPORT SPECIFICATIONS.
9. ANTENNA STRUCTURE REGISTRATION.
10. ANTENNA SPECIFICATIONS, COAX TESTING REPORT. RETURN LOSS SHEET
11. COMPACTION TEST REPORT
12. CONCRETE PLACEMENT REPORT
13. ANTENNA DIAGRAMS/MOUNTING DETAILS.
14. EQUIP/CABLE LABELING.
15. SITE SPECIFIC ACCEPTANCE TEST RESULTS.
16. SITE FINAL PHOTOS (BEFORE AND AFTER).
17. SITE CONSTRUCTION PHOTOS (PER CHECKLIST REQUIREMENT)
18. ALL SITE FINAL INSPECTION – BUILDING, ELECTRICAL, ETC.
19. GROUND RESULT REPORT (BEFORE ELECTRICAL NEUTRAL ATTACHMENT & AFTER NEUTRAL ATTACHMENT) – 5 OHMS OR LESS
20. AS–BUILT DRAWINGS.
21. MILL CERTS FOR ALL STEEL
22. ANTENNA HEIGHT CERTIFICATION REPORT
23. ANTENNA AZIMUTH DATA. (PER DETERMINED METHOD)
24. RET TILT INFORMATION AS CLARIFIED BY GDIT/MOTOROLA SCREENSHOTS W/ NAMING TO BE PROVIDED PER MOTOROLA SPECS.

H. ALL PERMITS ARE TO BE ON–SITE AT ALL TIMES, INCLUDING DURING AND AFTER CONSTRUCTION.

ABBREVIATIONS & LEGEND

A/C	AIR CONDITIONING
ADJ.	ADJUSTABLE
AFF	ABOVE FINISH FLOOR
APPROX.	APPROXIMATELY
ASTM	AMERICAN SOCIETY FOR TESTING AND MATERIALS
AWG	AMERICAN WIRE GAUGE
BLDG.	BUILDING
BLK.	BLOCK
BMR	BASE MOBILE RADIO
B/S	BUILDING STANDARD
CLG	CEILING
CLR.	CLEAR
CONC.	CONCRETE
CONST.	CONSTRUCTION
CONT.	CONTINUOUS
DBL.	DOUBLE
DIA., ø	DIAMETER
DIAG.	DIAGONAL
DIM.	DIMENSION
DN	DOWN
DTL, DETL	DETAIL
DWG.	DRAWING
E	EAST
EA.	EACH
EL, ELEV	ELEVATION
ELECT	ELECTRICAL
EQ.	EQUAL
EQUIP.	EQUIPMENT
E.W.	EACH WAY
EXIST.	EXISTING
EXT	EXTERIOR
(E)	EXISTING
FIN.	FINISH
FLUOR.	FLUORESCENT
FLR	FLOOR
FT.	FOOT
FG	FINISH GRADE
FS	FINISH SURFACE
GA.	GAUGE
GALV	GALVANIZE(D)
CONTRACTOR	GENERAL CONTRACTOR
GND, GRND	GROUND
GWB	GYPSUM WALL BOARD
GYP. BD.	GYPSUM BOARD
HARD'WD	HARDWOOD
HORIZ.	HORIZONTAL
HR	HOUR
HT.	HEIGHT
HVAC	HEATING, VENTING AND AIR CONDITIONING
I.D.	INSIDE DIA.
IN.	INCH
INFO	INFORMATION
INSUL.	INSULATION
INT.	INTERIOR
LB(S)	POUND(S)
MAX	MAXIMUM
MECH	MECHANICAL
MET, MTL	METAL
MFR.	MANUFACTURER
MGR	MANAGER
MIN	MINIMUM
MISC	MISCELLANEOUS
N	NORTH
NA	NOT APPLICABLE
NG	GROUND SPOT ELEVATION
NIC	NOT IN CONTRACT
NTS	NOT TO SCALE
(N)	NEW
OC, o/c	ON CENTER
OD	OUTSIDE DIAMETER
OPG.	OPENING
OPP	OPPOSITE
(P)	PROPOSED
PLYWD.	PLYWOOD
PR	PAIR
PROJ	PROJECT
PROP	PROPERTY
PT	PRESSURE TREATED
REQ'D	REQUIRED
RM	ROOM
R.O.	ROUGH OPENING
S	SOUTH
SHT	SHEET
SIM.	SIMILAR
SPEC.	SPECIFICATION
SQ	SQUARE
SS	STAINLESS STEEL
STL.	STEEL
STRUCT.	STRUCTURAL
SUSP.	SUSPENDED
S.V.	SHEET VINYL
THRU	THROUGH
TNND	TINNED
T.O.C.	TOP OF CURB
T.O.M.	TOP OF MASONRY
TYP	TYPICAL
TOW	TOP OF WALL
UBC	UNIFORM BUILDING CODE
UNO	UNLESS NOTED OTHERWISE
VERT.	VERTICAL
VIF	VERIFY IN FIELD
VT	VINYL TILE
W	WEST
W/	WITH
WIN	WINDOW
W/O	WITHOUT
W.P.	WATERPROOF
∡	ANGLE
&	AND
℄	CENTER LINE
ℙ	PROPERTY LINE
@	AT
#	NUMBER

1 REVISION	100 ROOM NUMBER	01 D–501 SECTION REFERENCE
1 KEY NOTES	1 KEYED NOTES	12.14°E MAGNETIC NORTH — MAGNETIC NORTH ARROW
01 D–501 DETAIL REFERENCE	01 D–501 ELEVATION REFERENCE	
SECTION REFERENCE	DESCRIPTION – – ELEVATION	
LAT/LONG COORDINATES	NG 1234.5 ELEVATION POINT	

LA-RICS
Los Angeles Regional Interoperable Communications System

[redacted]

GENERAL NOTES
GN7

[redacted]

NOTE: ALL INFORMATION IS SUBJECT TO FIELD VERIFICATION. ALL INFORMATION IS CONFIDENTIAL AND NOT FOR PUBLIC DISTRIBUTION WITHOUT EXPRESS CONSENT OF THE LOS ANGELES REGIONAL INTEROPERABLE COMMUNICATIONS SYSTEMS AUTHORITY.

[redacted]

OWNER'S NAME: [redacted]

ASSESSOR'S PARCEL NUMBER(S) [redacted]

BASIS OF BEARINGS: (NAD 83; Epoch 2010)

THE BEARINGS SHOWN HEREON ARE BASED ON CALIFORNIA STATE PLANE COORDINATE SYSTEM – ZONE 5. AS DETERMINED BY G.P.S. OBSERVATIONS, USING TRIMBLE 5700/5800 RECEIVERS AND TRIMBLE GEODETIC OFFICE 1.60 SOFTWARE.

BASIS OF ELEVATIONS: (NAVD 1988)

ELEVATIONS ARE BASED ON GPS OBSERVATIONS FROM TWO NATIONAL GEODETIC SURVEY C.O.R.S. REFERENCE STATIONS: 1) JPLM, ELEVATION = 1503.49' AND 2) TORP, ELEVATION = 103.77' WITH GEOID 2012 CORRECTIONS APPLIED.

SITE DATA

[redacted]

FEMA FLOOD ZONE INFORMATION

TITLE REPORT NOTES

(WAITING FOR TITLE)

PROPERTY LEGAL DESCRIPTION

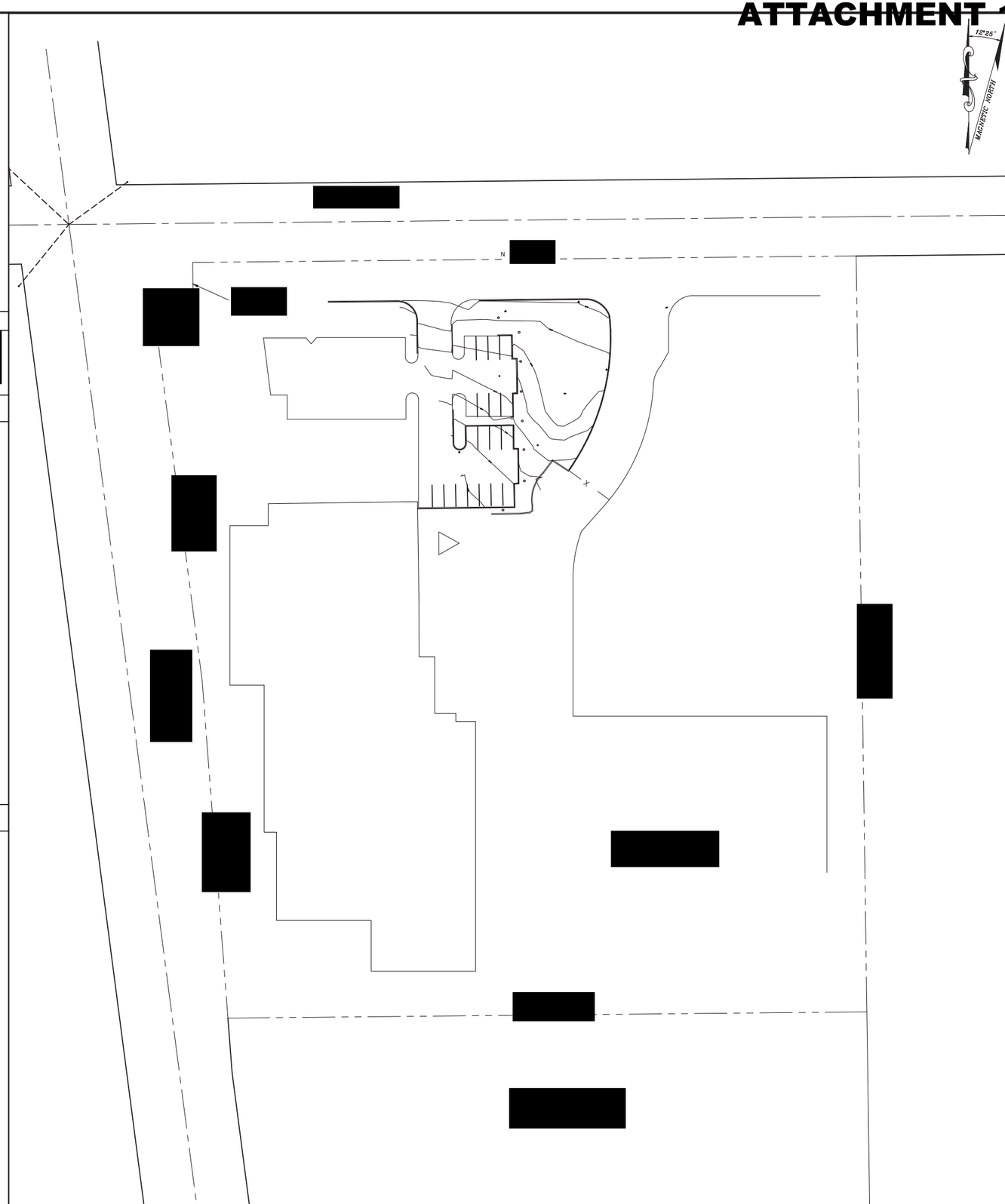

OVERALL SITE PLAN

SCALE: 1"=40'

40 20 0 40

[redacted]

VICINITY MAP

LEGEND

These standard symbols will be found in the drawing.

- LIGHT POLE
- FOUND MONUMENT
- STORM DRAIN INLET
- STORM DRAIN MANHOLE
- TREE DECIDUOUS
- UTILITY POLE

BC	BOTTOM OF CURB
CONC	CONCRETE SURFACE
EC	EDGE OF CONCRETE
ELCB	ELECTRICAL CABINET
ELTR	ELECTRICAL TRANSFORMER
LP	LIGHT POLE TOP
PS	PAINT STRIPING
RTOP	ROOF TOP
SDINL	STORM DRAIN INLET
TC	TOP OF CURB
TOWER	TOWER TOP
TW	WALL TOP

- BOUNDARY LINE
- CENTER LINE
- MISC. PROPERTY LINE
- MISC. TIE LINE
- RIGHT–OF–WAY LINE
- EASEMENT LINE
- X FENCE LINE

LEGEND

1) This is not a boundary survey. This is a specialized topographic map. The property lines and easements shown hereon are from record information as noted hereon. Floyd Surveying translated the topographic survey to record information using the two found monuments shown hereon. No title research was performed by Floyd Surveying.

2) Any changes made to the information on this plan, without the written consent of Floyd Surveying relieves Floyd Surveying of any and all liability.

3) These drawings & specifications are the property & copyright of Floyd Surveying & shall not be used on any other work except by agreement with the Surveyor. Written dimensions shall take preference over scaled & shall be verified on the job site. Any discrepancy shall be brought to the notice of the Surveyor prior to commencement of any work.

4) Field survey completed on MAY 5, 2014.

GENERAL NOTES

LA-RICS

Los Angeles Regional Interoperable Communications System

[redacted]

TOPOGRAPHIC SURVEY

LS1

[redacted]

[redacted]

LA-RICS
Los Angeles Regional Interoperable Communications System

[redacted]

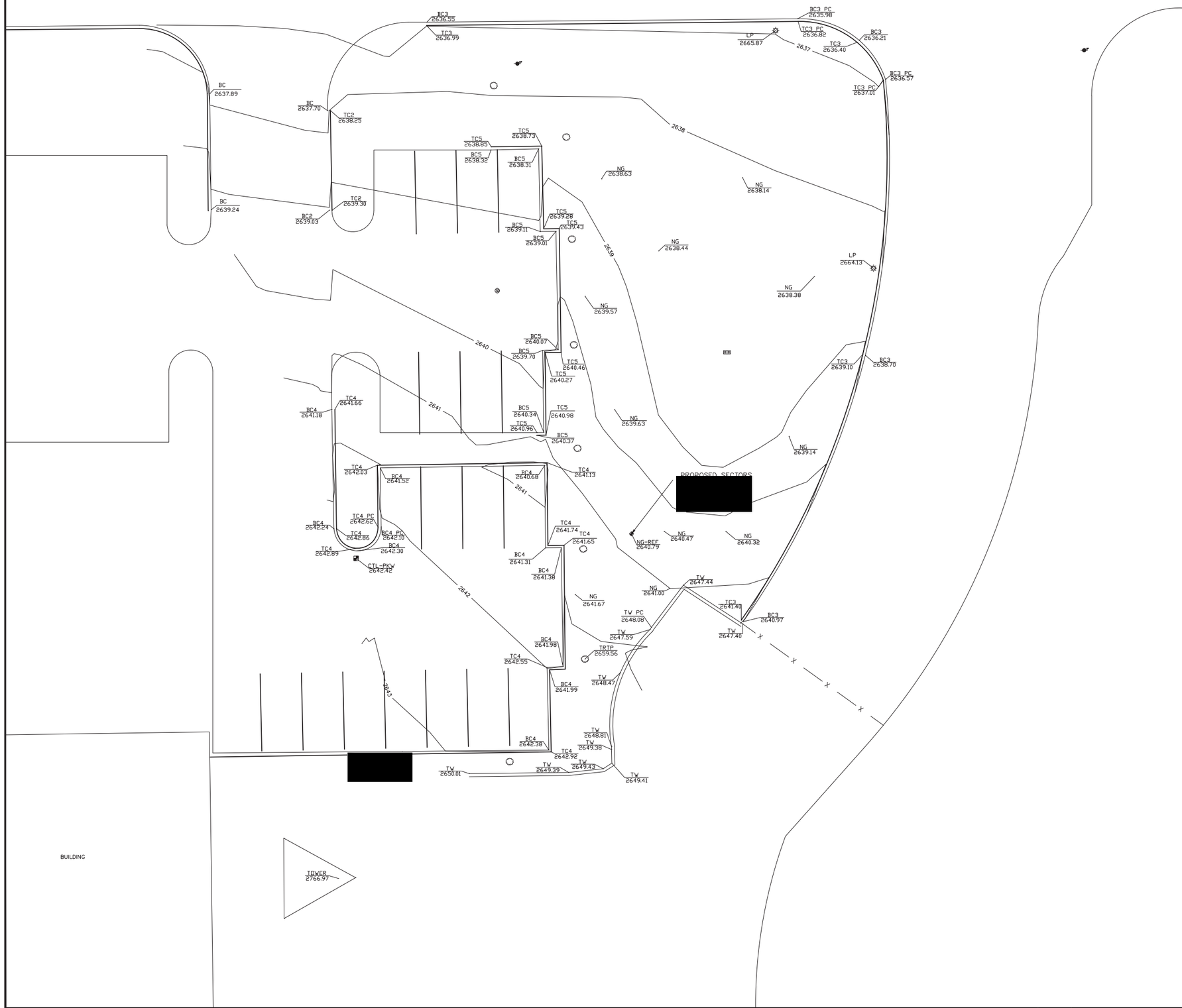

LEGEND

These standard symbols will be found in the drawing.

- LIGHT POLE
- FOUND MONUMENT
- STORM DRAIN INLET
- STORM DRAIN MANHOLE
- TREE DECIDUOUS
- UTILITY POLE

BC	BOTTOM OF CURB
CONC	CONCRETE SURFACE
EC	EDGE OF CONCRETE
ELCB	ELECTRICAL CABINET
ELTR	ELECTRICAL TRANSFORMER
LP	LIGHT POLE TOP
PS	PAINT STRIPING
RTOP	ROOF TOP
SDINL	STORM DRAIN INLET
TC	TOP OF CURB
TOWER	TOWER TOP
TW	WALL TOP

- BOUNDARY LINE
- CENTER LINE
- MISC. PROPERTY LINE
- MISC. TIE LINE
- RIGHT-OF-WAY LINE
- EASEMENT LINE
- FENCE LINE

LEGEND

1) This is not a boundary survey. This is a specialized topographic map. The property lines and easements shown hereon are from record information as noted hereon. Floyd Surveying translated the topographic survey to record information using the two found monuments shown hereon. No title research was performed by Floyd Surveying.

2) Any changes made to the information on this plan, without the written consent of Floyd Surveying relieves Floyd Surveying of any and all liability.

3) These drawings & specifications are the property & copyright of Floyd Surveying & shall not be used on any other work except by agreement with the Surveyor. Written dimensions shall take preference over scaled & shall be verified on the job site. Any discrepancy shall be brought to the notice of the Surveyor prior to commencement of any work.

4) Field survey completed on MAY 5, 2014.

DETAIL SITE PLAN

SCALE: 1"=10' (10 5 0 10)

GENERAL NOTES

TOPOGRAPHIC SURVEY
LS2

[redacted]

GENERAL NOTES:
1. CONSTRUCTION STAGING AREA TO BE DETERMINED AT PRE CONSTRUCTION WALK WITH LANDLORD & AUTHORITY

2. VERIFY POWER/UTILITY DESIGN PRIOR TO CONSTRUCTION.

3. EXISTING DRAINAGE AND PATTERN TO REMAIN THE SAME.

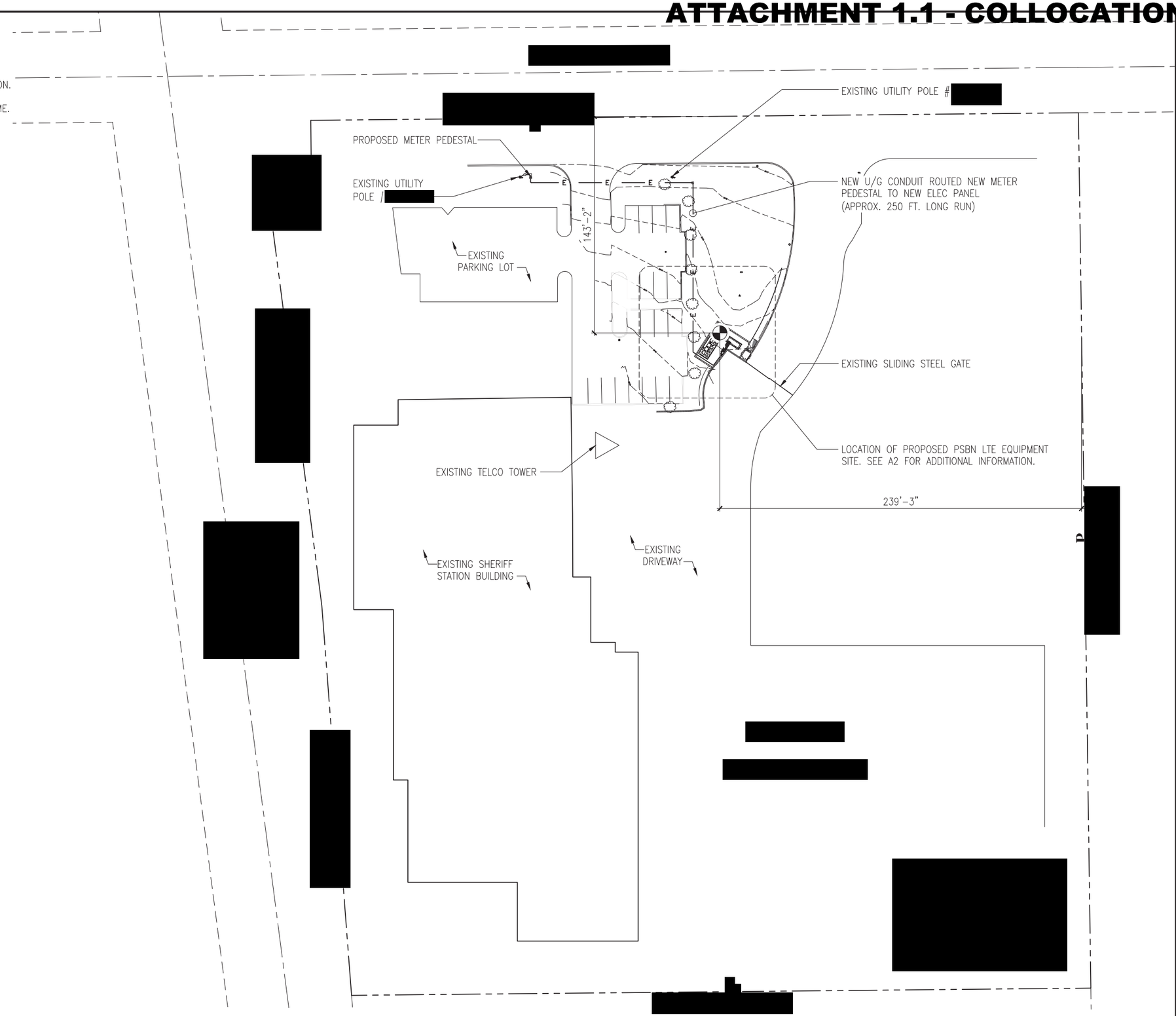

12°25'
MAGNETIC NORTH

SITE PLAN & NOTES
SCALE: 1"=30'

30 0 15 30
SCALE: 1"= 30'

LA-RICS
Los Angeles Regional Interoperable Communications System

[redacted]

SITE PLAN
A1
[redacted]

NOTE: ALL INFORMATION IS SUBJECT TO FIELD VERIFICATION. ALL INFORMATION IS CONFIDENTIAL AND NOT FOR PUBLIC DISTRIBUTION WITHOUT EXPRESS CONSENT OF THE LOS ANGELES REGIONAL INTEROPERABLE COMMUNICATIONS SYSTEMS AUTHORITY.

GENERAL NOTES:
1. CONSTRUCTION STAGING AREA TO BE DETERMINED AT PRE CONSTRUCTION WALK WITH LANDLORD & AUTHORITY

2. VERIFY POWER/UTILITY DESIGN PRIOR TO CONSTRUCTION.

3. EXISTING DRAINAGE AND PATTERN TO REMAIN THE SAME.

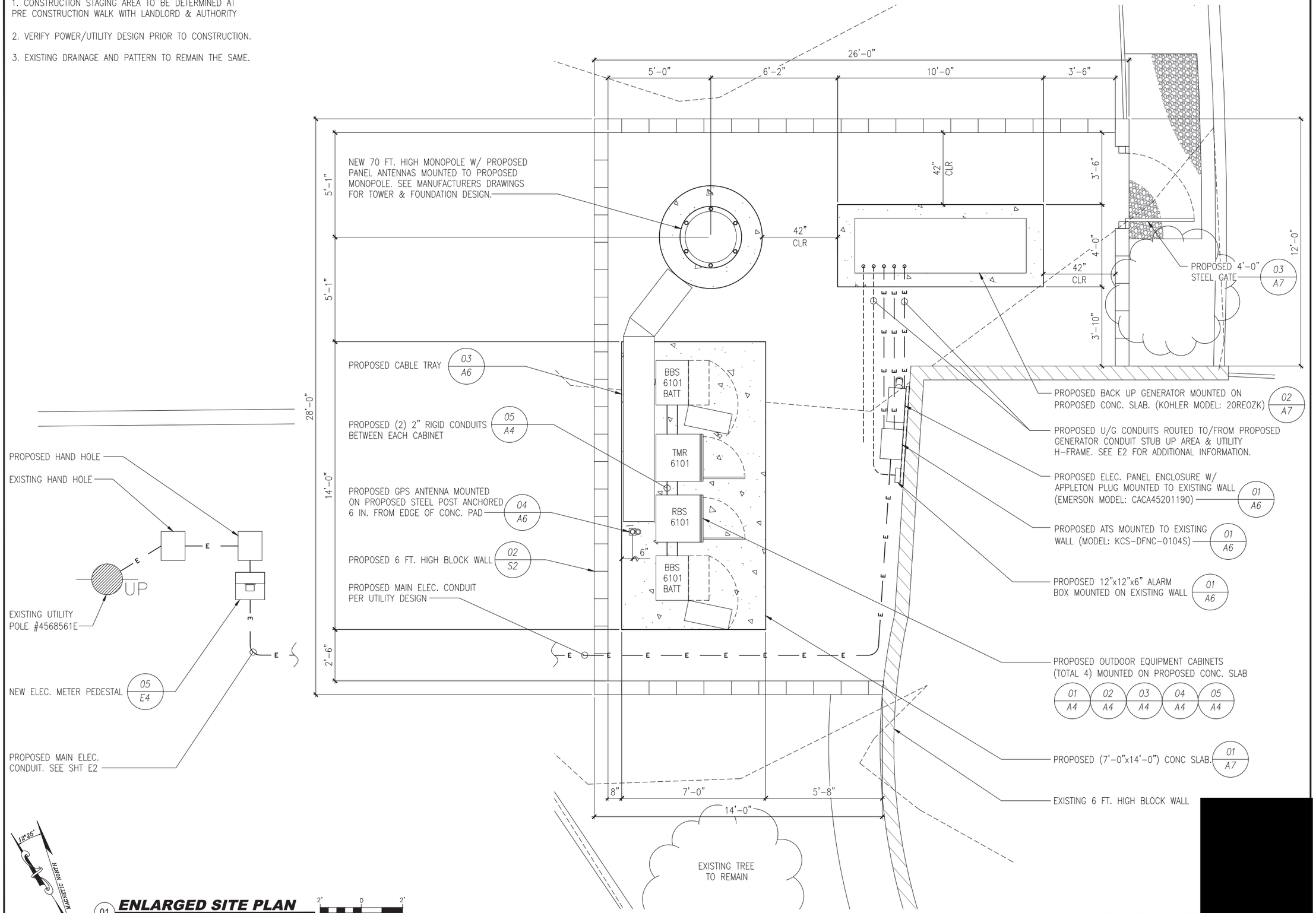

01 **ENLARGED SITE PLAN**
SCALE: 1/2"=1'-0"

2' 0 2'
SCALE: 1/2"= 1'-0"

LA-RICS
Los Angeles Regional Interoperable Communications System

[redacted]

ENLARGED SITE PLAN
A2

[redacted]

NOTE: ALL INFORMATION IS SUBJECT TO FIELD VERIFICATION. ALL INFORMATION IS CONFIDENTIAL AND NOT FOR PUBLIC DISTRIBUTION WITHOUT EXPRESS CONSENT OF THE LOS ANGELES REGIONAL INTEROPERABLE COMMUNICATIONS SYSTEMS AUTHORITY.

NOTE: ALL INFORMATION IS SUBJECT TO FIELD VERIFICATION. ALL INFORMATION IS CONFIDENTIAL AND NOT FOR PUBLIC DISTRIBUTION WITHOUT EXPRESS CONSENT OF THE LOS ANGELES REGIONAL INTEROPERABLE COMMUNICATIONS SYSTEMS AUTHORITY.

ANTENNA MOUNT SCHEDULE		
RAD CENTER	ANTENNA	SECTOR
69'	LNX-6515DS-A1M	
69'	LNX-6515DS-A1M	
69'	LNX-6515DS-A1M	
69'	LNX-6515DS-A1M	
69'	LNX-6515DS-A1M	
69'	LNX-6515DS-A1M	

MICROWAVE MOUNT SCHEDULE	
RAD CENTER	MICROWAVE DISH
69'	
69'	
69'	

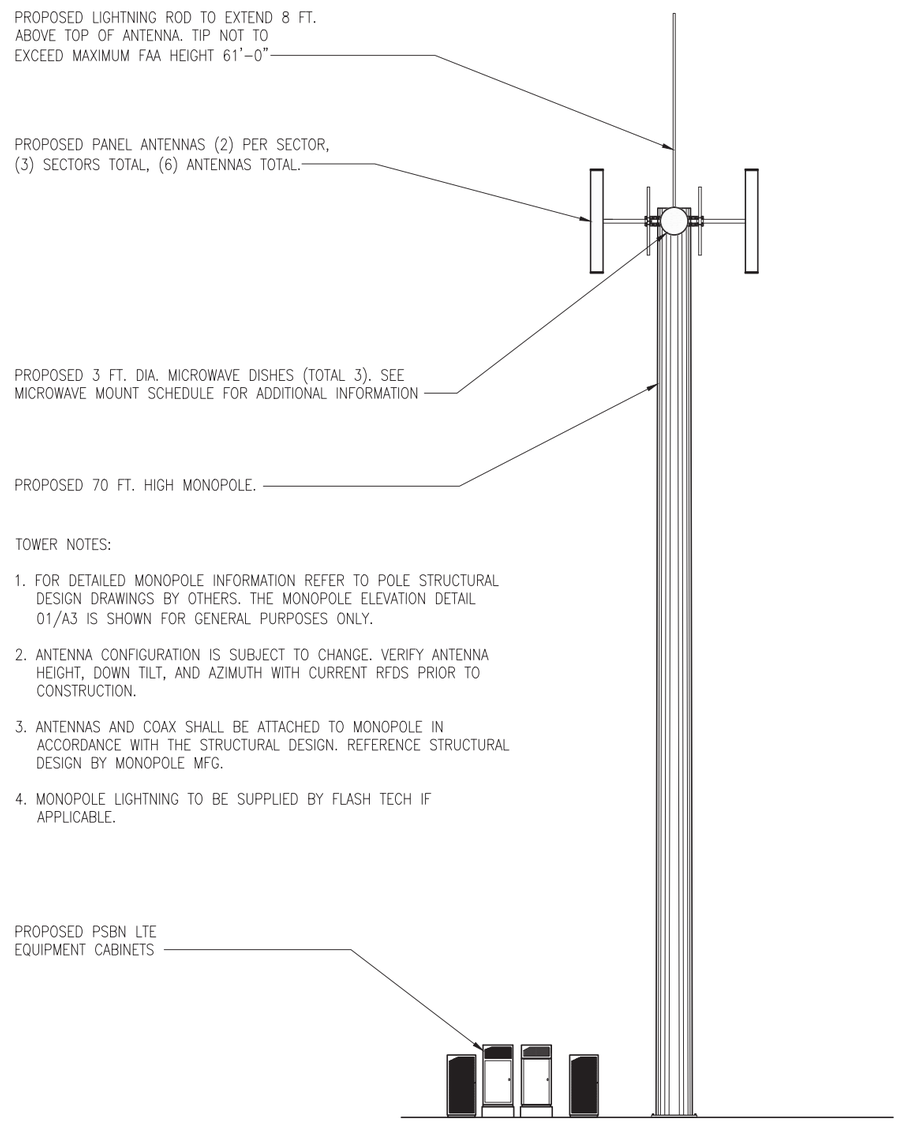

TOWER NOTES:

1. FOR DETAILED MONOPOLE INFORMATION REFER TO POLE STRUCTURAL DESIGN DRAWINGS BY OTHERS. THE MONOPOLE ELEVATION DETAIL 01/A3 IS SHOWN FOR GENERAL PURPOSES ONLY.
2. ANTENNA CONFIGURATION IS SUBJECT TO CHANGE. VERIFY ANTENNA HEIGHT, DOWN TILT, AND AZIMUTH WITH CURRENT RFDS PRIOR TO CONSTRUCTION.
3. ANTENNAS AND COAX SHALL BE ATTACHED TO MONOPOLE IN ACCORDANCE WITH THE STRUCTURAL DESIGN. REFERENCE STRUCTURAL DESIGN BY MONOPOLE MFG.
4. MONOPOLE LIGHTNING TO BE SUPPLIED BY FLASH TECH IF APPLICABLE.

01 **TOWER ELEVATION**
SCALE: NTS

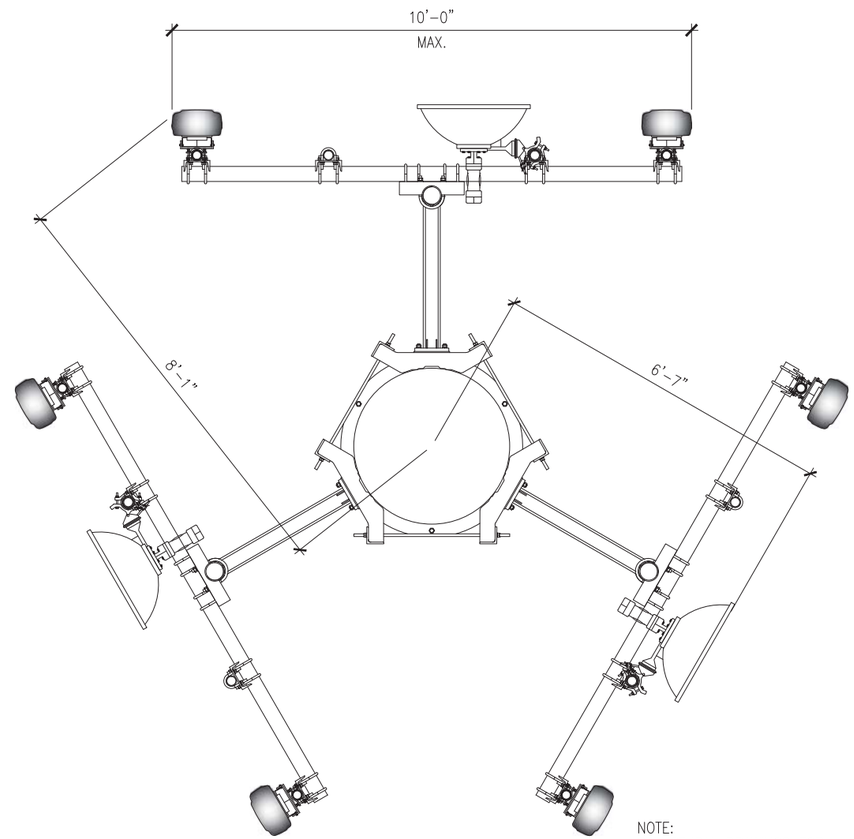

NOTE:
STRUCTURAL DRAWINGS FOR TRI-COLLAR BRACKET ASSEMBLY-SEE DRAWING #

NOTES:

1. JUMPER TO BE MOUNTED 1 FT. AWAY FROM MAINLINE & ANTENNA CONNECTORS (EACH WAY) THEN EVERY 2 FT. UP TO ANTENNA.
2. NO PIPE TO PIPE ANTENNA MOUNT PERMITTED.
3. ACTUAL T-ARM MOUNT, ANTENNA, & MICROWAVE MOUNTING LOCATIONS AND AZIMUTHS TO BE INSTALLED PER FINAL RFDS SHEET. NEED TO VERIFY RFDS PRIOR TO INSTALLATION.

03 **TYPICAL ANTENNA / MICROWAVE LAYOUT PLAN**
SCALE: NTS

LA-RICS
Los Angeles Regional Interoperable Communications System

[redacted]

TOWER ELEVATION
A3

NOTE: ALL INFORMATION IS SUBJECT TO FIELD VERIFICATION. ALL INFORMATION IS CONFIDENTIAL AND NOT FOR PUBLIC DISTRIBUTION WITHOUT EXPRESS CONSENT OF THE LA RANGE EQUIPMENT OWNER, LA-RICS COMMUNICATIONS SYSTEM.

LA-RICS
Los Angeles Regional Interoperable Communications System

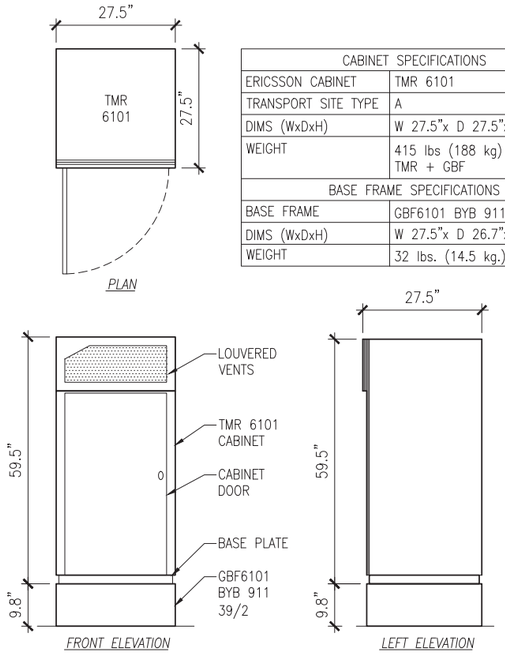

CABINET SPECIFICATIONS	
ERICSSON CABINET	TMR 6101
TRANSPORT SITE TYPE	A
DIMS (WxDxH)	W 27.5"x D 27.5"x H 59.5"
WEIGHT	415 lbs (188 kg) TMR + GBF
BASE FRAME SPECIFICATIONS	
BASE FRAME	GBF6101 BYB 911 39/2
DIMS (WxDxH)	W 27.5"x D 26.7"x H 9.5"
WEIGHT	32 lbs. (14.5 kg.)

TRANSPORT SITE A

ALL INSTALLED CABINET TO BE KEYED THE SAME

01 **TMR OUTDOOR EQUIPMENT CABINET**
SCALE: NTS

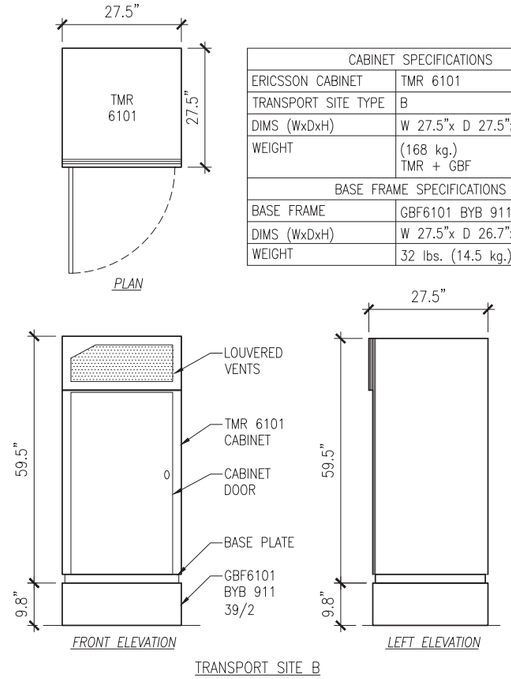

CABINET SPECIFICATIONS	
ERICSSON CABINET	TMR 6101
TRANSPORT SITE TYPE	B
DIMS (WxDxH)	W 27.5"x D 27.5"x H 59.5"
WEIGHT	(168 kg.) TMR + GBF
BASE FRAME SPECIFICATIONS	
BASE FRAME	GBF6101 BYB 911 39/2
DIMS (WxDxH)	W 27.5"x D 26.7"x H 9.5"
WEIGHT	32 lbs. (14.5 kg.)

TRANSPORT SITE B

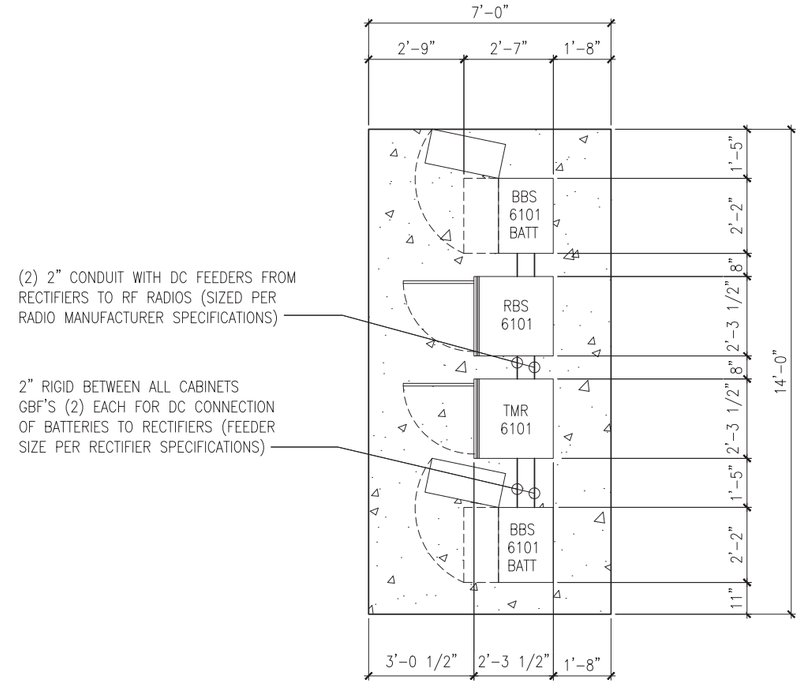

05 **TYP. CABINET LAYOUT CONFIGURATION W/ CABINET SEPARATION**
SCALE: 1/2"=1'-0"

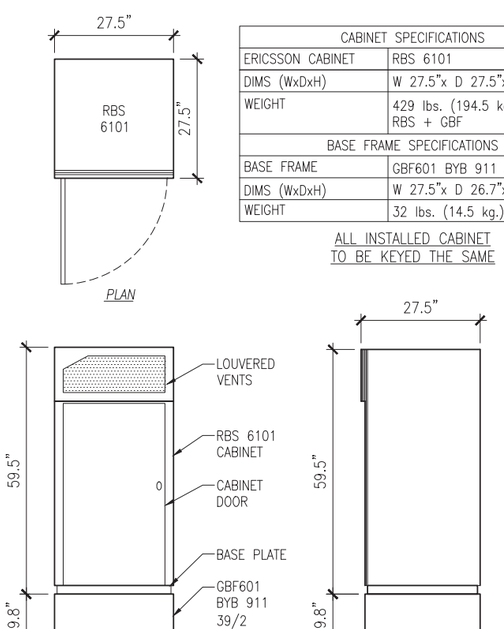

CABINET SPECIFICATIONS	
ERICSSON CABINET	RBS 6101
DIMS (WxDxH)	W 27.5"x D 27.5"x H 59.5"
WEIGHT	429 lbs. (194.5 kg.) RBS + GBF
BASE FRAME SPECIFICATIONS	
BASE FRAME	GBF601 BYB 911 39/2
DIMS (WxDxH)	W 27.5"x D 26.7"x H 9.5"
WEIGHT	32 lbs. (14.5 kg.)

ALL INSTALLED CABINET TO BE KEYED THE SAME

02 **RBS OUTDOOR EQUIPMENT CABINET**
SCALE: NTS

WEIGHT	
	WEIGHT W/O BATTERIES AND CABLES
UNIT	BMK 901 115 R1B & R2A
CABINET W/O DOOR	85 kg.
EQ ZONE 4 CABINET W/O DOOR	148 kg.
CABINET WITH DOOR	128 kg.
EQ ZONE 4 CABINET WITH DOOR	191 kg.

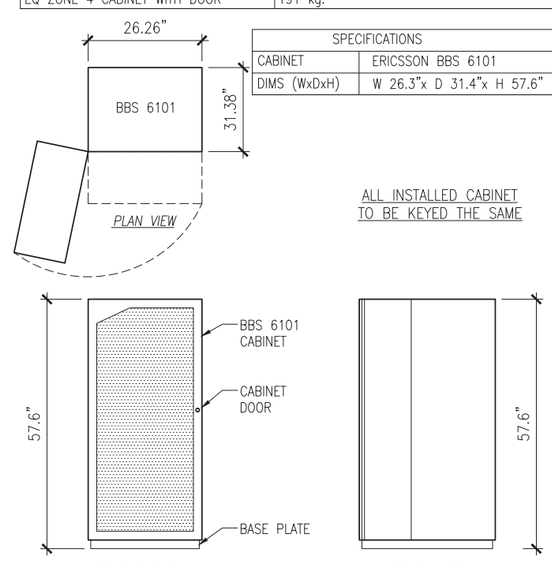

SPECIFICATIONS	
CABINET	ERICSSON BBS 6101
DIMS (WxDxH)	W 26.3"x D 31.4"x H 57.6"

ALL INSTALLED CABINET TO BE KEYED THE SAME

03 **BBS OUTDOOR EQUIPMENT CABINET**
SCALE: NTS

[redacted]

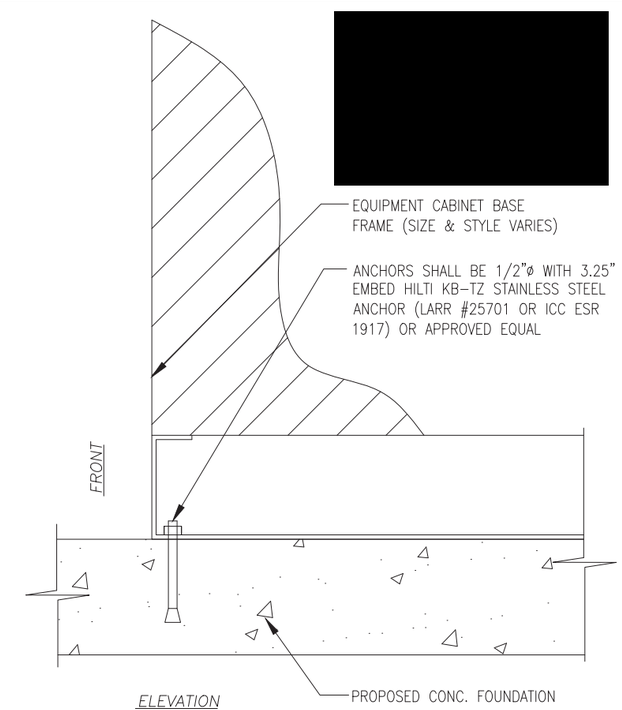

04 **EQUIP, CABINET ATTACHMENT DETAIL**
SCALE: NTS

[redacted]

EQUIPMENT DETAILS
A4

NOTE: ALL INFORMATION IS SUBJECT TO FIELD VERIFICATION. ALL INFORMATION IS CONFIDENTIAL AND NOT FOR PUBLIC DISTRIBUTION WITHOUT EXPRESS CONSENT OF THE LOS ANGELES REGIONAL INTEROPERABLE COMMUNICATIONS SYSTEM AUTHORITY.

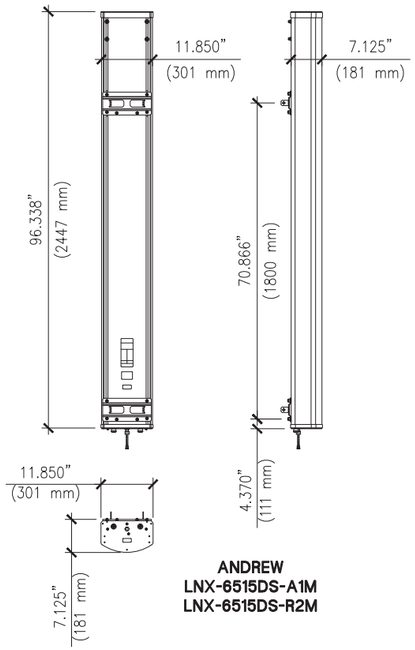

ANDREW
LNX-6515DS-A1M
LNX-6515DS-R2M

01 **ANTENNA ATTACHMENT DETAILS**
SCALE: NTS

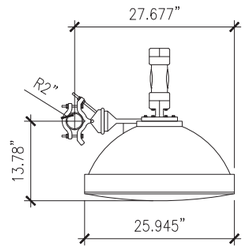

TOP VIEW

SPECIFICATIONS	
ANTENNA ANT2 0.6 10 HP	
DIMS (DIAMETER X DEPTH)	ø25.945" x 13.780"
WEIGHT: 33.51 lbs (15.2 Kg) INCLUDING MOUNTING KIT, BUT EXCLUDING PIPE MOUNT	

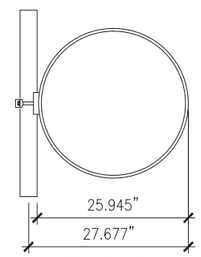

FRONT VIEW

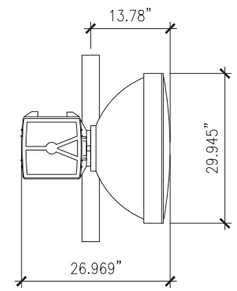

SIDE VIEW

02 **MICROWAVE DISH ATTACHMENT**
SCALE: NTS

03 **NOT USED**
SCALE: NTS

04 **NOT USED**
SCALE: NTS

05 **NOT USED**
SCALE: NTS

[redacted]

LA-RICS
Los Angeles Regional Interoperable Communications System

[redacted]

EQUIPMENT DETAILS
A4.1

[redacted]

AGENDA IT[redacted]CLOSURE

NOTE: ALL INFORMATION IS SUBJECT TO FIELD VERIFICATION. ALL INFORMATION IS CONFIDENTIAL AND NOT FOR PUBLIC DISTRIBUTION WITHOUT EXPRESS CONSENT OF THE LOS ANGELES REGIONAL INTEROPERABLE COMMUNICATIONS SYSTEM (LA-RICS).

LA-RICS
Los Angeles Regional Interoperable Communications System

COAX COLOR CODE SCHEDULE 2x4 MIMO						
ANTENNA	SECTOR	RAU/ PORT	REFERENCE DESIGNATOR	PORT	SECTOR BAND 1 (NEAREST CONNECTION)	BAND 2
ANTENNA 1	A	1 TXRX	A1 Tx/Rx	1 (+45°)	RED	BLUE
ANTENNA 1	A	1 Rxdiv	A1 Rx	2 (−45°)	RED	ORANGE
ANTENNA 2	A	2 Rxdiv	A2 Rx	1 (+45°)	RED	GREEN
ANTENNA 2	A	2 TXRX	A2 Tx/Rx	2 (−45°)	RED	BROWN
ANTENNA 3	B	3 TXRX	B1 Tx/Rx	1 (+45°)	BLUE	BLUE
ANTENNA 3	B	3 RXdiv	B1 Rx	2 (−45°)	BLUE	ORANGE
ANTENNA 4	B	4 RXdiv	B2 Rx	1 (+45°)	BLUE	GREEN
ANTENNA 4	B	4 TXRX	B2 Tx/Rx	2 (−45°)	BLUE	BROWN
ANTENNA 5	C	5 TXRX	C1 Tx/Rx	1 (+45°)	GREEN	BLUE
ANTENNA 5	C	5 RXdiv	C1 Rx	2 (−45°)	GREEN	ORANGE
ANTENNA 6	C	6 RXdiv	C2 Rx	1 (+45°)	GREEN	GREEN
ANTENNA 6	C	6 TXRX	C2 Tx/Rx	2 (−45°)	GREEN	BROWN
GPS1			GPS1		WHITE	
GPS2			GPS2		WHITE	WHITE

COAX COLOR CODE SCHEDULE 2x2 MIMO						
ANTENNA	SECTOR	RAU/ PORT	REFERENCE DESIGNATOR	PORT	SECTOR BAND 1 (NEAREST CONNECTION)	BAND 2
ANTENNA 1	A	1 TXRX	A1 Tx/Rx	1 (+45°)	RED	BLUE
ANTENNA 1	A	1 TXRX	A2 Tx/Rx	2 (−45°)	RED	ORANGE
ANTENNA 2	–	–	–	–	RED	GREEN
ANTENNA 2	–	–	–	–	RED	BROWN
ANTENNA 3	B	3 TXRX	B1 Tx/Rx	1 (+45°)	BLUE	BLUE
ANTENNA 3	B	3 TXRX	B2 Tx/Rx	2 (−45°)	BLUE	ORANGE
ANTENNA 4	–	–	–	–	BLUE	GREEN
ANTENNA 4	–	–	–	–	BLUE	BROWN
ANTENNA 5	C	5 TXRX	C1 Tx	1 (+45°)	GREEN	BLUE
ANTENNA 5	C	5 TXRX	C2 Tx/Rx	2 (−45°)	GREEN	ORANGE
ANTENNA 6	–	–	–	–	GREEN	GREEN
ANTENNA 6	–	–	–	–	GREEN	BROWN
GPS1			GPS1		WHITE	
GPS2			GPS2		WHITE	WHITE

NOTES:

1. ALL TRANSMISSION LINES SHALL BE MARKED WITH APPROPRIATE COLOR TAPE BANDS (1" WIDE COLOR TAPE) FOR IDENTIFICATION NEAR ANTENNA, JUST BEFORE ENTERING THE LTE EQUIPMENT AS WELL AS INSIDE THE SHELTER/BUILDING, WITHIN 24" OF THE ENTRY PORT. FOR COLOR CODING SCHEME, REFERENCE TABLE THIS DETAIL. TAPE SHALL BE FADE–RESISTANT, UV–RESISTANT AND CHEMICAL RESISTANT, REFERENCE HH–I–595C.
2. WHERE VISIBILITY END TO END IS NOT POSSIBLE, ADDITIONAL BANDING SHALL BE REQUIRED.
3. ALL JUMPERS SHALL BE MARKED WITH APPROPRIATE COLOR TAPE BANDS ON BOTH ENDS.
4. 1" INCH WIDE COLOR TAPE WITH 3/4" SPACING BETWEEN BANDS.

[redacted]

01 **ANTENNA, AND COAX CABLE/COAX SCHEDULE**
SCALE: NTS

CABLE	COMMSCOPE MODEL NUMBER	MINIMUM BENDING RADIUS	SIZE
LDF4	LDF4–50A	5"	1/2"
AVA5	AVA5–50FX	10"	7/8"
CNT 400	CNT 400	1"	
CNT 600	CNT 600	1.5"	

02 **COAX & JUMPER MINIMUM BENDING RADIUS TABLE**
SCALE: NTS

[redacted]

PORT ASSIGNMENTS

A5

[redacted]

NOTE: ALL INFORMATION IS SUBJECT TO FIELD VERIFICATION. ALL INFORMATION IS CONFIDENTIAL AND NOT FOR PUBLIC DISTRIBUTION WITHOUT EXPRESS CONSENT OF THE LOS ANGELES REGIONAL INTEROPERABLE COMMUNICATIONS SYSTEMS AUTHORITY.

LA-RICS
Los Angeles Regional Interoperable Communications System

[redacted]

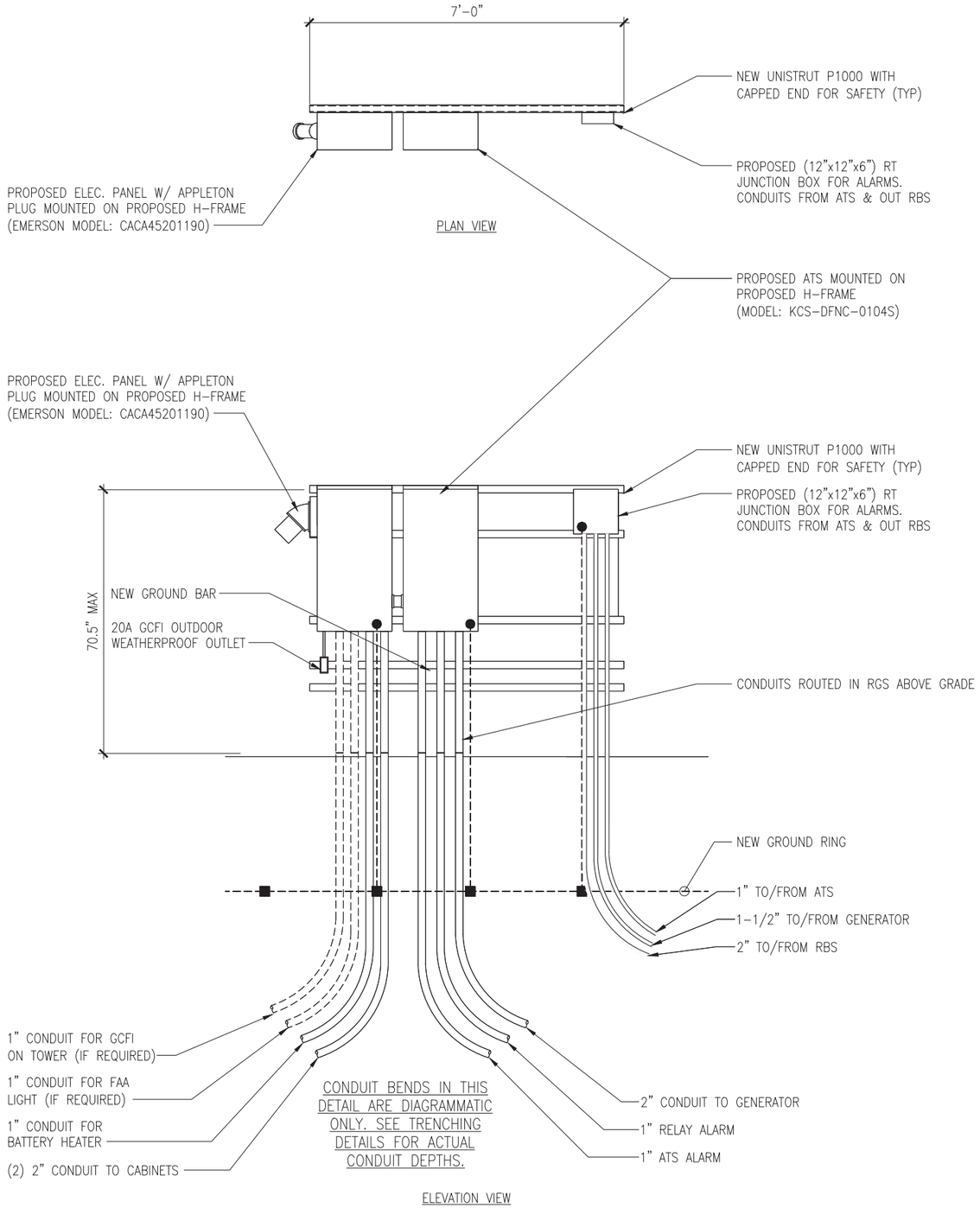

NOTES:

1. 2500 PSI OR 5000 PSI COMMERCIAL "QUIK-CRETE" MAY BE USED FOR PIERS
2. NO ZINC HARDWARE TO BE USED

01 **H-FRAME DETAIL**
SCALE: NTS

[redacted]

02 **NOT USED**
SCALE: NTS

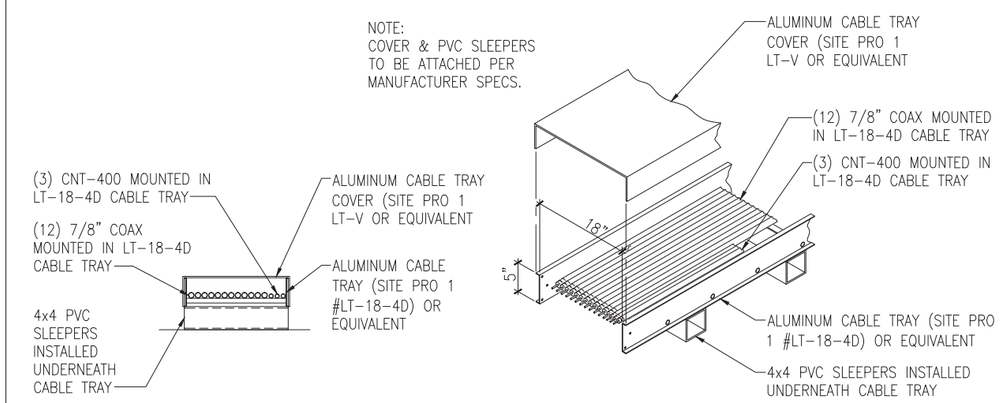

03 **COAX CABLE TRAY**
SCALE: NTS

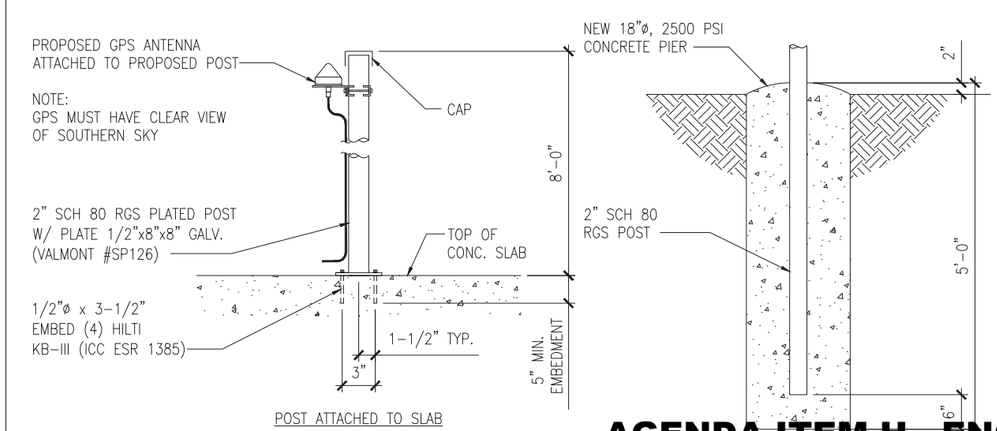

04 **GPS POST DETAIL**
SCALE: NTS

[redacted]

UTILITY DETAILS
A6

NOTE: ALL INFORMATION IS SUBJECT TO FIELD VERIFICATION. ALL INFORMATION IS CONFIDENTIAL AND NOT FOR PUBLIC DISTRIBUTION WITHOUT EXPRESS CONSENT OF THE LOS ANGELES REGIONAL INTEROPERABLE COMMUNICATIONS SYSTEMS AUTHORITY.

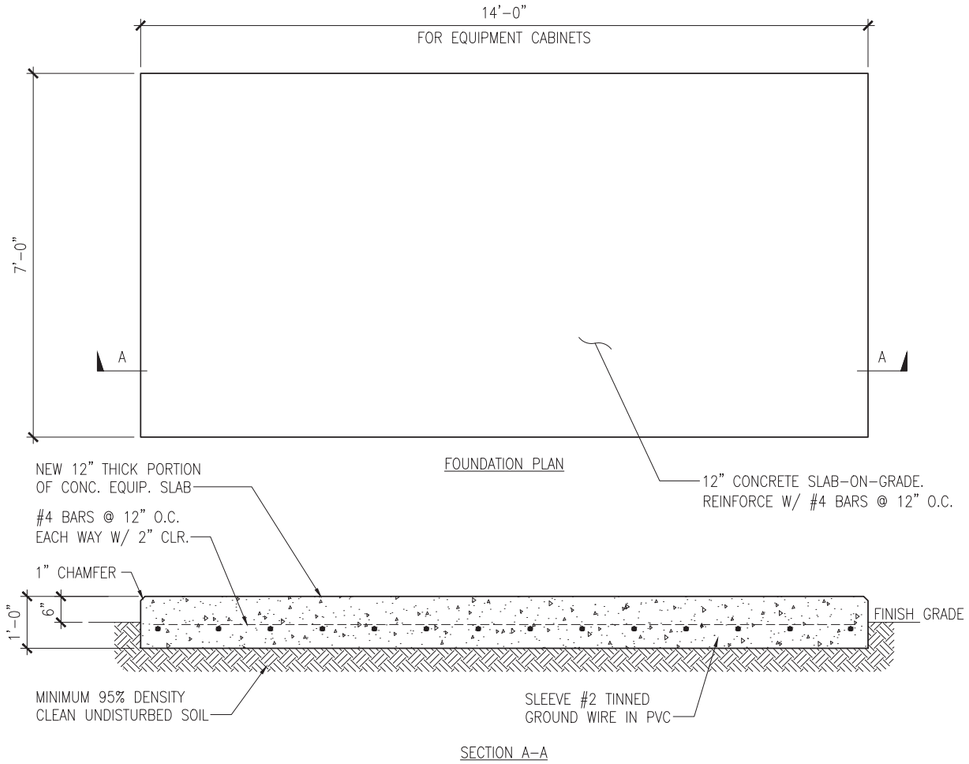

01 **EQUIPMENT FOUNDATION**
SCALE: 3/4"=1'-0"

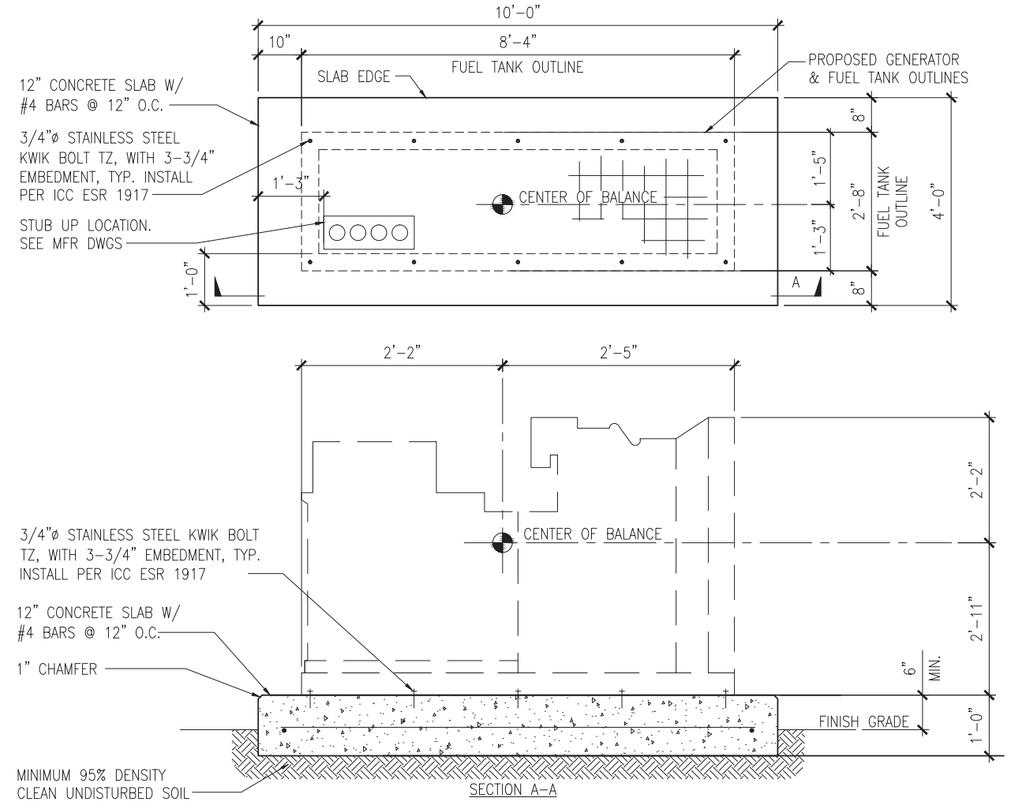

02 **GENERATOR FOUNDATION SECTION**
SCALE: NTS

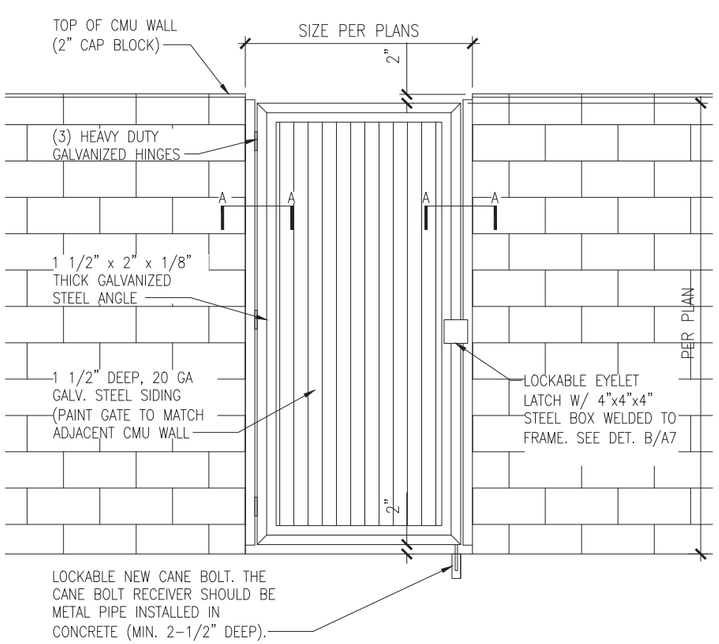

03 **CMU WALL & GATE DETAIL**
SCALE: NTS

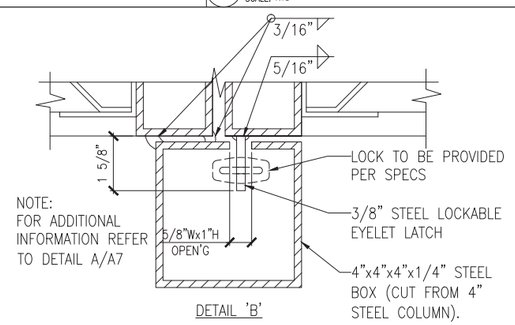

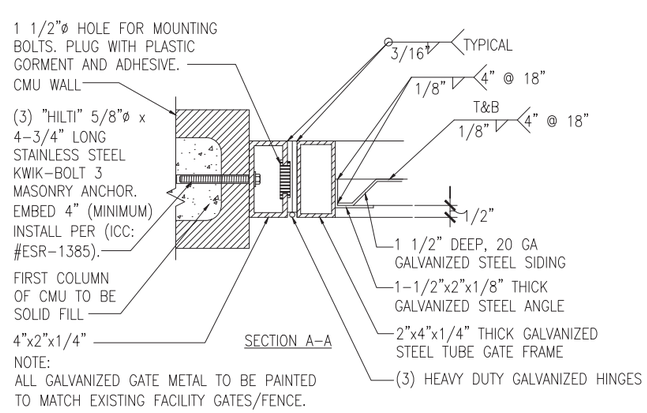

NOTE:
ALL GALVANIZED GATE METAL TO BE PAINTED TO MATCH EXISTING FACILITY GATES/FENCE.

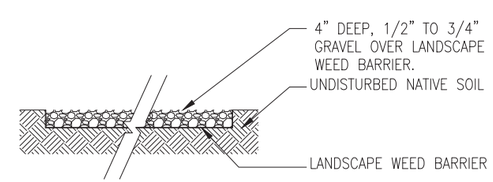

NOTES:
1. GRAVEL AND LANDSCAPE WEED BARRIER TO COVER ENTIRE LEASE AREA.
2. IF FENCED, GRAVEL AND LANDSCAPE WEED BARRIER TO EXTEN[redacted] BEYOND FENCE.
3. WEED BARRIER SHALL BE MIRAFI 140NC OR APPROVED EQUAL.

04 **GRAVEL DETAIL**
SCALE: NTS

LA-RICS
Los Angeles Regional Interoperable Communications System

[redacted]

FOUNDATION & CMU WALL
DETAILS
A7

SIGNS:

1. NO TRESPASSING SIGN:

   A. THIS SIGN SHOULD BE MADE OF 8½"x11" 60-MIL THICK WHITE PLASTIC.

   B. FOR RAW LAND SITES THE SIGN SHOULD BE PLACED ON THE PERIMETER FENCE AT THE GATE LOCATION IF A FENCE IS AVAILABLE. IF THERE IS NO PERIMETER FENCE THE SIGN SHALL BE MOUNTED TO THE EXTERIOR SIDE OF THE ENTRANCE DOOR TO THE SHELTER/EQUIPMENT ROOM. IF A SHELTER IS NOT PLANNED FOR THE SITE, POSTING OF THE SIGN TO BE LOCATED ON THE RBS CABINET DOOR. CENTERED HORIZONTALLY AND 2" BELOW SITE NAME SIGN.

   C. THE SIGN SHALL READ: "NO TRESPASSING VIOLATORS WILL BE PROSECUTED"

2. SITE NAME SIGN:

   A. THIS SIGN SHOULD BE MADE OF 8½"x11" 60-MIL THICK WHITE PLASTIC.

   B. THIS SIGN SHOULD BE PLACED ON THE EXTERIOR SIDE OF THE ENTRANCE DOOR TO THE SHELTER/EQUIPMENT ROOM. IF SHELTER NOT PLANNED FOR THIS SITE, POSTING OF THE SIGN TO BE LOCATED ONT THE RBS CABINET DOOR. CENTER HORIZONTALLY AND 6" FROM THE TOP.

   C. THE SIGN SHALL READ:
      SITE NAME
      FOR EMERGENCY ACCESS, OR
      WHEN WORKING ON THIS SITE,
      CALL: (XXX) XXX-XXXX

   D. THIS SIGN AND THE NO TRESPASSING SIGN MAY BE COMBINED IF THERE IS NO PERIMETER FENCE. THIS SIGN SHOULD BE MADE OF 8½"X11" 60-MIL THICK WHITE PLASTIC.

3. INFORMATION SIGN:

   A. THIS SIGN SHOULD BE MADE OF 8½"x11" 60-MIL THICK WHITE PLASTIC.

   B. THIS SIGN SHOULD BE PLACED ON THE LEG OF TOWER OR BASE OF MONOPOLE AT EYE LEVEL

4. CAUTION ELECTRICAL SHOCK HAZARD SIGN:

   A. THIS SIGN SHOULD BE MADE OF 8½"x11" 60-MIL THICK WHITE PLASTIC. LETTERING AND COLORING SHALL BE PER OSHA 1910.145: REGULATION OF ACCIDENT PREVENTION SIGNS AND TAGS.

   B. THIS SIGN SHALL BE POSTED ON THE PPC CABINET DOOR CENTER HORIZONTALLY AND 4" FROM THE TOP.

   C. THE SIGN SHALL READ: "CAUTION ELECTRICAL SHOCK HAZARD"

5. RF RADIATION SAFETY SIGNS:

   A. RF RADIATION SAFETY SIGNS SHALL BE POSTED AT ALL SITES ON THE FRONT GATE OF ENTRANCE INTO THE SITE. ANY SITE WHERE THE Tx ANTENNA IS LOWER THAN 10 METERS MAY REQUIRE ADDITIONAL SIGNS AND MUST BE HIGHLIGHTED TO SYSTEMS ENGINEERING.

   B. RF RADIATION NOTICE SAFETY SIGN SYMBOLS AND COLORING MUST CONFORM TO THE ANSI STANDARD 2535.3 FOR RADIO FREQUENCY ENERGY AND CURRENT FLOW SYMBOLS.

6. DANGER NO SMOKING SIGN:

   A. THIS SIGN SHOULD BE MADE OF 8½"x11" 60-MIL THICK WHITE PLASTIC. LETTERING AND COLORING SHALL BE PER OSHA 1910.145: REGULATION OF ACCIDENT PREVENTION SIGNS AND TAGS.

   B. THIS SIGN SHALL BE POSTED INSIDE COMPOUND FACING TOWARD SITE

   C. THE SIGN SHALL READ: "DANGER NO SMOKING"

   D. IF PERIMETER FENCE IS NOT PLANNED, THE SIGN SHALL BE PLACED ON THE FUEL TANK OR ON THE CMU PROTECTIVE WALL.

7. BROADBAND TECHNOLOGY OPPORTUNITIES PROGRAMS (BTOP) SIGNAGE.

   A. RECIPIENTS MUST FOLLOW MINIMUM REQUIREMENTS WHEN DEVELOPING RECOVERY ACT DISPLAY SIGNAGE FOR BTOP CONSTRUCTION SITES.

   B. RECIPIENTS MUST USE THE PRIMARY EMBLEM OR BroadbandUSA EMBLEM IN CONSTRUCTION SIGNAGE.

   C. THE EMBLEM MUST BE AT LEAST 6 IN. OR LARGER IN DIAMETER.

   D. RECIPIENTS MUST NOT CHANGE PROPORTIONS OF THE EMBLEM

   E. IF USING COLOR EMBLEM, USE THE COLORS SPECIFIED BY NTIA

   F. ALWAYS LEAVE CLEAR SPACE SURROUNDING THE LOGO EQUAL TO HALF OF THE LOGO'S RADIUS

SIGN SPECIFICATIONS:

1. THE CONTRACTOR AND OWNER'S REPRESENTATIVE SHALL FIELD VERIFY THE EXISTENCE AND CONDITION OF SIGNS ON CO-LOCATE SITES. ANY SIGNS THAT ARE MISSING OR DETERMINED TO BE IN NEED OF REPLACEMENT SHALL BE FABRICATED AND PLACED IN ACCORDANCE WITH THE FOLLOWING SPECIFICATIONS UNLESS OSHA APPROVED STANDARD SIGNS CAN BE USED.
2. ALL SIGNS SHOULD BE UV-RESISTANT FOR OUTDOOR USE.
3. ALL SIGNS SHOULD HAVE A MINIMUM 5-YEAR GUARANTEE WITHOUT SHOWING ANY SIGNS OF DEGRADATION.
4. LL SIGNS SHALL HAVE ROUNDED CORNERS AND WEATHER PROOF PRESSURE SENSITIVE ADHESIVE BACKING FOR MOUNTING PURPOSES.
5. ALL SIGNS SHALL BE PROVIDED PER THE REQUIREMENTS CONTAINED IN THIS DRAWING PACKAGE.
6. ALL SIGN LETTERS SHALL BE PRINTED OR ENGRAVED, NO STICKERS.
7. COLOR UNLESS NOTED OTHERWISE: BLACK LETTERING ON WHITE BACKGROUND. EXCEPTION: "DANGER" AND "CAUTION" SIGNS TO HAVE RED LETTERING ON WHITE BACKGROUND.
8. CONTRACTOR MUST VERIFY ALL SITE SIGNAGE WITH CONSTRUCTION PROJECT MANAGER PRIOR TO ORDERING ANY SIGNS.
9. THE CONTRACTOR WITH FURNISH AND INSTALL THESE SIGNS IN APPROPRIATE LOCATIONS, INCLUDING BUT NOT LIMITED TO; ON THE EXTERIOR OF ALL SIDES OF THE SHELTER AND FENCE.
10. THE CONTRACTOR WILL INSTALL ALL SIGNS IN A MANNER TO RESIST DETACHMENT FROM WIND-LIFT AND HARSH WEATHER (e.g., INTENSE HEAT, RAIN AND ICY CONDITIONS).

44 POINT HELVETICA
BLACK LETTERING
WHITE BACKGROUND

73 POINT HELVETICA
BLACK LETTERING
WHITE BACKGROUND

72 POINT HELVETICA
WHITE LETTERING
GREEN BACKGROUND

40 POINT HELVETICA
BLACK LETTERING
WHITE BACKGROUND

72 POINT HELVETICA
RED LETTERING
WHITE BACKGROUND

40 POINT HELVETICA
BLACK LETTERING
WHITE BACKGROUND

72 POINT HELVETICA
WHITE LETTERING
BLACK BACKGROUND

40 POINT HELVETICA
BLACK LETTERING
WHITE BACKGROUND

72 POINT HELVETICA (3/8")
RED LETTERING
WHITE BACKGROUND

72 POINT HELVETICA (3/8")
RED LETTERING
WHITE BACKGROUND

BROADBAND TECHNOLOGY
OPPORTUNITIES PROGRAM
(BTOP) SIGNAGE.

[redacted]

LA-RICS
Los Angeles Regional Interoperable Communications System

[redacted]

SITE SIGNAGE DETAILS
A8

[redacted]

01 **SITE SIGNAGE DETAILS**
SCALE: NTS

NOTE: ALL INFORMATION IS SUBJECT TO FIELD VERIFICATION. ALL INFORMATION IS CONFIDENTIAL AND NOT FOR PUBLIC DISTRIBUTION WITHOUT EXPRESS CONSENT OF THE LOS ANGELES REGIONAL INTEROPERABLE COMMUNICATIONS SYSTEMS AUTHORITY.

LA-RICS
Los Angeles Regional Interoperable Communications System

GENERAL

1. THESE DRAWINGS HAVE BEEN PREPARED BY THE ENGINEER OF RECORD PRIMARILY TO SAFEGUARD AGAINST MAJOR STRUCTURAL DAMAGE AND LOSS OF LIFE, NOT TO LIMIT DAMAGE OR MAINTAIN USE OF THE STRUCTURE. SEE THE REQUIREMENTS OF THE CURRENT ACCEPTED BUILDING CODE, AND AS LISTED IN THE BASIS FOR DESIGN.

2. PROFESSIONAL STANDARDS OF CARE HAVE BEEN USED IN THE PREPARATION OF THESE DRAWINGS, NORMALLY EXERCISED UNDER SIMILAR CIRCUMSTANCES BY REPUTABLE ENGINEERS IN THIS, OR SIMILAR LOCALITIES.

3. WORKMANSHIP WILL BE OF A QUALITY THAT MEETS OR EXCEEDS PUBLIC SAFETY EXPECTATIONS AS DEFINED IN THIS EXHIBIT B (LMR & LTE SYSTEM SPECIFICATIONS). THE USE OF INFERIOR PRACTICES OR COMPONENTS WHETHER KNOWINGLY OR UNKNOWINGLY BY THE CONTRACTOR MAY RESULT IN THE REWORK OR REPLACEMENT, AT THE CONTRACTOR'S EXPENSE, THE WORK OR THE COMPONENTS DETERMINED TO BE INADEQUATE BY THE AUTHORITY. THE CONTRACTOR'S STAFF OR CONTRACTOR'S STAFF(S) THAT VIOLATE PROJECT WORKMANSHIP STANDARDS OR SAFETY RULES SHALL, AT THE AUTHORITY'S SOLE DISCRETION, BE REMOVED FROM THE PROJECT.

4. UPON COMPLETION OF THE WORK AT THE SITE, THE CONTRACTOR WILL REMOVE ALL OF ITS TOOLS, MATERIALS, AND OTHER ARTICLES FROM THE PROPERTY. SHOULD THE CONTRACTOR FAIL TO TAKE PROMPT ACTION TO THIS END, THE AUTHORITY, AT ITS OPTION AND WITHOUT WAIVER OF SUCH OTHER RIGHTS AS IT MAY HAVE, UPON THIRTY (30) CALENDAR DAYS' NOTICE, MAY TREAT SUCH ITEMS AS ABANDONED PROPERTY

5. DESIGN OF NON-STRUCTURAL ELEMENTS (I.E. STAIRS, RAILINGS, NON-LOAD BEARING WALLS, VENEERS, CURTAIN WALLS, ETC.) AND THEIR ATTACHMENT IS NOT INCLUDED, AND MUST BE PROVIDED BY OTHERS, UNLESS SPECIFICALLY NOTED ON THESE DRAWINGS.

6. DESIGN OF PRE-ENGINEERED STRUCTURAL PRODUCTS (I.E. WOOD TRUSSES, STEEL JOISTS, OR PRE-CAST CONCRETE ELEMENTS, ETC.) IS NOT INCLUDED AND MUST BE PROVIDED BY OTHERS, UNLESS SPECIFICALLY NOTED ON THESE DRAWINGS.

7. SPECIFICATION REFERENCES (I.E. ASTM, ACI, AWS, ETC.) SHALL BE THE LATEST ACCEPTED VERSION, WHERE NOTED ON THESE DRAWINGS.

8. AN EXPERIENCED, LICENSED CONTRACTOR, WITH A WORKING KNOWLEDGE OF APPLICABLE CODES AND INDUSTRY ACCEPTED STANDARD PRACTICES, SHALL PERFORM THE WORK DEPICTED IN THESE DRAWINGS.

9. ALL WORK SHALL CONFORM TO THE MINIMUM STANDARDS OF THE CURRENT ACCEPTED BUILDING CODE FOUND IN THE BASIS FOR DESIGN, OTHER CODES, INDUSTRY SPECIFIC SPECIFICATIONS, AND STANDARDS LISTED HEREIN. THE CONTRACTOR SHALL COMPLY WITH REQUIREMENTS OF ALL REGULATORY AGENCIES WITH AUTHORITY OVER ANY PORTION OF THE WORK. WORK NOT SPECIFICALLY SHOWN ON THESE DRAWINGS SHALL CONFORM TO ALL APPLICABLE CODES AND ACCEPTED STANDARD PRACTICES.

10. THE CONTRACTOR SHALL VERIFY ALL DIMENSIONS, ELEVATIONS, AND CONDITIONS ON THESE DRAWINGS WITH THE ARCHITECTURAL DRAWINGS, AND ALL OTHER DISCIPLINE DRAWINGS, PRIOR TO START OF CONSTRUCTION. NOTIFY THE ENGINEER OF RECORD IN WRITING BEFORE THE START OF CONSTRUCTION REGARDING DISCREPANCIES, OMISSIONS, OR VARIATIONS, OR THEY WILL BECOME THE SOLE RESPONSIBILITY OF THE CONTRACTOR. NOTES AND THE SPECIFIC DETAILS ON THESE DRAWINGS TAKE PRECEDENCE OVER THE STRUCTURAL GENERAL NOTES, AND GENERAL DETAILS.

11. CONSTRUCTION METHODS ARE NOT INDICATED ON THESE DRAWINGS. THE CONTRACTOR SHALL BE SOLELY RESPONSIBLE FOR ALL METHODS, SEQUENCES, AND PROCEDURES OF CONSTRUCTION. THE CONTRACTOR SHALL PROVIDE ADEQUATE SHORING, BRACING, FORMWORK, ETC. AS REQUIRED FOR THE PROTECTION OF LIFE AND PROPERTY DURING CONSTRUCTION.

12. EXCAVATION PROCEDURES, INCLUDING SHORING AND PROTECTION OF ADJACENT PROPERTY, STRUCTURES, STREETS AND UTILITIES, SHALL BE PERFORMED IN COMPLIANCE WITH LOCAL BUILDING CODES, REGULATIONS AND SAFETY REQUIREMENT, AND SHALL BE THE CONTRACTOR'S RESPONSIBILITY.

13. CONSTRUCTION MATERIALS SHALL BE SPREAD OUT UNIFORMLY ON STRUCTURAL SYSTEMS, SUCH THAT DESIGN LIVE LOADS ARE NOT EXCEEDED.

14. VISITS TO THE CONSTRUCTION SITE BY THE ENGINEER OF RECORD ARE A RESOURCE FOR THE CONTRACTOR AND SHALL NOT BE CONSIDERED AS SPECIAL INSPECTION.

15. STRUCTURAL MEMBERS SHALL NOT HAVE OPENINGS, POCKETS, ETC. LARGER THAN 6" PLACED IN THEM, UNLESS SPECIFICALLY NOTED ON THESE DRAWINGS. WHEN DRAWINGS BY OTHERS SHOW ITEMS IN STRUCTURAL MEMBERS NOT SHOWN IN THE STRUCTURAL DRAWINGS, THE ENGINEER OF RECORD SHALL BE NOTIFIED IN WRITING TO DETERMINE THE APPROPRIATE SOLUTION.

16. WHERE EXISTING SURFACE COVER (E.G. ASPHALT, CONCRETE, GRAVEL, ETC.) IS DISTURBED OR REMOVED FOR THE INSTALLATION OF NEW FACILITIES (E.G. ANTENNA SUPPORT STRUCTURES, SHELTER, FUEL TANKS, ETC.), THE GROUND SURFACES SURROUNDING THE NEW FACILITIES WILL BE REPAIRED, PATCHED AND REINSTATED.

BASIS OF DESIGN

1. GOVERNING BUILDING CODE: 2014 L.A. COUNTY BUILDING CODE

2. NOT USED

3. WIND DESIGN: SEE STRUCTURAL CALCULATIONS BY TOWER MANUFACTURI[redacted]

4. SEISMIC DESIGN: SEE STRUCTURAL CALCULATIONS BY TOWER MANUFACTU[redacted]

5. TOWER DESIGN INFORMATION: SEE STRUCTURAL CALCULATIONS BY TOWER MANUFACTURER.

FOUNDATIONS

1. THE UPPER 18" OF THE SUBSURFACE MATERIAL SHALL BE REMOVED AND REPLACE WITH COMPACT FILL.

2. FOUNDATIONS WERE DESIGNED ACCORDING TO THE MINIMUM REQUIREMENTS OF THE CURRENT ACCEPTED BUILDING CODE LISTED IN THE BASIS FOR DESIGN. A GEOTECHNICAL ENGINEER WILL BE COMMISSIONED BY GENERAL DYNAMICS TO PROVIDE A SOILS REPORT PRIOR TO THE COMPLETION OF THE STRUCTURAL DESIGN FOR THIS PROJECT. GENERAL DYNAMICS WILL NOT ASSUME ANY LIABILITY BEYOND THE MINIMUM CODE REQUIREMENTS IN THE EVENT THAT A GEOTECHNICAL REPORT IS NOT PROVIDED.

3. FOOTINGS & FOUNDATIONS:
ALLOWABLE SOIL PRESSURE (EQ. FLUID WEIGHT): = 2000 PSF

4. ALL FORMS SHALL BE PROPERLY BRACED TO WITHSTAND THE PLACEMENT OF FRESH CONCRETE. FOOTING EXCAVATIONS SHALL BE CLEAN AND FREE FROM LOOSE DEBRIS, STANDING WATER, OR UN-COMPACTED MATERIAL AT THE TIME OF CONCRETE PLACEMENT.

5. TRENCHES AND EXCAVATIONS UNDER OR ADJACENT TO FOUNDATIONS OR SLABS SHALL BE PROPERLY BACKFILLED AND COMPACTED. UTILITY TRENCHING PARALLEL TO THE FOUNDATION SHALL BE LOCATED A MINIMUM DISTANCE EQUAL TO THE DEPTH OF THE TRENCH FROM THE FOUNDATION. THE TRENCH MAY APPROACH THE FOUNDATION AT 90 DEGREES TO THE STRUCTURE AND MAY NOT EXCEED TWO AND ONE HALF FEET WIDE. THE TRENCH APPROACH TO THE FOUNDATION MAY NOT BE LOCATED CLOSER THAN 8 FEET FROM A CORNER OF THE STRUCTURE. REFERENCE 1.11 LANDSCAPING NOTE J AND K, SHEET GN2 WITH COMPACTED TO A MINIMUM OF 95% COMPACTION.

6. THE CONTRACTOR WILL PROVIDE SUITABLE MATERIALS FOR FILL AND BACKFILL AS DEFINED IN UNIFORM SOIL CLASSIFICATION SYSTEM: AS GW, GP, SW, SP, OR SM, AND WHICH IS FREE FROM CELLULOSE MATERIALS AND DEBRIS.

7. SPECIAL INSPECTIONS;
A.VERIFY THAT FOUNDATION EXCAVATION EXTEND TO PROPER DEPTH AND BEARING STRATA.
INSPECT REINFORCING STEEL AND PLACEMENT (PERIODIC).

CONCRETE

1. THE STRUCTURAL ENGINEER OF RECORD WILL PROVIDE A MIX DESIGN FOR ALL CONCRETE POURED AND REINFORCING STEEL DESIGNS FOR ALL CONCRETE STRUCTURES ON SITE. THE CONTRACTOR WILL PROVIDE ALL REINFORCING STEEL THAT IS NEW DEFORMED BARS, CONFORMING TO ASTM A-615, GRADE 60.

2. NOT USED.

3. CONCRETE MIXES SHALL BE DESIGNED BY A CERTIFIED CONCRETE TESTING LABORATORY AND APPROVED BY THE ENGINEER OF RECORD.

4. ALL CONCRETE SHALL BE NORMAL WEIGHT 145 PCF WITH HARD-ROCK AGGREGATES.

5. MAXIMUM SLUMP SHALL BE 6 INCHES, AND THE WATER SHALL BE CLEAN AND POTABLE. PORTLAND CEMENT SHALL BE ASTM C 150 TYPE V FOR CONCRETE IN CONTACT WITH SOIL. TYPE II CEMENT MAY BE USED ELSEWHERE. ALL CEMENT IN CONTACT WITH SOIL SHALL COMPLY WITH THE SOILS REPORT REGARDING SULFATE EXPOSURE.

6. FLY ASH SHALL COMPLY WITH ASTM C 618, CLASS F, AND SHALL BE APPROVED BY THE ARCHITECT IN WRITING PRIOR TO BEING USED ON THE JOB. WHEN USED, FLY ASH CONTENT SHALL BE 15%-25%. WATER-CEMENT RATIO SHALL BE BASED ON TOTAL CEMENTITIOUS MATERIAL.

7. AGGREGATES SHALL COMPLY WITH ASTM C 33. USE 3/4 INCH MAXIMUM AGGREGATE IN STRUCTURAL CONCRETE. 1-1/2 INCH MAXIMUM IN SLABS ON GRADE AND 3/8 INCH PEA GRAVEL IN GROUTS, UNLESS SPECIFICALLY NOTED OTHERWISE ON THE PLANS, OR BY WRITTEN APPROVAL OF THE ENGINEER OF RECORD.

8. NO MORE THAN 90 MINUTES SHALL ELAPSE BETWEEN CONCRETE BATCHING AND PLACEMENT OF CONCRETE UNLESS APPROVED IN WRITING BY THE ENGINEER OF RECORD.

9. CONCRETE MIXING, PLACEMENT AND QUALITY SHALL BE PER THE CURRENT ACCEPTED CODE (LISTED IN THE BASIS FOR DESIGN). MECHANICALLY VIBRATE ALL CONCRETE. VIBRATE SLABS ON GRADE AROUND AND UNDER FLOOR DUCTS OR SIMILAR ELEMENTS.

CONCRETE (CONTINUE)

10. REMOVE ALL DEBRIS FROM FORMS BEFORE PLACING CONCRETE. CONCRETE SHALL BE CAREFULLY PLACED IN REINFORCED ELEMENTS TO AVOID SEGREGATION OF AGGREGATES. UNCONFINED FALL OF CONCRETE SHALL NOT EXCEED FIVE FEET, UNLESS APPROVED IN WRITING BY THE ENGINEER OF RECORD.

11. REINFORCING, DOWELS, BOLTS, ANCHORS, SLEEVES, EMBEDS, ETC. SHALL BE SECURELY POSITIONED IN THE FORMS PRIOR TO PLACEMENT OF CONCRETE.

12. HIGH EARLY STRENGTH CONCRETE MAY BE USED WHEN REQUESTED BY THE CONTRACTOR. MIX DESIGN DATA USING FIELD CURED SPECIMENS SHALL BE SUBMITTED FOR REVIEW AND APPROVAL.

13. PROTECT CONCRETE FROM DAMAGE OR REDUCED STRENGTH DUE TO COLD OR HOT WEATHER IN ACCORDANCE WITH ACI 305 AND 306. CONTRACTOR SHALL TAKE SPECIAL CURING PRECAUTIONS TO MINIMIZE SHRINKAGE CRACKING OF CONCRETE SLABS.

14. THE CONTRACTOR WILL PROVIDE CONCRETE THAT IS MIXED AND PLACED ONLY WHEN THE TEMPERATURE IS AT LEAST FORTY (40) DEGREES F. AND RISING. WHEN TEMPERATURE IS NINETY (90) DEGREES F. OR ABOVE, OR IS LIKELY TO RISE ABOVE NINETY (90) DEGREES F. WITHIN THE TWENTY-FOUR (24) HOUR PERIOD AFTER CONCRETE PLACEMENT, THE CONTRACTOR WILL FOLLOW RECOMMENDATIONS OF ACI 305.

15. ALTERNATIVELY, WHEN THE TEMPERATURE OF THE SURROUNDING AIR IS BELOW FORTY DEGREES (40) F., CONCRETE WILL HAVE A TEMPERATURE BETWEEN SIXTY (60) DEGREES F. AND NINETY (90) DEGREES F. WHEN PLACING CONCRETE, THE CONTRACTOR WILL FOLLOW THE RECOMMENDATIONS OF ACI 306 OR THE LATEST VERSION.

16. PIPES AND ELECTRICAL CONDUITS SHALL NOT BE EMBEDDED IN STRUCTURAL CONCRETE EXCEPT WHERE SPECIFICALLY APPROVED IN WRITING BY THE ENGINEER OF RECORD. EMBEDDED ITEMS SHALL NOT IMPAIR THE STRENGTH OF THE MEMBER.

17. SPECIAL INSPECTIONS;
A. AT THE TIME FRESH CONCRETE IS SAMPLED TO FABRICATE SPECIMENS FOR STRENGTH TESTS-MINIMUM 3500 PSI PERFORM SLUMP AND AIR CONTENT TESTS, AND DETERMINE THE TEMPERATURE OF THE CONCRETE (CONTINUOUS).
B. INSPECT CONCRETE PLACEMENT FOR PROPER APPLICATION TECHNIQUES (CONTINUOUS).

18. POLE FABRICATOR MUST BE CERTIFIED IN ONE OF THE FOLLOWING:
A. CITY OF LOS ANGELES
B. ICC
C. AIS

19. SPECIAL INSPECTORS MUST BE LOS ANGELES COUNTY CERTIFIED. SEE STRUCTURAL DRAWINGS FOR CERTIFICATION.

20. THE STRUCTURE IS CLASSIFIED AS A RISK CATEGORY IV AND THEREFORE MUST COMPLY WITH SECTION 1704.5 OF THE 2013 CBC.

MASONRY NOTES

1. MASONRY CONSTRUCTION SHALL CONFORM TO THE REQUIREMENTS OF THE "SPECIFICATIONS FOR MASONRY STRUCTURES" (ACI 530) AND THE CALIFORNIA BUILDING CODE.

2. HOLLOW LOAD BEARING MASONRY UNITS SHALL CONFORM TO ASTM C-90, GRADE N-1 AND BE MADE WITH NORMAL WEIGHT AGGREGATE. THE MINIMUM COMPRESSIVE STRENGTH (f'm) SHALL BE 1550 PSI AT 28 DAYS, AS PERMITTED BY THE UNIT STRENGTH METHOD OF ACI 530.1.

3. FILL ALL CELLS SOLIDLY WITH GROUT. GROUT SHALL CONFORM TO ASTM C-476 AND SHALL OBTAIN A MIN 28 DAY COMPRESSIVE STRENGTH OF 2500 PSI.

4. REINFORCING STEEL SHALL BE IN ACCORDANCE WITH ASTM A-615 GRADE 60. SHOP FABRICATE REINFORCING BARS WHICH ARE SHOWN TO BE HOOKED OR BENT. PROVIDE MINIMUM LAP OF 48 X BAR DIAMETER AT ALL SPLICES UNLESS INDICATED OTHERWISE.

5. MORTAR SHALL CONFORM TO ASTM C-270, TYPE S. ALL MORTAR SHALL MEET THE "PROPORTION SPECIFICATION" OF ASTM A-270 AND BE MADE WITH PORTLAND CEMENT/LIME (NON AIR ENTRAINED)

6. PROVIDE REBAR DOWELS FROM FOUNDATIONS TO MATCH VERTICAL REINFORCEMENT SIZE AND SPACING. DOWELS SHALL HAVE STANDARD 90° HOOKS AND LAP WITH THE FIRST LIFT OF REINFORCING.

7. THE MASONRY CONTRACTOR SHALL PROVIDE ALL REQUIRED TEMPORARY BRACING DURING CONSTRUCTION.

8. SPECIAL INSPECTION REQUIRED FOR ALL CMU CONSTRUCTION. UNLESS OTHERWISE NOTED.

[redacted]

STRUCTURAL NOTES
S1

NOTE: ALL INFORMATION IS SUBJECT TO FIELD VERIFICATION. ALL INFORMATION IS CONFIDENTIAL AND NOT FOR PUBLIC DISTRIBUTION WITHOUT EXPRESS CONSENT OF THE LOS ANGELES REGIONAL INTEROPERABLE COMMUNICATIONS SYSTEMS AUTHORITY.

LA-RICS
Los Angeles Regional Interoperable Communications System

[redacted]

EXPANSION BOLTS

1. ANCHORAGE OF EXPANSION BOLTS IN CONCRETE SHALL BE MINIMUM EMBEDMENT PER TABLE–1 SETTING INFORMATION. 1/2" DIAMETER EMBEDDED EXPANSION BOLTS SHALL BE PLACED @ 72" O.C. (U.N.O.) OR PER PLANS.

2. AT ALL CABINETS THERE SHALL BE A MINIMUM OF TWO BOLTS PER SIDE. ONE BOLT LOCATED NOT MORE THAN 12" OR LESS THAN SEVEN BOLT DIAMETERS FROM EACH END OF THE CORNER. A PROPERLY SIZED NUT AND WASHER SHALL BE TIGHTENED ON EACH BOLT TO THE METAL PLATE. FOR SEISMIC DESIGN CATEGORIES D–F, WASHERS SHALL BE A MINIMUM OR 0.229" THICK BY 3" SQUARE PLATE WASHER.

3. EXPANSION BOLTS SHALL BE INSTALLED NOT CLOSER THAN 6 1/2" O.C. AND SHALL BE EMBEDMENT PER TABLE–1 AND SPACED 1 3/4" FROM THE EDGE OF THE SLAB. EXPANSION BOLTS BEING INSTALLED LESS THAN 2" FROM THE EDGE OF THE CONCRETE SHALL BE HILTI KWIK BOLT 3 PER ESR–2302. SUBSTITUTIONS SHALL BE APPROVED WITH WRITTEN APPROVAL OF THE ENGINEER OF RECORD.

4. WHERE EXPANSION BOLTS HAVE BEEN DAMAGED, OR IMPROPERLY LOCATED, ONE OF THE FOLLOWING RETRO–FIT OPTIONS MAY BE USED AT THE CONTRACTORS DISCRETION.

   4.1 PROVIDE (1) 1/2" DIAMETER SIMPSON TITEN SCREW ANCHORS (ESR–1056) OR 1/2" DIAMETER ITW RAMSET/REDHEAD LDT (ER 5890) CONCRETE SCREW ANCHOR. CONCRETE SCREW ANCHORS SHALL BE EMBEDDED A MINIMUM OF 4 1/2".

   4.2 EXPANSION BOLTS OF EQUAL OR GREATER DIAMETER SHALL BE INSTALLED PER THE MANUFACTURER SPECIFICATIONS. THE BOLTS SHALL BE ONE OF THE FOLLOWING ICC–ES EVALUATION REPORTS:

   – HILTI KWIK BOLT 3 (ESR–2302)

   EQUIVALENT EXPANSION BOLTS MAY BE USED AT THE CONTRACTORS DISCRETION, PROVIDED THAT THE ALTERNATE EXPANSION ANCHORS HAVE GREATER SHEAR AND PULLOUT VALUES AT EQUAL EMBEDMENT THAN THOSE SPECIFIED ABOVE. THE EXPANSION BOLTS SHALL HAVE MINIMUM EMBEDMENT DEPTHS AS FOLLOWS:

5. DESIGN VALUES FOR EXPANSION BOLTS CAN BE FOUND WITH ICC EVALUATION REPORT DATED MAY 2015. INSTALL PER TABLE –1.

TABLE 1– SETTING INFORMATION

ANCHOR O.D.	1/2"	5/8"	3/4"
EFFECTIVE MIN. EMBEDMENT	3–1/4"	4"	4–3/4"
NOMINAL EMBEDMENT	3–5/8"	4–7/16"	4–3/4"
MIN. HOLE DEPTH	4"	4–3/4"	5–3/4"
REQUIRED TORQUE (FT–LB)	40	60	110

6. ANCHORS ARE TORQUE CONTROLLED, MECHANICAL AND EXPANSION ANCHORS. DESIGN VALUES FOR EXPANSION BOLTS CAN BE FOUND WITH ICC EVALUATION REPORT DATED MAY 2015. INSTALL PER TABLE –1.

7. THE REQUIREMENT FOR MEMBER THICKNESS, EDGE DISTANCE AND SPACING, DESCRIBED IN THESE NOTES, MUST APPLY. AN EXAMPLE OF ALLOWABLE STRESS DESIGN VALUES FOR ILLUSTRATIVE PURPOSES IS SHOW IN TABLE–2.

TABLE 2 – EXAMPLE ALLOWABLE STRESS DESIGN VALUES

		ALLOW TENSION (lbf)	
		CARBON STEEL	STAINLESS STEEL
		fc=2500 psi	
NOMINAL DIA.	EMBEDMENT DEPTH		
1/2"	2	1490	1260
	3–1/4	2420	2530
5/8"	3–1/8	2910	2910
	4	4015	4215
3/4"	3–3/4	3635	3825
	4–3/4	4690	5290

8. INSTALLATION PARAMETERS ARE PROVIDED IN TABLES 1 AND 2 AND THESE NOTES. EXPANSION BOLTS LOCATIONS MUST COMPLY WITH THESE NOTES AND PLANS AND SPECIFICATIONS AND APPROVED BY THE BUILDING OFFICIAL. ANCHORS MUST BE INSTALLED IN HOLES DRILLED INTO THE CONCRETE USING A CARBIDE–TIPPED MASONRY DRILL BITS COMPLYING WITH ANSI B212.15–1994. THE MINIMUM DRILLED HOLE DEPTH IS GIVEN IN TABLE–1. PRIOR TO INSTALLATION, DUST AND DEBRIS MUST BE REMOVED FROM THE DRILLED HOLE TO ENABLE INSTALLATION TO THE STATED EMBEDMENT DEPTH. THE ANCHOR MUST BE HAMMERED INTO THE PREDRILLED HOLE UNTIL "hnom" IS ACHIEVED. THE NUT MUST BE TIGHTENED AGAINST THE WASHER UNTIL THE TORQUE VALUES SPECIFIED IN TABLE–1 ARE ACHIEVED.

[redacted]

STRUCTURAL NOTES
S1.1

[redacted]

NOTE: ALL INFORMATION IS SUBJECT TO FIELD VERIFICATION. ALL INFORMATION IS CONFIDENTIAL AND NOT FOR PUBLIC DISTRIBUTION WITHOUT EXPRESS CONSENT OF THE LOS ANGELES REGIONAL INTEROPERABLE COMMUNICATIONS SYSTEMS AUTHORITY.

LA-RICS
Los Angeles Regional Interoperable Communications System

NOTES

A. CONCRETE MASONRY UNITS SHALL CONFORM TO ASTM C 90 (CBC 2103.1)

B. CONCRETE FOR FOOTINGS MUST HAVE A MINIMUM COMPRESSIVE STRENGTH OF 2,500 PSI AT 28 DAYS. (CBC 1805.4.2.1). CEMENT SHALL CONFORM TO ASTM C 150 (ACI 318-05 SECTION 3.2)

C. THE MORTAR MIX MUST HAVE A COMPRESSIVE STRENGTH EQUAL TO 1,800 PSI MINIMUM (CBC TABLE 2105.2.2.1.2).

D. GROUT MUST HAVE A COMPRESSIVE STRENGTH EQUAL TO 2,500 PSI MINIMUM. GROUT SHALL CONFORM TO TABLE 2103.12 OR TO ASTM C 476.

E. REINFORCING STEEL MUST BE DEFORMED AND COMPLY WITH ASTM A 615 (CBC 2103.13.1), GRADE 40 OR 60. WHEN ONE CONTINUOUS BAR CANNOT BE USED, A LAP OR SPLICE OF 40-BAR DIAMETERS IS REQUIRED.

F. NO SPECIAL INSPECTION IS REQUIRED FOR WOOD AND MASONRY FENCES UP TO 6 FEET IN HEIGHT. HEIGHT IS MEASURED FROM THE LOWEST GRADE ABUTTING THE FENCE TO THE TOP OF THE FENCE.

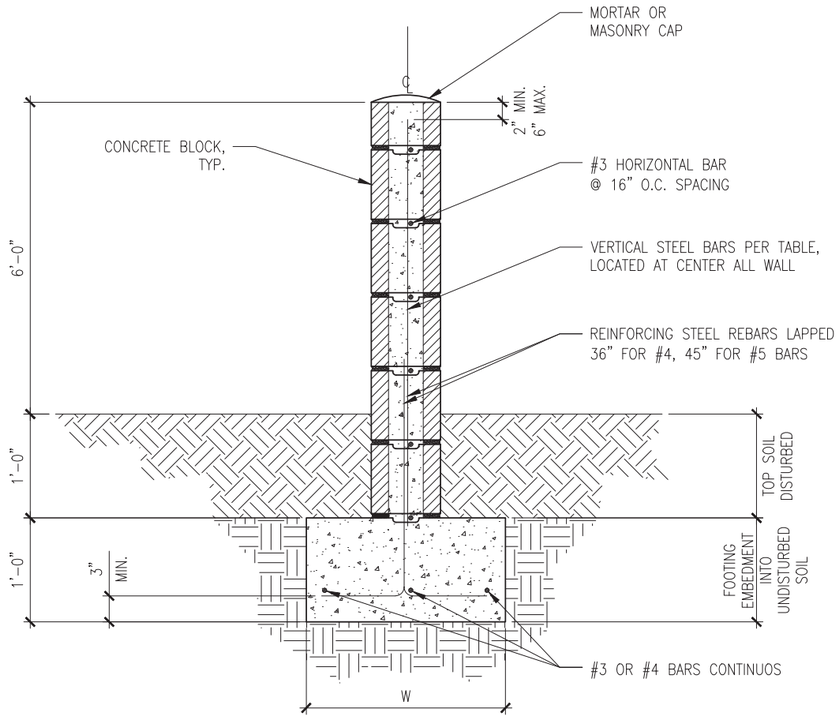

REQUIREMENTS FOR MASONRY WALLS			
FENCE HEIGHT (FEET)	MATERIAL	FOOTING WIDTH	REINFORCING STEEL
4 FT. HT.	6" CONCRETE BLOCK 8" CONCRETE BLOCK	1'-10" 1'-11"	#4 @ 16" O..C. #4 @ 24" O..C.
5 FT. HT.	6" CONCRETE BLOCK 8" CONCRETE BLOCK	2'-3" 2'-4"	#5 @ 8" O..C. #4 @ 24" O..C.
6 FT. HT.	8" CONCRETE BLOCK	2'-11"	#4 @ 8" O..C.

01 **CMU WALL DETAIL**
SCALE: 1-1/2"=1'-0"

[redacted]

STRUCTURAL NOTES
S2

NOTE: ALL INFORMATION IS SUBJECT TO FIELD VERIFICATION. ALL INFORMATION IS CONFIDENTIAL AND NOT FOR PUBLIC DISTRIBUTION WITHOUT EXPRESS CONSENT OF THE LOS ANGELES REGIONAL INTEROPERABLE COMMUNICATIONS SYSTEMS AUTHORITY.

LA-RICS
Los Angeles Regional Interoperable Communications System

[redacted]

ELECTRICAL SPECIFICATIONS:

GENERAL:

A. CONTRACTOR SHALL PROVIDE ALL ITEMS OF LABOR AND MATERIALS TO MAKE A COMPLETE INSTALLATION OF ELECTRICAL WORK, AS SHOWN ON DRAWINGS, AS SPECIFIED, AND AS NECESSARY FOR COMPLETE SYSTEMS, INCLUDING, BUT NOT LIMITED TO THE FOLLOWING:

1. MAIN POWER BRANCH/FEEDERS AS REQUIRED.
2. BRANCH FEEDER FOR POWER AND LIGHTING.
3. ALL ELECTRICAL CONDUCTORS AND CONDUIT.
4. ALL WIRING DEVICES, SAFETY SWITCHES.
5. ALL LIGHTING FIXTURES AND LAMPS.
6. ALL COMMUNICATION EMPTY CONDUIT SYSTEMS.
7. LIGHTING SURGE PROTECTION DEVICE.
8. ANTENNA AND EQUIPMENT GROUNDING.
9. APPURTENANCES
10. POWER STUDY

ELECTRICAL REQUIREMENTS:

A. ALL WORK SHALL BE DONE IN ACCORDANCE WITH ALL LOCAL AND NATIONAL ELECTRICAL CODES.
B. ALL WORK SHALL BE COMPLETED BY A CERTIFIED MASTER ELECTRICIAN.
C. ALL WORK SHALL CONFORM TO THE LATEST VERSION OF [redacted]R56 STANDARDS.
D. AFTER INSTALLATION TEST ALL CONDUCTORS FOR SHORTS AND GROUNDS BEFORE ENERGIZING.

GUARANTEE:

A. THE CONTRACTOR SHALL FURNISH A WRITTEN CERTIFICATE, GUARANTEEING ALL MATERIALS, EQUIPMENT AND LABOR FURNISHED BY THE CONTRACTOR TO BE FREE OF ALL DEFECTS FOR A PERIOD OF ONE YEAR FROM AND AFTER THE DATE OF FINAL ACCEPTANCE OF ELECTRICAL WORK. THE CONTRACTOR SHALL FURTHER GUARANTEE THAT IF DEFECTS APPEAR WITHIN THE STIPULATED GUARANTEE PERIOD, SUCH WORK SHALL BE REPLACED WITHOUT COST TO OWNER.

FEEDERS, SWITCHES, METERING EQUIPMENT:

A. MAKE ARRANGEMENTS WITH OWNERS AS NEEDED TO BRING IN BRANCH FEEDERS FOR ELECTRICAL SERVICE AS SHOWN ON DRAWINGS. PAY ALL CHARGES INVOLVED THEREWITH. FURNISH INSTALL FEEDER WIRE TO OWNER DISTRIBUTION PANEL. PROVIDE METER AS SHOWN ON DRAWINGS.

PANEL BOARD CONSTRUCTION:

A. PANEL BOARDS SHALL CONSIST OF A CAN, FRONT, INTERIOR AND CIRCUIT PROTECTIVE DEVICES AND SHALL BE MANUFACTURED IN ACCORDANCE WITH UNDERWRITER'S LABORATORIES. THE GAUGE OF METAL USED AND THE GUTTER SPACE SHALL BE IN ACCORDANCE WITH APPLICABLE UL STANDARDS. EACH PANEL SHALL HAVE A DOOR MOUNTED ON A SEMI-CONCEALED HINGES WITH A CYLINDER LOCK, INDEX CARD HOLDER PROPERLY FILLED IN AS TO CIRCUIT; ALL PANELS WITH MASTER KEY. ALL PANELS SHALL BE FURNISHED WITH BAKED ON GRAY ENAMEL, OVER RUST INHIBITOR COAT. PANEL BOARDS SHALL BE AS MANUFACTURED BY G.E. ITE, SQUARE "D" OR CUTLER HAMMER.

WIRING:

A. ALL CONDUCTORS SHALL BE MADE OF SOFT-DRAWN ANNEALED COPPER WITH CONDUCTIVITY NOT LESS THAN THAT OF 90% PURE COPPER. ALL WIRE SIZE #10 AWG AND SMALLER SHALL BE STRANDED CONDUCTOR TYPE; ALL #8 AWG AND LARGER SHALL BE STRANDED CONDUCTOR TYPE.

B. CONDUCTORS SHALL BE TYPE "THHN/THWN" INSULATION.

C. USE THE FOLLOWING COLOR CODES:

120V/208V	SYSTEMS	120/240V	SYSTEMS
PHASE A	RED	PHASE A	RED
PHASE B	BLACK	PHASE B	BLACK
PHASE C	BLUE	PHASE C	BLUE
NEUTRAL	WHITE	NEUTRAL	WHITE
GROUND	GREEN	GROUND	GREEN

D. WHEN SUB-METERING FROM EXISTING SERVICE, ELECTRICIAN SHALL VERIFY AND COORDINATE WITH FACILITIES THE EXISTING PHASING AND COLOR CODE TO ENSURE CONSISTENCY.

E. INSTALL CONDUCTORS IN CLEAN, DRY CONDUITS, USE UL APPROVED PULLING LUBRICANT WHERE REQUIRED.

F. USE #12 AS MINIMUM CONDUCTOR SIZE FOR POWER SYSTEMS. ALL CONTROL WIRES SHALL BE STRANDED AND TERMINATED WITH CRIMPED-ON LUGS.

G. MAKE CONNECTION, SPLICES AND TAPS ONLY IN APPROVED BOXES AND FITTINGS. FOR SMALL BRANCH CIRCUIT CONDUCTORS, FIRST TWIST CONDUCTORS TOGETHER, THEN INSTALL A "SCOTCHLOK" OR EQUAL SPRING CONNECTOR OF PROPER SIZE. FOR LARGE CONDUCTORS USE SPLIT-BOLT OR HYDRAULICALLY COMPRESSED CONNECTIONS, THEN APPLY ENOUGH LAYERS OF VINYL ELECTRICAL TAPE TO EQUAL THE INSULATION VALUE OF THE CONDUCTOR INSULATION.

H. WHERE FACTORY COLOR CODED CONDUCTORS ARE NOT AVAILABLE, INSTALL BANDS OF COLORED VINYL PLASTIC TAPE AT EACH END OF EACH CONDUCTOR.

CONDUIT:

A. PROVIDE A COMPLETE ASSEMBLY OF CONDUIT, TUBING OR DUCT WITH FITTINGS, INCLUDING, BUT NOT LIMITED TO CONNECTORS, NIPPLES, COUPLINGS, LOCKNUTS, BUSHINGS, EXPANSION FITTINGS, OTHER COMPONENTS AND ACCESSORIES AS NEEDED.

B. FITTINGS SHALL BE DESIGNED AND APPROVED FOR THE SPECIFIC USE INTENDED. PROVIDE INSULATED THROATS OR BUSHINGS FOR ALL CONDUITS. GROUNDING BUSHINGS SHALL ALSO HAVE INSULATED THROATS.

C. MINIMUM CONDUIT SIZE IN ALL CASES SHALL BE 1/2" UNLESS MINIMUM SIZE IS SPECIFIED TO BE LARGER FOR SPECIFIC SYSTEMS SPECIFIED ELSEWHERE IN THE SPECIFICATIONS OR ON THE DRAWINGS.

D. RIGID STEEL CONDUIT SHALL BE HEAVY-WALL STEEL TUBE WITH METALLIC CORROSION-RESISTANT COATING ON INTERIOR AND EXTERIOR, HOT DIPPED GALVANIZED, FREE FROM DEFECTS, MANUFACTURED IN ACCORDANCE TO ANSI STANDARDS, AND UL-LISTED. USE THREADED COUPLINGS. USE RIGID GALVANIZED STEEL CONDUIT IN ALL LOCATIONS UNLESS NOTED OTHERWISE.

E. UNDERGROUND CONDUIT SHALL BE SCHEDULE 40 PVC (UNLESS NOTED OTHERWISE). ALL ABOVE GROUNDING CONDUITS TO BE RIGID CONDUIT.

F. AS A MINIMUM, CONDUIT SIZES SHALL BE IN ACCORDANCE WITH NEC CONDUIT FILL REQUIREMENTS, REGARDLESS OF SIZE SCHEDULE OR INDICATED. IF LARGER SIZE IS SCHEDULED OR INDICATED, THE LARGER SIZE SHALL BE USED.

G. INSTALLATION:

1. ANCHOR CONDUIT WITH HANGERS, CONDUIT STRAPS OR OTHER DEVICES SPECIFICALLY DESIGNED FOR THE PURPOSE. WIRE TIES SHALL NOT BE PERMITTED. USE OF TRAPEZE HANGERS FOR MULTIPLE PARALLEL CONDUIT RUNS.

2. ALL CONCRETE INSERTS SHALL BE GALVANIZED OR CADMIUM PLATED; INDIVIDUAL HANGERS, TRAPEZE HANGERS AND RODS SHALL BE PRIME COATED.

3. INSTALL HORIZONTAL RUNS OF CONDUIT TO PROVIDE A NATURAL DRAIN TO PREVENT MOISTURE COLLECTING IN THE POCKETS OR TRAPS.

4. CAP CONDUCTOR ENDS UNTIL THE CONDUCTOR IS INSTALLED TO PREVENT FOREIGN OBJECTS FROM ENTERING CONDUIT.

5. FITTINGS AND CONDUITS SHALL BE APPROVED FOR GROUNDING PURPOSES OR SHALL BE JUMPERED WITH A COPPER GROUNDING CONDUCTOR OF PROPER AMPACITY. LEAVE TERMINATION OF SUCH JUMPERS EXPOSED.

6. INSTALL (2) 200 POUND NYLON PULL CORDS IN ROUGH-IN RACEWAYS.

7. INSTALL OFFSETS, PULL BOXES AND ELBOWS AS REQUIRED TO ACCOMPLISH A HARMONIOUS ROUTING OF THE SYSTEMS.

JUNCTION AND PULL BOXES:

A. USE GALVANIZED PULL AND JUNCTION BOXES THAT COMPLY WITH NEC AS TO SIZE AND CONSTRUCTION.

B. FOR JUNCTION AND PULL BOXES, USE BOXES NOT LESS THAN 4" SQUARE AND 1 1/2" DEEP WITH REMOVABLE COVERS.

C. EXTERIOR, USE CAST ALUMINUM OR CAST IRON BOXES WITH THREADED HUBS AND GASKETED COVERS

D. INSTALL JUNCTION AND PULL BOXES IN ACCESSIBLE LOCATIONS. POSITION BOXES SO COVERS CAN BE REMOVED.

E. INSTALL BOXES ON CONCEALED CONDUITS WITH COVERS FLUSH WITH FINISH.

ALARM AND STATUS SENSORS:

1. THE CONTRACTOR WILL PROVIDE SHELTER ALARM AND STATUS SENSORS, AT A MINIMUM, TO INCLUDE THE FOLLOWING SENSORS:

A. IONIZATION SENSOR(S) AS REQUIRED IN EACH CABINET FOR SMOKE DETECTION. THE NUMBER OF SENSORS WILL CONFORM TO THE REQUIRED APPLICABLE CODE.
B. A HYDROGEN SENSOR IF NEEDED DUE TO TYPE OF BATTERY SYSTEM.
C. A HUMIDITY MONITORING SENSOR
D. SHELTER/CABINET DOOR INTRUSION DETECTION SENSOR.
E. HIGH AND LOW TEMPERATURE MONITORING SENSORS.
F. AN INTERFACE TO THE CAMERA ACTIVATION ALARM (IF APPLICABLE).
G. SLEEPY CELL CONDITION (OPERATING CELL, BUT NO USER TRAFFIC AFTER AN AUTHORITY DEFINED PERIOD OF TIME)
H. HIGH VOLTAGE STANDING WAVE RATIO (VSWR)
I. ANY PSBN COMPONENT FAILURE
J. SMOKE AND/OR FIRE ALARMS
K. INDOOR TEMPERATURE AND ALARMS
L. OUTDOOR TEMPERATURE
M. CLIMATE CONTROL ALARMS
N. CABINET INTRUSION
O. EXTERIOR MOTION DETECTOR ALARMS
P. TOWER LIGHTING
Q. INTERCONNECT EQUIPMENT
R. HIGH/LOW BATTERY VOLTAGE FOR EACH BATTERY
S. UPS AUTOMATIC BYPASS OPERATION
T. RECTIFIER/INVERTER FAILURE
U. UPS COMMON TRIP ALARM (FORM C)
V. HIGH/LOW BATTERY TEMPERATURE FOR EACH BATTERY
W. LOW/HIGH -48 VDC
X. ALL RECTIFIER ALARMS
Y. LOW/HIGH TEMPERATURE OF THE -48 VDC SYSTEM
Z. GENERATOR FUEL LEVEL
AA. GENERATOR LOW FUEL ALARMS
AB. GENERATOR FUEL OVERFILL ALARMS
AC. GENERATOR BATTERY ALARMS
AD. GENERATOR ONLINE ALARMS
AE. GENERATOR HIGH TEMPERATURE ALARMS
AF. GENERATOR OVER CRANK ALARMS
AG. GENERATOR OVER SPEED ALARMS
AH. GENERATOR LOW OIL ALARMS
AI. GENERATOR TRANSFER SWITCH STATUS
AJ. AC SURGE SUPPRESSION ALARM INDICATION
AK. MASTER TIME SOURCE LOSS OF SYNC
AL. VOLTAGE STANDING WAVE RATION (VSWR) ON OUTPUT OF THE COMBINING SYSTEM
AM. LOW FORWARD POWER
AN. HIGH REFLECTED POWER
AO. INTERFERENCE MONITORING
AP. LOSS OF CONNECTIVITY ON ANY MICROWAVE OR BACKHAUL LINK
AQ. LOSS OF CONNECTIVITY TO THE INTERNET
AR. POWER AMPLIFIER FAILURE AND HIGH/LOW VOLTAGE
AS. ALARMS FROM SITE FREQUENCY AND TIME STANDARDS (E.G., GPS, ETC.).

2. THE CONTRACTOR WILL PROVIDE AND INSTALL SENSORS AND ALARMS THAT SHALL BE WIRED AND CONNECTED TO THE ALARM INTERFACE PANEL.

3. THE CONTRACTOR WILL PROVIDE SHELTERS TO INCLUDE APPROPRIATE HANDHELD FIRE EXTINGUISHER(S) PER CODE. THE FIRE EXTINGUISHER CERTIFICATION WILL BE CURRENT AS OF THE TIME OF THE ACCEPTANCE TESTING OF THE SITE.

4. THE CONTRACTOR WILL PROVIDE FIRE SUPPRESSION EQUIPMENT FOR ALL NEW CONTRACTOR PROVIDED LTE SYSTEM SHELTERS AND, SO LONG AS AN EXISTING SHELTER IS COMPLIANT WITH THE CURRENT APPLICABLE FIRE SUPPRESSION CODE, CONTRACTOR WILL PROVIDE ANY MODIFICATIONS TO EXISTING LTE SYSTEM SHELTERS REQUIRED DUE TO THE ADDITION OF THE CONTRACTOR SUPPLIED EQUIPMENT OR ADDITIONAL SQUARE FOOTAGE ADDED TO THE EXISTING SHELTER FOR THE PURPOSE OF CONTRACTOR SUPPLIED EQUIPMENT.

5. AT EXISTING FACILITIES, CONTRACTOR TO COORDINATE WITH FACILITY MAINTENANCE COMPETENT PARTY TO COLLECT ALL EXISTING ALARM PANEL INFORMATION REQUIRED FOR INTEGRATION.

NOTE: ALL INFORMATION IS SUBJECT TO FIELD VERIFICATION. ALL INFORMATION IS CONFIDENTIAL AND NOT FOR PUBLIC DISTRIBUTION WITHOUT EXPRESS CONSENT OF THE LO[illegible] COMMUNICATIONS SYSTEMS AUTHORITY.

ELECTRICAL
GENERAL NOTES
E1

[redacted]

GENERAL NOTES:
1. CONSTRUCTION STAGING AREA TO BE DETERMINED AT PRE CONSTRUCTION WALK WITH LANDLORD & AUTHORITY

2. VERIFY POWER/UTILITY DESIGN PRIOR TO CONSTRUCTION.

3. EXISTING DRAINAGE AND PATTERN TO REMAIN THE SAME.

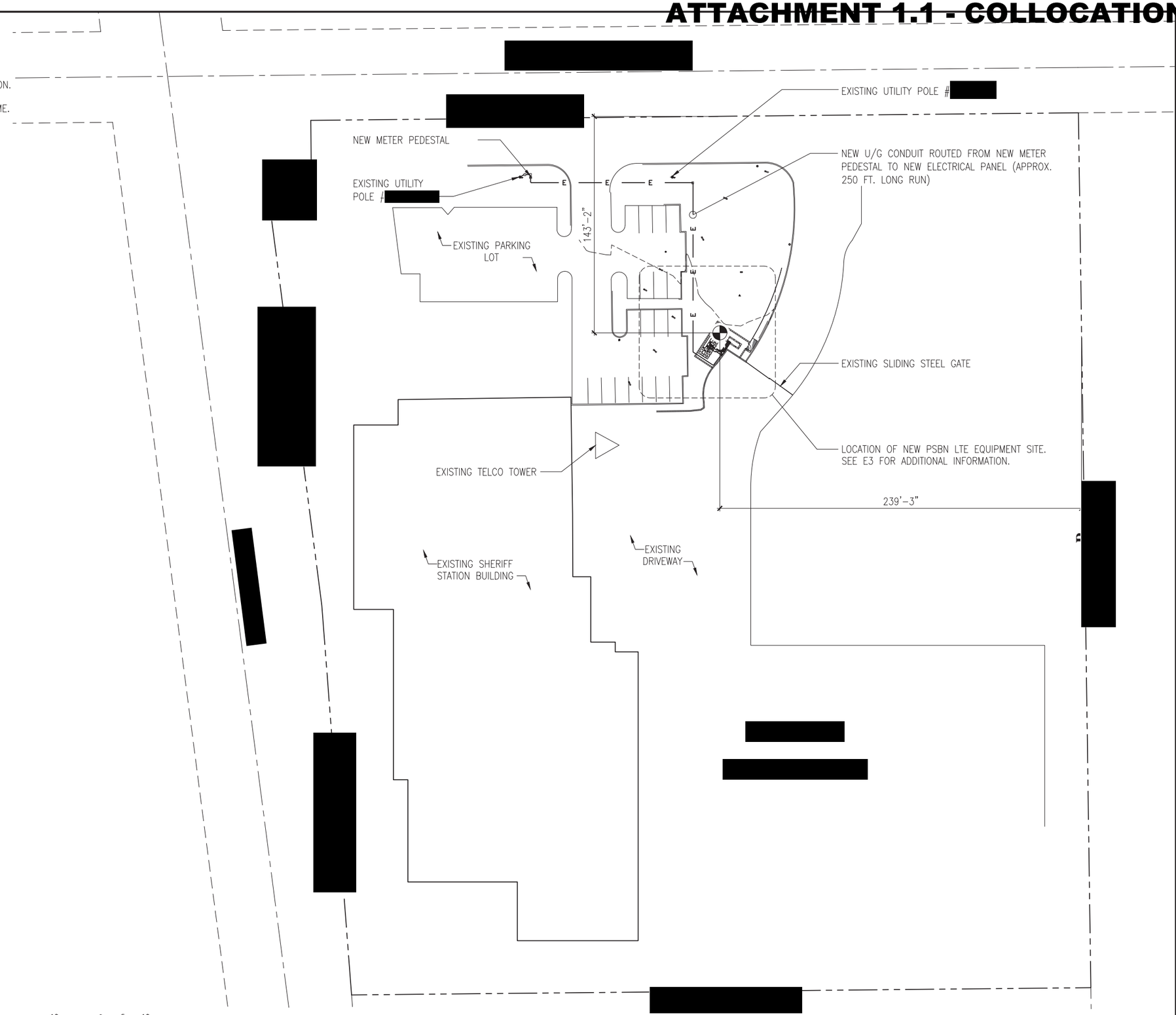

12°25'
MAGNETIC NORTH

01 **UTILITY ROUTING PLAN**
SCALE: 1"=10'

10 0 5 10
SCALE: 1"= 10'

LA-RICS
Los Angeles Regional Interoperable Communications System

[redacted]

UTILITY
ROUTING PLAN
E2

[redacted]

NOTE: ALL INFORMATION IS SUBJECT TO FIELD VERIFICATION. ALL INFORMATION IS CONFIDENTIAL AND NOT FOR PUBLIC DISTRIBUTION WITHOUT EXPRESS CONSENT OF THE LOS ANGELES REGIONAL INTEROPERABLE COMMUNICATIONS SYSTEMS AUTHORITY.

NOTE: ALL INFORMATION IS SUBJECT TO FIELD VERIFICATION. ALL INFORMATION IS CONFIDENTIAL AND NOT FOR PUBLIC DISTRIBUTION WITHOUT EXPRESS CONSENT OF THE LOS ANGELES REGIONAL INTEROPERABLE COMMUNICATIONS SYSTEMS AUTHORITY

LA-RICS
Los Angeles Regional Interoperable Communications System

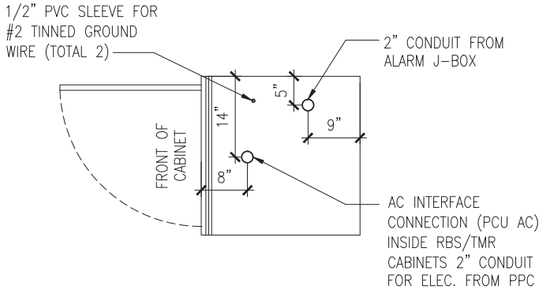

02 RBS / TMR CONDUIT STUB-UP LOCATION
1" = 1'-0"

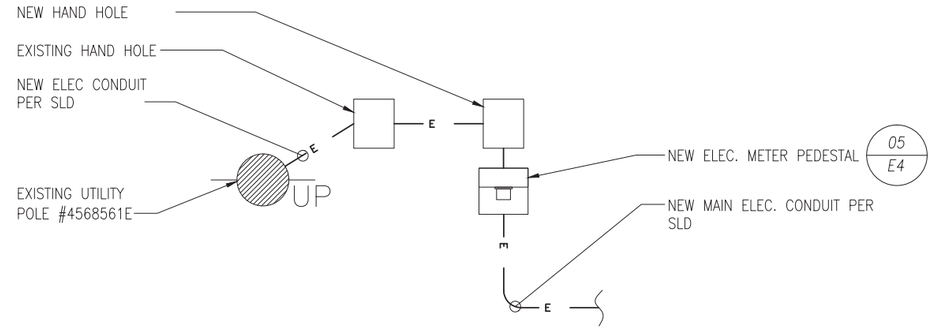

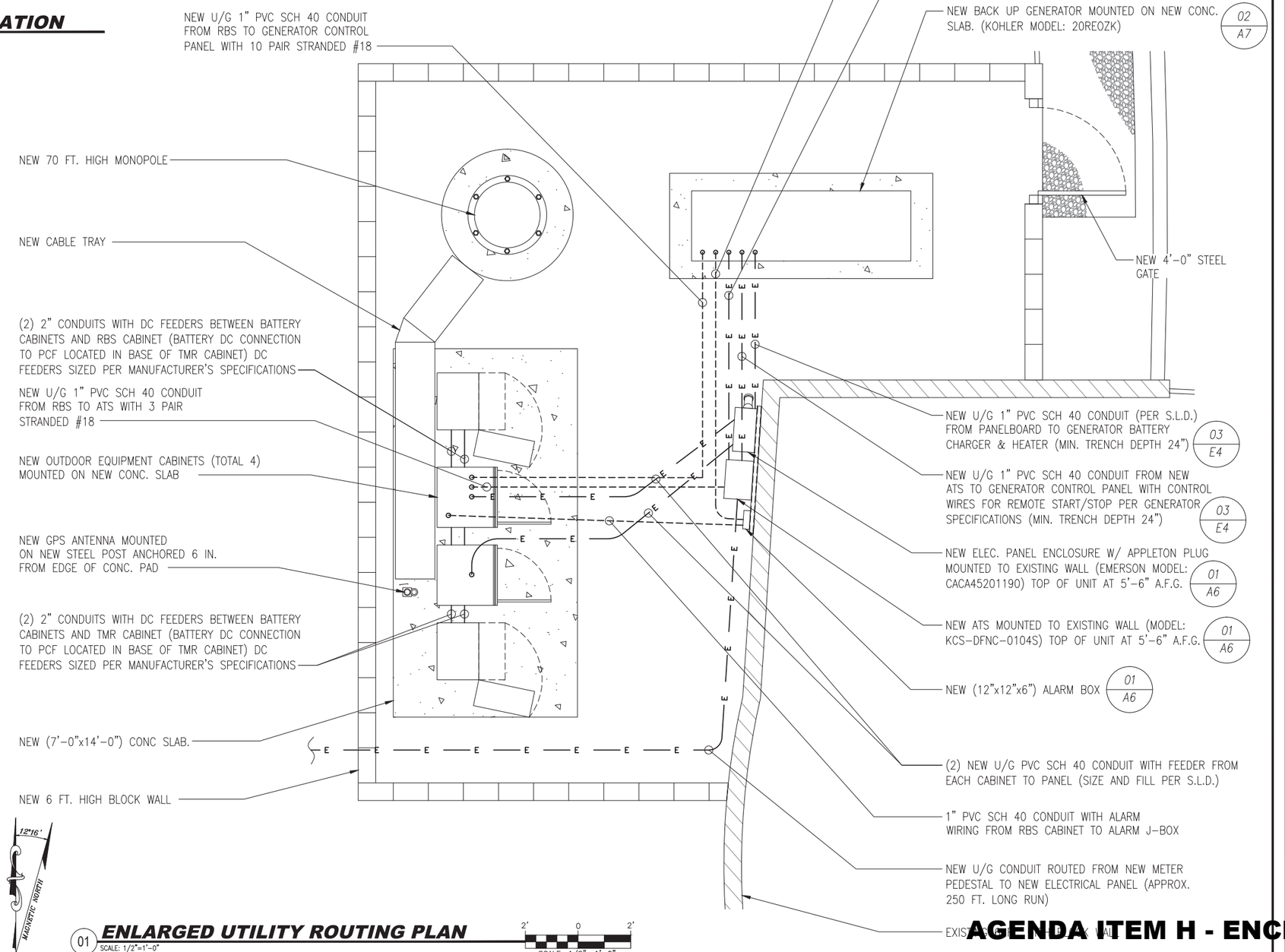

01 ENLARGED UTILITY ROUTING PLAN
SCALE: 1/2"=1'-0"

2' 0 2'
SCALE: 1/2"= 1'-0"

Underground Service Alert
Call: TOLL FREE
1-800
422-4133
TWO WORKING DAYS BEFORE YOU DIG
NOTIFY DIG-ALERT OR PRIVATE LOCATING COMPANY PRIOR TO ANY EXCAVATING OR TRENCHING

NOTES:

1. CONTRACTOR TO COORDINATE WITH LOCAL UTILITY PROVIDERS FOR REQUIREMENTS PRIOR TO INSTALLATION.

2. EXISTING UNDERGROUND UTILITIES ARE NOT SHOWN. CONTRACTOR SHALL HAVE LOCATOR SERVICE LOCATED AND MARK UNDERGROUND UTILITIES PRIOR TO CONSTRUCTION.

LEGEND

OE	OVERHEAD ELECTRICAL
OT	OVERHEAD TELCO
OE&T	OVERHEAD ELEC & TELCO
AF	ABOVE GROUND FUEL
UA	UNDER GROUND ALARMS
UA&E	UNDERGROUND ALARMS & MISC. ELECTRICAL
E	UNDERGROUND ELECTRICAL
ET	UNDERGROUND ELECTRICAL & TELCO
UL	UNDERGROUND LIGHTING
T	UNDERGROUND TELCO

ENLARGED UTILITY ROUTING PLAN
E3

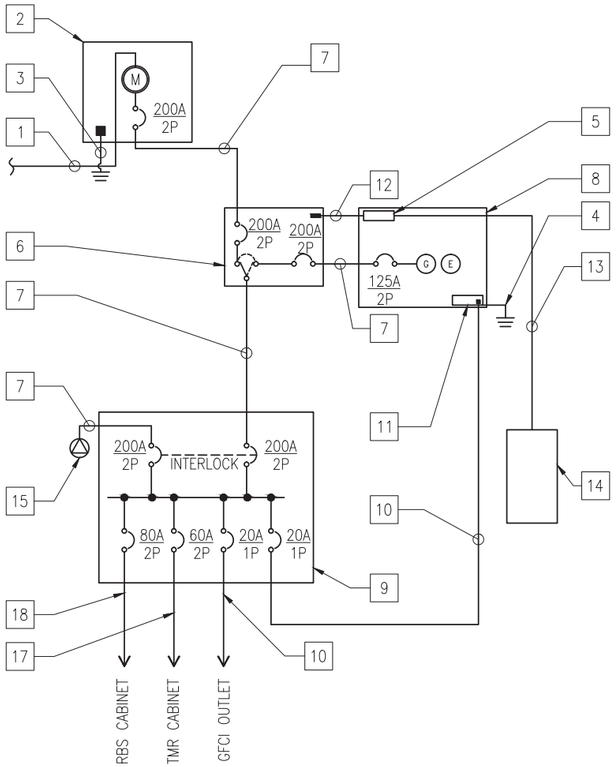

01 SINGLE LINE DIAGRAM

SCALE: NTS

SINGLE LINE DIAGRAM NOTES::

1. NEW 3" CONDUIT WITH (3)#3/0 + (1)#2 TO UTILITY POLE #4568561E
2. NEW WEATHERPROOF METER PEDESTAL RATED 200A, 120/240V, 1 PHASE, 3 WIRE COMPLETE WITH 200A FUSED PULL OUTS TYPE JJN
3. NEW MAIN ELECTRICAL SERVICE GROUND 5/8" x 8'-0" COPPERCLAD STEEL GROUND ROD WITH 1#4 COPPER STRANDED GROUND
4. PROVIDE CALDWELD GROUND CONNECTION TO GROUND RING WITH GENERATOR GROUND LUG USE (1) #2 SOLID TINNED COPPER GROUND AND DOUBLE LUG CONNECTOR.
5. NEW GENERATOR CONTROL PANEL
6. PROVIDE/INSTALL NEW AUTOMATIC TRANSFER SWITCH RATED 200A, 120/240V, 1PH, 3 WIRE WITH NEMA 3R RATED HOUSING (MODEL: KCS-DFNC-104S).
7. NEW 2" CONDUIT WITH (3) #3/0 + (1)#4 GND THHN COPPER
8. NEW 22KW GENERATOR, 120/240V, 1 PHASE, 3 WIRE (MANUFACTURER KOHLER, NO EQUAL)
9. NEW WEATHERPROOF LOAD CENTER COMPLETE WITH MANUAL TRANSFER SWITCH (WALKING BEAM INTERLOCK), SURGE SUPRRESSION, 120/240V, 1 PHASE, 3W COMPLETE WITH BREAKERS PER PANEL SCHEDULE (EMERSON MFGR #CACA45201190)
10. NEW 1" CONDUIT WITH (2)#12 + (1)#12 GND THHN COPPER
11. NEW GENERATOR BATTERY CHARGER/HEATER
12. NEW 1" CONDUIT WITH 1 PAIR #18 AWG FOR GENERATOR START / STOP
13. NEW 1" CONDUIT WITH 6 PAIR CAT 5 ALARM CABLING (SEE GENERATOR ALARM WIRING DIAGRAMS)
14. NEW 12"x12"x6" ALARM BOX
15. NEW APPLETON GENERATOR RECEPTACLE RATED 200A, 120/240V, 1PHASE, 3POLE
16. PROVIDE CALDWELD GROUND CONNECTION TO GROUND RING WITH GENERATOR GROUND LUG USE (1) #2 SOLID TINNED COPPER GROUND AND DOUBLE LUG CONNECTOR.
17. 1" CONDUIT WITH (3)#6 + (1)#8 GND THHN COPPER
18. 1" CONDUIT WITH (3)#4 + (1)#6 GND THHN COPPER

NOTE: ALL INFORMATION IS SUBJECT TO FIELD VERIFICATION. ALL INFORMATION IS CONFIDENTIAL AND NOT FOR PUBLIC DISTRIBUTION WITHOUT EXPRESS CONSENT OF THE LOS ANGELES REGIONAL INTEROPERABLE COMMUNICATIONS SYSTEMS AUTHORITY.

SITE ID: PLM	SITE NAME: PALMDALE	ADDRESS: 750 E AVENUE Q, PALMDALE, CA 93550					
200A, 120/240, 1PHASE, 3WIRE WITH 200A/2P MAIN BREAKER							
DESCRIPTION	A/P	NO.	LOAD A	LOAD B	NO.	A/P	DESCRIPTION
TVSS 20A	20/1	1	100 / 360		2	20/1	GFCI 20A
RBS CABINET	80/2	3		4080 / 3750	4	60/2	TMR CABINET
		5	4080 / 3750		6		
GEN BATTERY CHARGER & HEATER	20/1	7		360 / –	8	20/1	TOWER LIGHTING
NOT USED		9	– / –		10	20/1	GFCI @ TOWER LIGHT
NOT USED		11		– / –	12		NOT USED
NOT USED		13	– / –		14		NOT USED
NOT USED		15		– / –	16		NOT USED
NOT USED		17	– / –		18		NOT USED
NOT USED		19		– / –	20		NOT USED
NOT USED		21	– / –		22		NOT USED
NOT USED		23		– / –	24		NOT USED
			8,290	8,190			

02 PANEL SCHEDULE

SCALE: NTS

NOTES:
1. SELECTED BACKFILL OF ROCK FREE SOIL SHALL BE PLACED IN 6 IN LAYERS AT A TIME AND EACH LAYER WELL TAMPED

2. ALL HORIZONTAL RUNS OF UNDERGROUND CONDUITS SHALL BE SCHEDULE 40 PVC UNLESS INSTALLING UNDER ROAD BED OR ANY TRAFFIC AREAS WHERE IT SHALL BE SCHEDULE 80 PVC. CONDUIT SUPPLIED AND INSTALLED BY CONTRACTOR.

3. ALL ABOVE GRADE CONDUIT SHALL BE RIGID METAL CONDUIT.

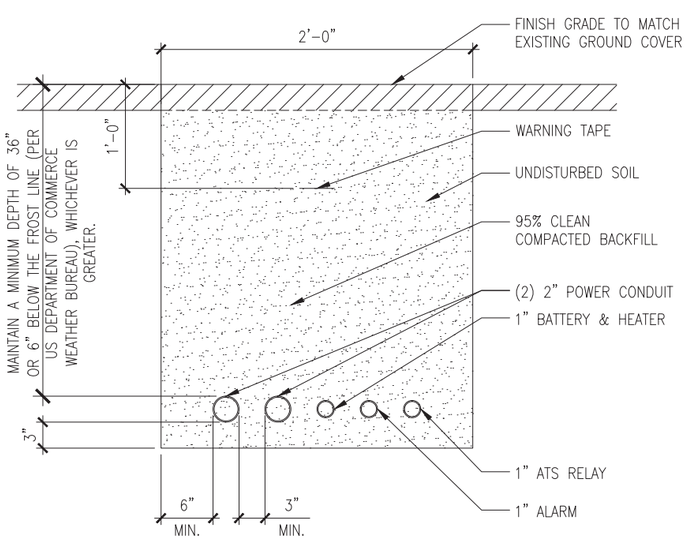

03 TYPICAL TRENCH

SCALE: NTS

NOTES:
1. SELECTED BACKFILL OF ROCK FREE SOIL SHALL BE PLACED IN 6 IN LAYERS AT A TIME AND EACH LAYER WELL TAMPED

2. ALL HORIZONTAL RUNS OF UNDERGROUND CONDUITS SHALL BE SCHEDULE 40 PVC UNLESS INSTALLING UNDER ROAD BED OR ANY TRAFFIC AREAS WHERE IT SHALL BE SCHEDULE 80 PVC. CONDUIT SUPPLIED AND INSTALLED BY CONTRACTOR.

3. ALL ABOVE GRADE CONDUIT SHALL BE RIGID METAL CONDUIT.

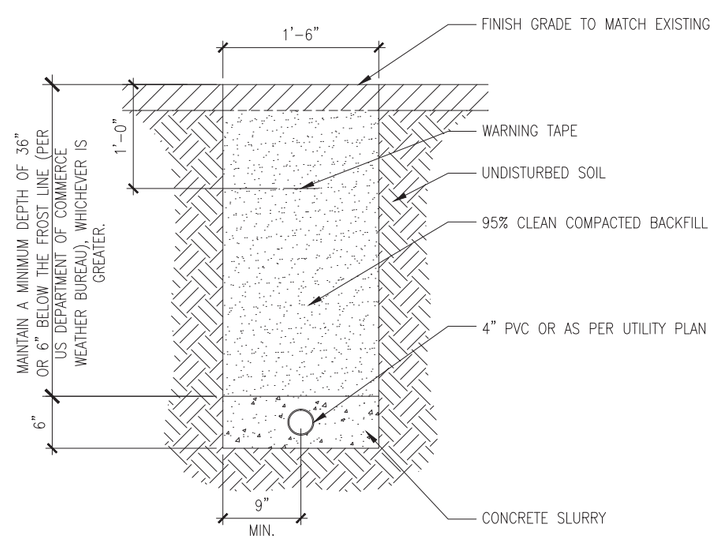

04 MAIN POWER TRENCHING

SCALE: NTS

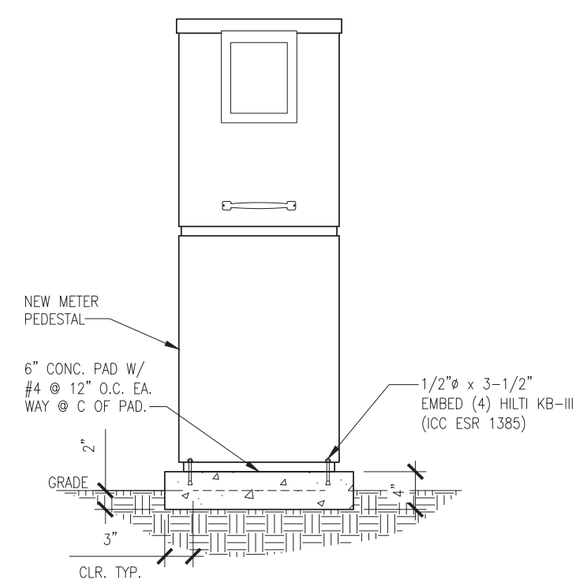

05 METER PEDESTAL

SCALE: NTS

LA-RICS
Los Angeles Regional Interoperable Communications System

SINGLE LINE DIAGRAM & DETAILS

E4

LA-RICS
Los Angeles Regional Interoperable Communications System

GROUNDING

GENERAL

A. GROUNDING SHALL BE INSTALLED PER [redacted]TANDARDS AND GUIDELINES FOR COMMUNICATIONS SITE[redacted]

B. ALL GROUNDING TO BE INSPECTED BY[redacted]PRIOR TO BACKFILL.

CONNECTIONS

A. ALL EXTERNAL GROUNDING CONNECTIONS SHALL BE MADE BY THE EXOTHERMIC PROCESS, BY IRREVERSIBLE HIGH COMPRESSION, AND/OR BY 2-HOLE LONG BARREL LUGS. NO SINGLE=HOLE, CRIMP-ON, OR SOLDER CONNECTIONS SHALL BE USED. CONNECTIONS SHALL INCLUDE ALL CABLE TO CABLE SPLICE, ALL MATERIALS USED (MOLDS, WELDING METAL, TOOLS, ETC.) SHALL BE INSTALLED PER MANUFACTURER'S RECOMMENDATIONS AND PROCEDURES.

B. ALL INTERIOR GROUNDING AND BONDING CONDUCTORS SHALL BE CONNECTED BY TWO HOLE – TYPE (COMPRESSION) CONNECTIONS. MECHANICAL CONNECTIONS, FITTINGS OR CONNECTIONS THAT DEPEND SOLELY ON SOLDER SHALL NOT BE USED.

GROUND BARS

A. ALL GROUND BARS SHALL BE 1/4" THICK BARE TINNED PLATED AND OF SUFFICIENT SIZE TO GROUND ATTACHMENTS INDICATED IN THE DRAWINGS (MIN. 2 X 12"). HOLES SHALL BE 7/16" DIAMETER ON 3/4" CENTERS TO PERMIT THE CONVENIENT USE OF TWO-HOLE LUGS.

B. THE METHOD OF ATTACHMENT OF THE GROUNDING ELECTRODE CONDUCTOR TO EXTERIOR AND TOWER GROUND BARS SHALL BE EXOTHERMIC OR IRREVERSIBLE HIGH COMPRESSION.

CABLES

A. ALL GROUNDING CABLES SHALL BE STANDARD #2 AWG TINNED SOLID BARE COPPER WIRE UNLESS INDICATED OTHERWISE ON DRAWINGS.

B. WHEN THE DIRECTION OF THE CONDUCTOR MUST CHANGE, IT SHALL BE DONE GRADUALLY. ALL BENDS SHALL BE MADE WITH THE GREATEST PRACTICAL RADIUS AND SHALL NOT BE LESS THAN 8".

C. ALL CONDUITS SHALL BE METALLICALLY SUPPORTED.

D. ALL CONDUITS USED AS RACEWAYS FOR GROUNDING CONDUCTORS SHALL BE SEALED AT BOTH ENDS IN ACCORDANCE WITH THE NATIONAL ELECTRICAL CODE (NEC).

E. PROVIDE WIRE PROTECTION PIPES AT ALL GROUND WIRES AT GRADE LEVEL PER DETAIL.

GROUND RING

A. THE GROUND RING ENCIRCLING THE BUILDING SHALL BE A MINIMUM SIZE OF 2 AWG BARE TINNED SOLID COPPER CONDUCTOR IN DIRECT CONTACT WITH THE EARTH AT A MINIMUM DEPTH OF 30 INCHES OR 6 INCHES BELOW FROST LINE. CONDUCTOR BENDS SHALL HAVE A MINIMUM RADIUS OF 8 INCHES.

B. ALL EXTERNAL GROUND RINGS ARE TO BE JOINED TOGETHER AND ALL CONNECTIONS SHALL BE EXOTHERMIC OR IRREVERSIBLE HIGH COMPRESSION. NO LUGS OR CLAMPS WILL BE ACCEPTED.

FENCE/GATE

A. GROUND ALL SECTIONS OF FENCE AND GATE AS INDICATED ON DRAWINGS. GROUND EACH GATE POST AND CORNER POST. ALL CONNECTIONS FOR THE FENCE GROUND SYSTEM SHALL BE EXOTHERMIC WELD AND INSTALLED PER MANUFACTURER'S RECOMMENDATIONS AND PROCEDURES.

DISSIMILAR METALS

A. BONDING OF TWO DISSIMILAR METALS MAY RESULT IN GALVANIC CORROSION. A REACTION THAT OCCURS AT THE JUNCTION OF THE DISSIMILAR METALS WHEN THEY ARE EXPOSED TO MOISTURE. THE DEGREE AND RATE OF CORROSION DEPENDS ON THE RELATIVE POSITION OF THE METALS IN THE ELECTROCHEMICAL SERIES. TO DETERMINE THE LIKELIHOOD OF TWO METALS REACTING REFERENCE SECTION 6.5.2 IN THE R56 SPECIFICATIONS.

1. THE SAME METAL SHALL BE USED THROUGHOUT THE SYSTEM WHEN POSSIBLE.

2. EXOTHERMICALLY WELD CONNECTIONS OF DIFFERENT METALS WHEN WELD MATERIAL IS AVAILABLE FOR THE METALS BEING BONDED.

3. COPPER CONDUCTORS SHALL NOT BE INSTALLED ON ALUMINUM ROOFING OR SIDING.

4. ALUMINUM AND COPPER SHALL NOT BE DIRECTLY CONNECTED TO EACH OTHER UNLESS USING EXOTHERMIC WELDING MATERIALS SPECIFICALLY INTENDED FOR THESE TWO METALS TO MAKE THE CONNECTION. ALUMINUM AND COPPER MAY BE JOINED WITH THE USE OF A LISTED BIMETALLIC TRANSITION CONNECTOR OF STAINLESS STEEL. THESE CONNECTORS SHALL BE LISTED FOR THE SIZE AND NUMBER OF CONDUCTORS AND MARKED WITH AL/CU. THESE CONNECTIONS SHALL BE LIBERALLY COATED WITH A CONDUCTIVE ANTIOXIDANT AT THE POINT OF INSERTION INTO THE CONNECTOR.

5. COPPER SHALL NOT COME IN CONTACT WITH GALVANIZED STEEL.

6. TINNED COPPER SHALL BE USED WHEN CONNECTING TO A GALVANIZED STEEL STRUCTURE.

ANTI-OXIDANT

A. ANTI-OXIDANT COMPOUND SHALL BE USED BETWEEN ALL EXTERNAL MECHANICAL CONNECTIONS. CARE SHALL BE TAKEN TO USE THE APPROPRIATE ANTI-OXIDANT TYPE. IN GENERAL, ZINC ANTI-OXIDANT (GRAY COLOR) SHALL BE USED WHEN CONNECTING TO GALVANIZED AND ALUMINUM OBJECTS AND COPPER ANTI-OXIDANT (COPPER COLOR) SHALL BE USED WHEN CONNECTING TO COPPER OBJECTS.

TEST PROCEDURE

A. THE GROUND SYSTEM RESISTANCE SHALL NOT EXCEED 5 OHMS. TESTING SHALL BE PERFORMED IN ACCORDANCE WITH MOTOROLA R56 SPECIFICATIONS (DATED SEPTEMBER 1, 2005).

1. CLAMP-ON RESISTANCE OR INDUCED FREQUENCY TESTS WITH CLAMP-ON GROUND RESISTANCE TESTER.

2. GROUNDING RESISTANCE FOR THE GROUNDING SYSTEM WILL BE 5 OHMS OR AS REQUIRED BY THE TELECOMMUNICATIONS EQUIPMENT MANUFACTURER(S), WHICHEVER IS LEAST.

B. GROUND TEST MUST BE PERFORMED PRIOR TO UTILITY CONNECTION AND GROUND CONNECTION TO EXISTING SITE COMMON GROUNDING ELECTRODE SYSTEM.

GROUNDING SYSTEMS

A. EXAMINATION: VERIFY THAT SURFACES ARE READY TO RECEIVE WORK AND THAT THE FIELD MEASUREMENTS ARE AS SHOWN ON SHOP DRAWINGS & R56 COMPLIANT.

B. INSTALLATION – INSTALL AS INDICATED ON THE DRAWINGS AND AS REQUIRED PER R56 REQUIREMENTS:

1. GROUNDING NETWORK SYSTEM SHALL INCLUDE ELECTRICAL TRENCHING, BACK FILL AND COMPACTION PER THIS SECTION; GROUNDING WIRE, GROUNDING ELECTRODES AND ALL NECESSARY MATERIALS AND LABOR REQUIRED TO COMPLETE THE SPECIFIED SYSTEM. PER R56 SPECS.

2. ALL GROUND CONNECTIONS SHALL CONFORM TO I.E.E.E. STD 837 AND/ OR UL467 PROTECTED FROM CORROSION AS NOTED ON DRAWINGS. USE EXOTHERMIC OR DOUBLE LUG FOR OUTDOORS ABOVE AND BELOW GRADE, INDOORS, AND ON ROOF INSTALLATIONS, AS INDICATED ON PLANS.

3. ALL CLAMP CONNECTIONS SHALL BE MADE ACCESSIBLE FOR INSPECTION. USE ONLY WHERE SPECIFIED.

4. ALL UNDERGROUND CONNECTIONS SHALL BE INSPECTED BY GENERAL DYNAMICS / MOTOROLA REPRESENTATIVES PRIOR TO BACK FILLING IF POSSIBLE WITHOUT DELAYING THE PROJECT SCHEDULE.

5. IF ROCK IS ENCOUNTERED, GROUND ROD SHALL BE INSTALLED IN A 2 INCH DIAMETER DRILLED HOLE TO THE REQUIRED DEPTH AND BACK FILLED WITH APPLICATIONS OF MAGNESIUM SULFATE OR COPPER SULFATE (IF XIT GROUNDING IS NOT USED).

6. GROUNDING WIRE SHALL NOT BEND LESS THAN 90° IN ANY LOCATION WITH A MINIMUM BEND RADIUS OF 8".

7. PROVIDE CORROSION PROOFING PAINT ON SURFACES EXPOSED DURING INSTALLATION.

8. ALL ABOVE GROUND CONNECTIONS SHALL BE BOLTED, CLAMP OR BURNDY CONNECTIONS UNLESS OTHERWISE NOTED. ALL BELOW GROUND CONNECTIONS SHALL BE EXOTHERMIC WELDED. PROVIDE CORROSION PROTECTION.

9. ALL GROUND CONNECTIONS TO THE GROUND BAR SHALL BE MADE WITH DOUBLE HOLE HYDRAULICALLY INDENTED LUGS, EXCEPT FOR TWO EXOTHERMIC WELDS, AS SHOWN ON PLANS.

10. WHERE GROUND CONNECTIONS ARE MADE, THE CONTACT POINTS ARE TO BE CLEANED AND MADE FREE OF FOREIGN MATERIALS, SUCH AS PAINT AND CORROSION, TO ENSURE AN ADEQUATE BOND.

11. MOTOROLA R-56 STANDARDS SHALL BE USED AS A GUIDELINE FOR GROUNDING, BONDING, INSTALLATION, AND CONNECTIONS.

12. ALL MECHANICAL GROUNDING CONNECTIONS MADE THROUGHOUT THESE DRAWINGS SHALL BE MADE WITH COPPER-SHIELD. THERE IS NO EQUIVALENT FOR THESE ANTI-OXIDATION COMPOUNDS. NO OTHER COMPOUND WILL BE ACCEPTED. COATED ALL WIRES BEFORE LUGGING. COAT ALL SURFACES BEFORE CONNECTING.

C. FIELD QUALITY CONTROL – FIELD INSPECTION AND TESTING WILL BE PERFORMED AS REQUIRED.

1. THE CONTRACTOR SHALL VERIFY THAT THE SYSTEM IS EFFECTIVELY GROUNDED, MEETS NEC ARTICLE 250 REQUIREMENTS, AND IS ACCEPTABLE TO THE LOCAL UTILITY AND LOCAL AUTHORITY HAVING JURISDICTION.

2. THE CONTRACTOR SHALL MAKE ALL MEASUREMENTS REQUIRED TO TEST THE GROUNDING NETWORK SYSTEM. SYSTEM SHALL BE TESTED AT THE TIME OF INSTALLATION.

3. THE GROUNDING NETWORK SYSTEM TEST PROCEDURE SHALL COMPLY WITH CLAMP-ON RESISTANCE OR INDUCED FREQUENCY TESTS WITH CLAMP-ON GROUND RESISTANCE TESTER, EXCEPT AS MODIFIED HEREIN.

4. CONTRACTOR SHALL VERIFY THE ADEQUACY OF THE INSTALLED SYSTEM. CONTRACTOR SHALL CONDUCT "SITE RESISTANCE TO EARTH GROUNDING TESTING" PER R-56 STANDARD. INSTALLED SYSTEM SHALL ACHIEVE A GROUND RESISTANCE OF LESS THAN 5 OHMS.

5. RECORD GROUND RESISTANCE TEST RESULTS ON GENERAL DYNAMICS / MOTOROLA "GROUND RESISTANCE TEST" FORM. DELIVERABLE TO GENERAL DYNAMICS.

6. TEST SHALL BE WITNESSED BY[redacted] IF POSSIBLE WITHOUT DELAYING THE PROJECT SCHEDULE.

7. COPIES OF THE TEST RESULTS SHALL BE SUBMITTED TO [redacted] REPRESENTATIVES AND ENGINEER.

8. WHEN USING OR CONNECTING TO AN EXISTING GROUND RING – TEST GROUND RING PRIOR TO AND AFTER CONNECTION TO THE EXISTING GROUND RING.

[redacted]

GROUNDING
GENERAL NOTES
G1

NOTE: ALL INFORMATION IS SUBJECT TO FIELD VERIFICATION. ALL INFORMATION IS CONFIDENTIAL AND NOT FOR PUBLIC DISTRIBUTION WITHOUT EXPRESS CONSENT OF THE LOS ANGELES REGIONAL INTEROPERABLE COMMUNICATIONS SYSTEMS AUTHORITY.

Underground Service Alert

Call: TOLL FREE
1-800
422-4133
TWO WORKING DAYS BEFORE YOU DIG

NOTIFY DIG-ALERT OR PRIVATE LOCATING COMPANY PRIOR TO ANY EXCAVATING OR TRENCHING

LA-RICS
Los Angeles Regional Interoperable Communications System

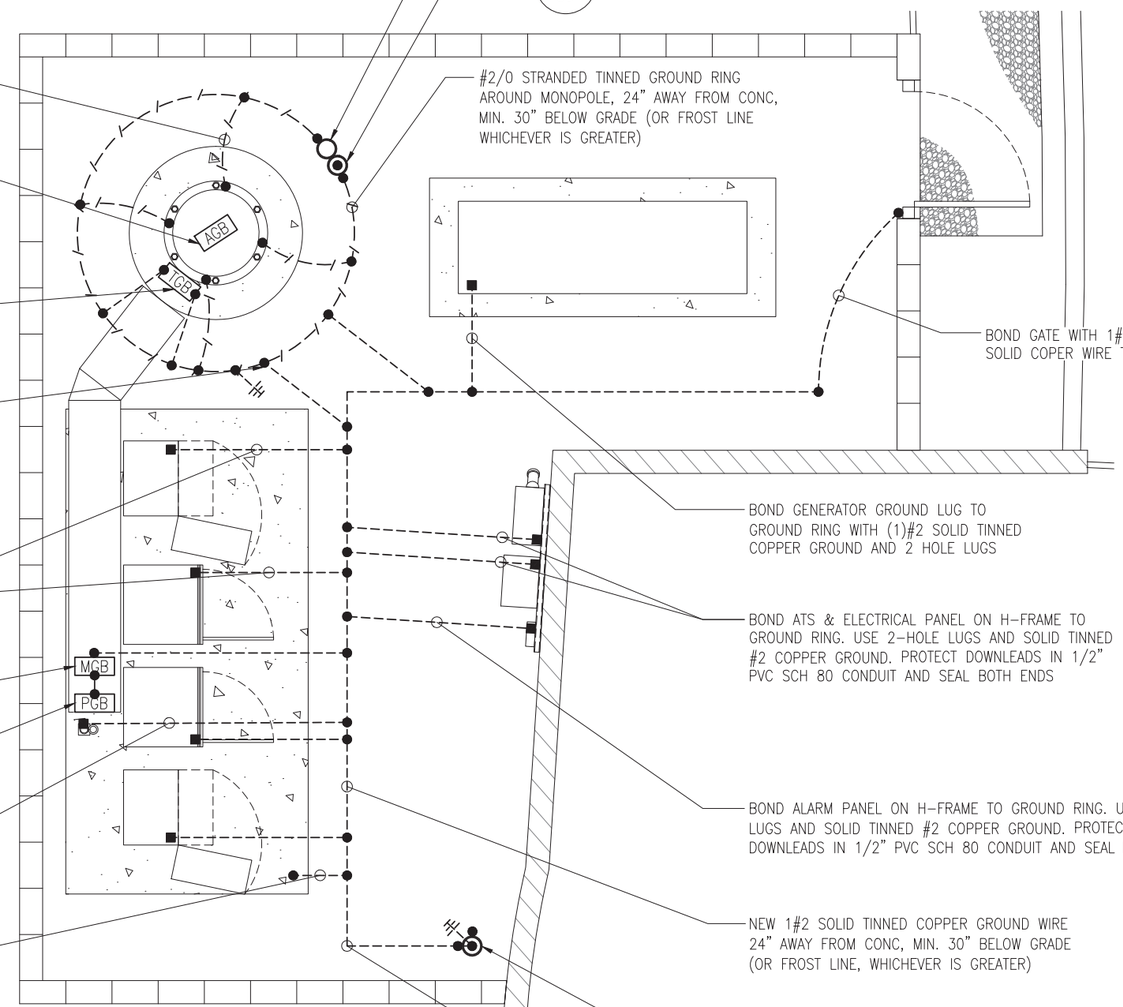

NEW INSPECTION WELL

NEW XIT 03/G3

BOND MONOPOLE TO GROUND RING WITH #2/0 STRANDED TINNED COPPER GROUND (TYP. 4 LOCATIONS, EVENLY SPACED)

#2/0 STRANDED TINNED GROUND RING AROUND MONOPOLE, 24" AWAY FROM CONC, MIN. 30" BELOW GRADE (OR FROST LINE WHICHEVER IS GREATER)

NEW ANTENNA GROUND BARS WITH NO STANDOFF INSULATORS, BOND COAX GROUND KIT DOWNLEADS TO THE GROUNDING BAR MOUNTED AT EACH ANTENNA SECTOR

MOUNT TGB ON LOWER PORTION OF MONOPOLE AT COAX TRAY. MOUNT TGB DIRECTLY TO MONOPOLE WITH NO STANDOFF INSULATORS. EXOTHERMIC WELD TGB TO GROUND RING WITH 2#2 SOLID TINNED COPPER WIRE INSTALL COAX GROUND KITS AND BOND TO TGB.

BOND GATE WITH 1#2 AWG TINNED SOLID COPER WIRE TO GROUND RING 04/G3

MONOPOLE GROUND RING AND EQUIPMENT GROUND RING SHALL BE BONDED TOGETHER IN (2) LOCATIONS USING #2 SOLID TINNED COPPER GROUND.

BOND GENERATOR GROUND LUG TO GROUND RING WITH (1)#2 SOLID TINNED COPPER GROUND AND 2 HOLE LUGS

BOND EACH OUT-DOOR EQUIPMENT CABINET MECHANICALLY TO GROUND RING WITH 1#2 SOLID TINNED COPPER GROUND. PROTECT DOWNLEADS IN 1/2" PVC SCH 80 CONDUIT AND SEAL BOTH ENDS

BOND ATS & ELECTRICAL PANEL ON H-FRAME TO GROUND RING. USE 2-HOLE LUGS AND SOLID TINNED #2 COPPER GROUND. PROTECT DOWNLEADS IN 1/2" PVC SCH 80 CONDUIT AND SEAL BOTH ENDS

MASTER GROUND BAR INSIDE CABLE TRAY. GROUND BAR EXOTHERMICALLY CONNECTED TO GROUND RING

POLYPHASERS GROUND BAR INSIDE CABLE TRAY. COAX GROUND KITS ONLY COME WITH #6 AWG GROUND WIRE

BOND ALARM PANEL ON H-FRAME TO GROUND RING. USE 2-HOLE LUGS AND SOLID TINNED #2 COPPER GROUND. PROTECT DOWNLEADS IN 1/2" PVC SCH 80 CONDUIT AND SEAL BOTH ENDS

BOND GPS MAST TO THE GROUND RING USING 1#2 SOLID TINNED GROUND, PROTECT IN 1/2" PVC SCH 80 CONDUIT AND SEAL BOTH ENDS WITH SILICON

NEW 1#2 SOLID TINNED COPPER GROUND WIRE 24" AWAY FROM CONC, MIN. 30" BELOW GRADE (OR FROST LINE, WHICHEVER IS GREATER)

BOND 1#2 AWG TINNED COPPER WIRE FROM REBAR TO GROUND RING (GROUND WIRE TO BE IN PVC CONDUIT SLEEVE INTO CONCRETE) 02/G4

COPPERCLAD STEEL GROUND ROD DRIVEN FULL LENGTH INTO GROUND (TYP.)

#2 SOLID TINNED GROUND RING, 24" AWAY FROM CONC, MIN. 30" BELOW GRADE (OR FROST LINE WHICHEVER IS GREATER)

LEGEND

- EXOTHERMIC WELD
- MECHANICAL CONNECTION
- XIT
- INSPECTION WELL
- 5/8" x 10'-0" GROUND ROD
- #2 TINNED SOLID BARE COPPER GROUND WIRE
- #2/0 STRANDED TINNED GROUND WIRE

01 **EXTERIOR GROUNDING PLAN**
SCALE: 1/2"=1'-0"

2' 0 2'
SCALE: 1/2"= 1'-0"

EXTERIOR
GROUNDING PLAN
G2

[redacted]

NOTE: ALL INFORMATION IS SUBJECT TO FIELD VERIFICATION. ALL INFORMATION IS CONFIDENTIAL AND NOT FOR PUBLIC DISTRIBUTION WITHOUT EXPRESS CONSENT OF THE LOS ANGELES REGIONAL INTEROPERABLE COMMUNICATIONS SYSTEMS AUTHORITY.

NOTE: ALL INFORMATION IS SUBJECT TO FIELD VERIFICATION. ALL INFORMATION IS CONFIDENTIAL AND NOT FOR PUBLIC DISTRIBUTION WITHOUT EXPRESS CONSENT OF THE LOS ANGELES REGIONAL INTEROPERABLE COMMUNICATIONS SYSTEMS AUTHORITY.

LA-RICS
Los Angeles Regional Interoperable Communications System

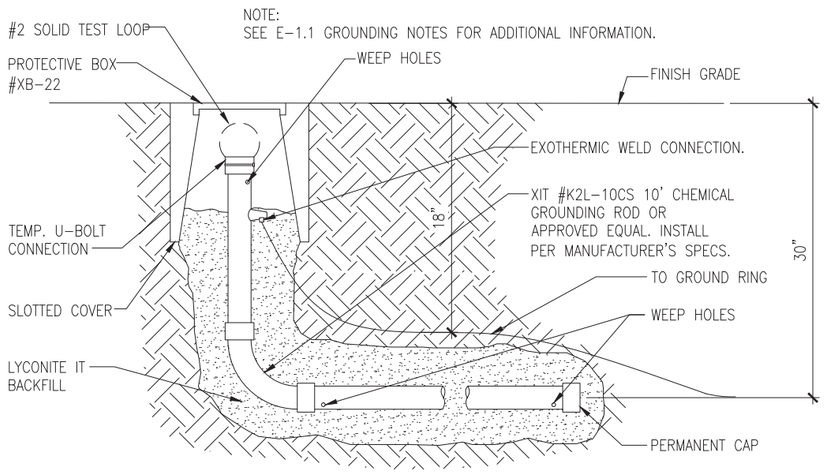

03 **XIT DETAIL**
SCALE: NTS

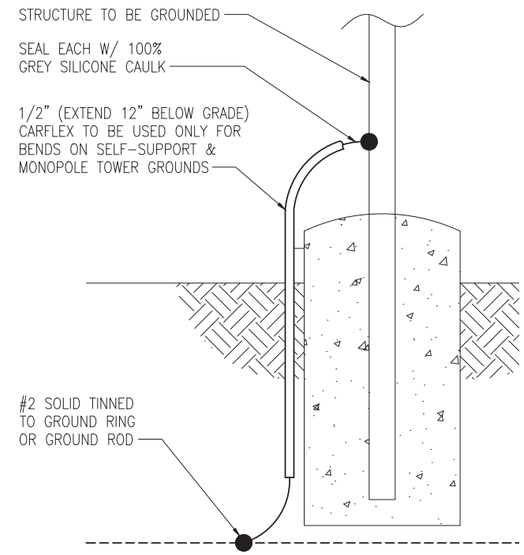

NOTE: CONDUIT SHALL BE PROPERLY CAPPED AND SEALED AT ENDS

02 **GROUND WIRE PROTECTION**
SCALE: NTS

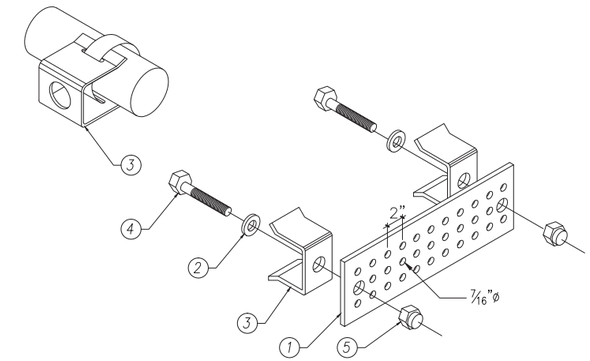

1. TINNED COPPER GROUND BAR PLATE, 1/4"x4"x12". HOLE CENTERS TO MATCH NEMA DOUBLE LUG CONFIGURATION. APPLY ANTI-OXIDATION COMPOUND.
2. 5/8" LOCK WASHERS
3. STANDOFF ADAPTER
4. CONNECTION BOLT
5. LOCK NUT (OR NUT WITH FLAT & LOCK WASHERS)

01 **GROUND BAR W/O INSULATORS**
SCALE: NTS

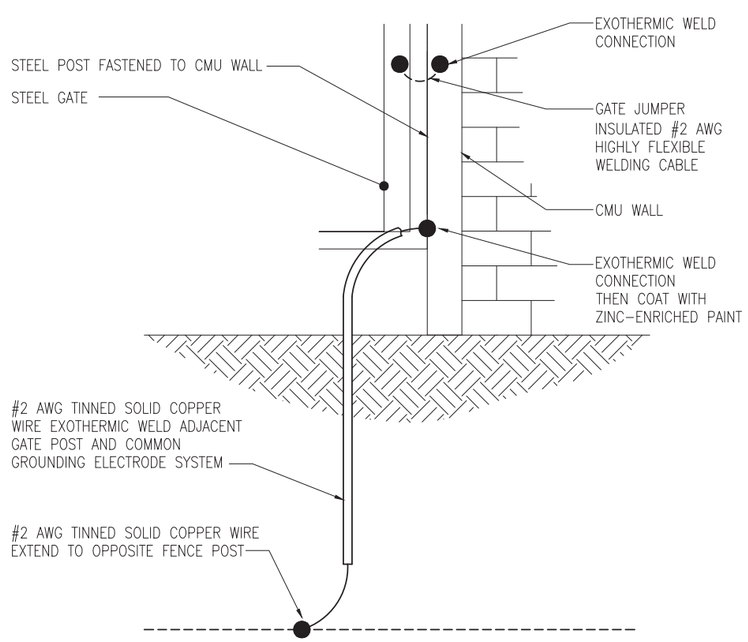

04 **GATE GROUNDING DETAIL**
SCALE: NTS

NOTES:
1. CONTRACTOR TO APPLY ANTI-OXIDATION COMPOUND.
2. GROUND BAR SHALL BE SIZED TO ACCOMMODATE ALL GROUNDING CONNECTION REQUIRED.
3. CLEAN ATTACHMENT POINTS TO REMOVE PAINT.
4. ALL GROUND BARS TO BE TINNED

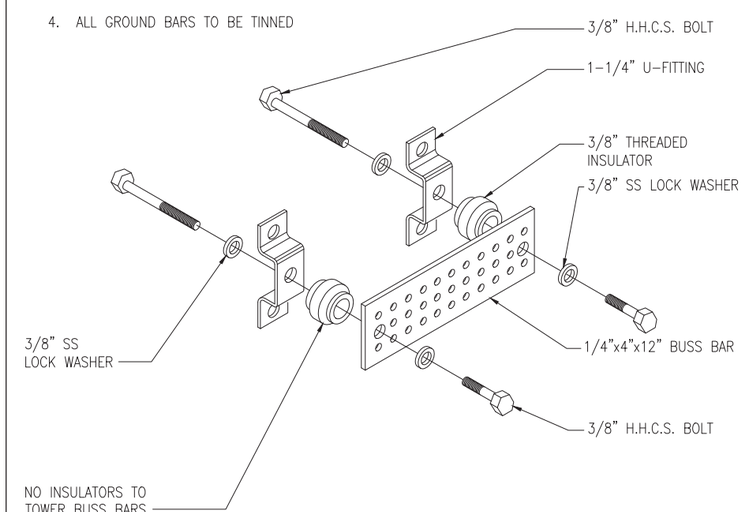

04 **GROUND BAR WITH INSULATORS**
SCALE: NTS

GROUNDING DETAILS
G3

NOTE: ALL INFORMATION IS SUBJECT TO FIELD VERIFICATION. ALL INFORMATION IS CONFIDENTIAL AND NOT FOR PUBLIC DISTRIBUTION WITHOUT EXPRESS CONSENT OF THE LOS ANGELES REGIONAL INTEROPERABLE COMMUNICATIONS SYSTEM AUTHORITY.

LA-RICS
Los Angeles Regional Interoperable Communications System

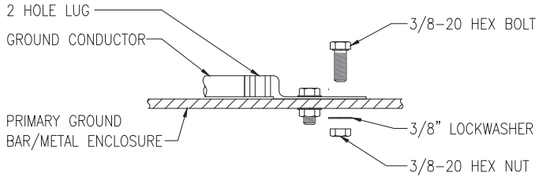

INSTALLATION NOTES:

1. SELECT BOLT LENGTH TO PROVIDE A MINIMUM OF TWO EXPOSED THREADS
2. BURNISH MOUNTING SURFACE TO REMOVE PAINT IN THE AREA OF LUG CONTACT
3. APPLY ANTI-OXIDANT OMFOUND TO MATING SURFACE OF LUG AND WIRE CLEAN EXCESS COMPOUND
4. USE SOLID COPPER WIRE AND MECHANICAL 2-HOLE LUG WITH STAINLESS STEEL HARDWARE FOR ALL EXTERIOR GROUNDING

Universal Two-Hole Lugs with Sight Holes — A valmont COMPANY

Features: Longer barrel lengths than many other brands. Chamfered ends allow easy wire insertion. Color coded.

Construction: Tin plated copper.

Design Criteria: Universal hole design allows 0.75" - 1" spacing. UL listed with inspection windows.

Part #	Gauge	Stud Size	Hole Spacing	Color	Barrel Length	Weight
HLU6	6	3/8"	0.75" - 1"	Blue	Long	0.05 lb.
HLU2S	2 Solid	3/8"	0.75" - 1"	White	Long	0.05 lb.
HLU2	2	3/8"	0.75" - 1"	Brown	Long	0.05 lb.

04 GND CONN. DETAIL
SCALE: NTS

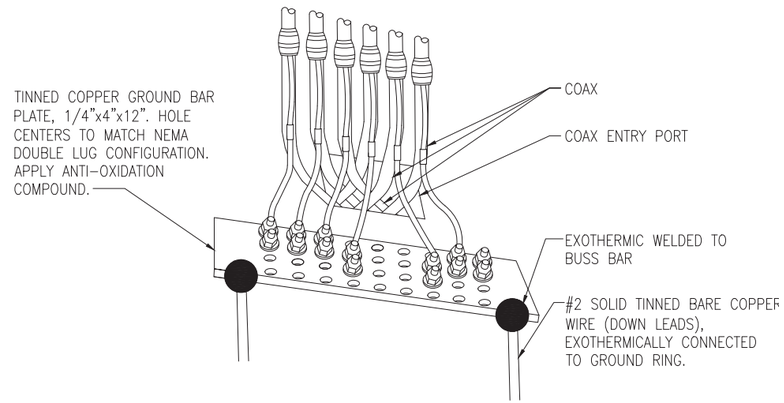

NOTE:
1. GROUND BAR TO BE INSTALLED WITHIN 30" ABOVE THE TOP OF THE ICE BRIDGE.
2. ANTENNA GROUND BAR W/ INSULATORS MECHANICALLY CLAMPED TO TOWER STEEL WITH STAINLESS STEEL HARDWARE. CHEMICALLY REMOVE PAINT AND APPLY ANTI-OXIDATION COMPOUND PRIOR TO CLAMPING TO TOWER.
3. TORQUE HARDWARE TO 12 FT.-LBS.

03 LOWER MONOPOLE COAX GROUND BAR DETAIL
SCALE: NTS

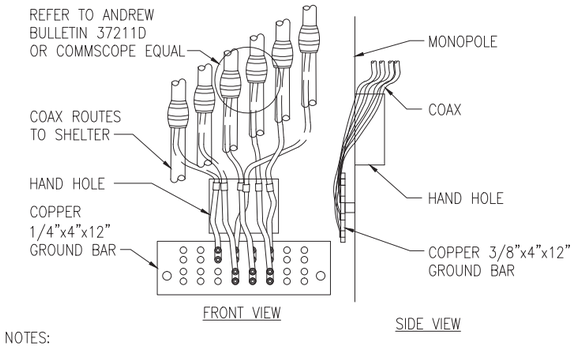

NOTES:
1. GROUND BARS REQUIRED EVERY 100 FT. MAXIMUM.
2. ANTENNA GROUND BAR SHALL BE MECHANICALLY CLAMPED DIRECTLY TO THE MONOPOLE STEEL WITH STAINLESS STEEL HARDWARE. CHEMICALLY REMOVE PAINT AND APPLY ANTI-OXIDATION COMPOUND OR APPROVED EQUAL PRIOR CLAMPING TO INSIDE OF MONOPOLE TOWER.
3. TORQUE HARDWARE TO 12 FT-LBS

01 TYP. COAX GROUND BAR DETAIL
SCALE: NTS

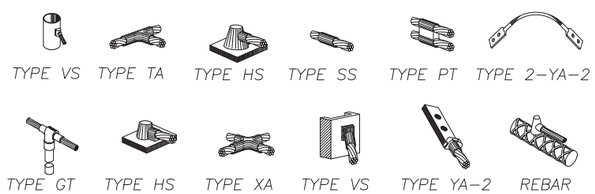

02 EXOTHERMIC WELD
SCALE: NTS

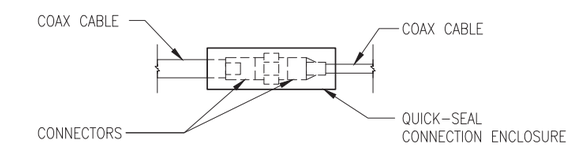

VALMONT WEATHERPROOFING QUICK-SEAL CONNECTION ENCLOSURES	
PART #	APPLICATION
D32473	7/8" TO 1/2" CONNECTION
C79091	1-1/4" TO 1/2" CONNECTION
E97072	1-5/8" TO 1/2" CONNECTION
D80635	1/2" TO ANTENNA (LONG 6")

07 WEATHER PROOFING CONNECTION
SCALE: NTS

FIRST LAYER: 3M 33+ BLACK TAPE #054007-06132 (OR APPROVED EQUAL). THIS LAYER OF TAPE IS WRAPPED STARTING FROM THE MIDDLE OF THE CONNECTORS OUTWARD TO ONE END GOING 1.5"-2.0" BEYOND THE CONNECTOR, THEN BACK TO THE OPPOSITE END AGAIN GOING 1.5" - 2.0" BEYOND THE CONNECTOR, AND THEN BACK TO THE MIDDLE IN ONE CONTINUOUS WRAP, OVERLAPPING EACH WRAP BY 1/4". BEFORE CUTTING THE TAPE, OVERLAP SEVERAL WRAPS AT THE MIDDLE OF THE CONNECTOR. THIS TAPE SHOULD BE WRAPPED IN THE OPPOSITE DIRECTION OF HOW THE CONNECTOR IS TIGHTENED.

SECOND LAYER: DECIBEL PRODUCTS VAPOR WRAP #DB11316 (OR APPROVED EQUAL). THIS LAYER OF BUTYL TAPE IS WRAPPED AROUND THE FIRST LAYER OF BLACK TAPE. REPEAT THE TAPING PROCESS FOR THE FIRST LAYER USING VAPOR WRAP AND OVERLAP EACH END OF THE PREVIOUS LAYER OF BLACK TAPE BY 1." USE AT MINIMUM OF 2" OF VAPOR WRAP TO COVER METAL GROUND LEAD NEAR CLAMP LOCATIONS.

THIRD LAYER: 3M 33+ BLACK TAPE #054007-06132 (OR APPROVED EQUAL). THIS LAYER OF TAPE IS WRAPPED AROUND THE SECOND LAYER OF VAPOR WRAP. REPEAT THE TAPING PROCESS FOR THE FIRST LAYER USING BLACK TAPE AND OVERLAP EACH END OF THE PREVIOUS LAYER OF VAPOR WRAP BY 1."

05 COAX CABLE GROUNDING WEATHERPROOFING
SCALE: NTS

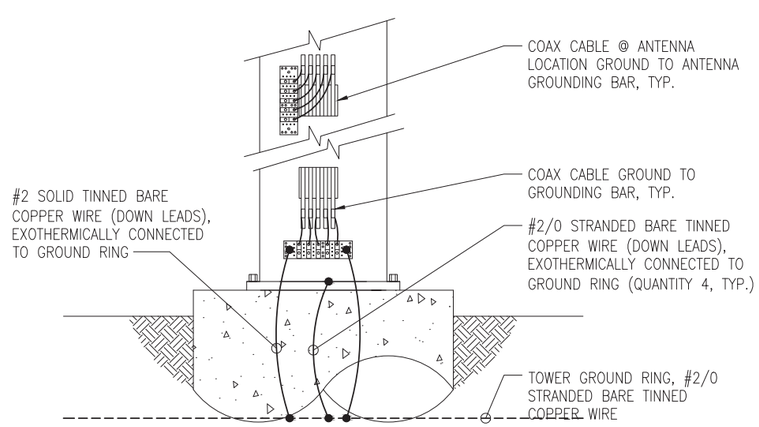

06 MONOPOLE GROUNDING DETAIL
SCALE: NTS

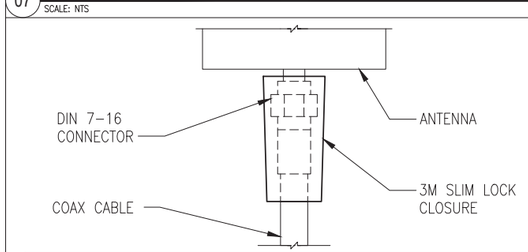

VALMONT WEATHERPROOFING 3M SLIM LOCK CLOSURE	
PART #	APPLICATION
SLC-716	WEATHERPROOF DIN 7-16 & 1/2" COAX CONNECTION

08 WEATHER PROOFING CONNECTION AT ANTENNA
SCALE: NTS

EQUIPMENT GROUNDING SYSTEM

ATTACHMENT 1.1 - COLLOCATION EXAMPLE

NOTICE: ALL PARTS ARE TO BE INVENTORIED AND ANY SHORTAGES REPORTED WITHIN 48 HOURS OF DELIVERY. SHORTAGES REPORTED AFTER THIS TIME PERIOD WILL BE CHARGED TO THE CONTRACTOR.

CALL 800/369-6690 ASK FOR THE CONTRACTS DEPARTMENT

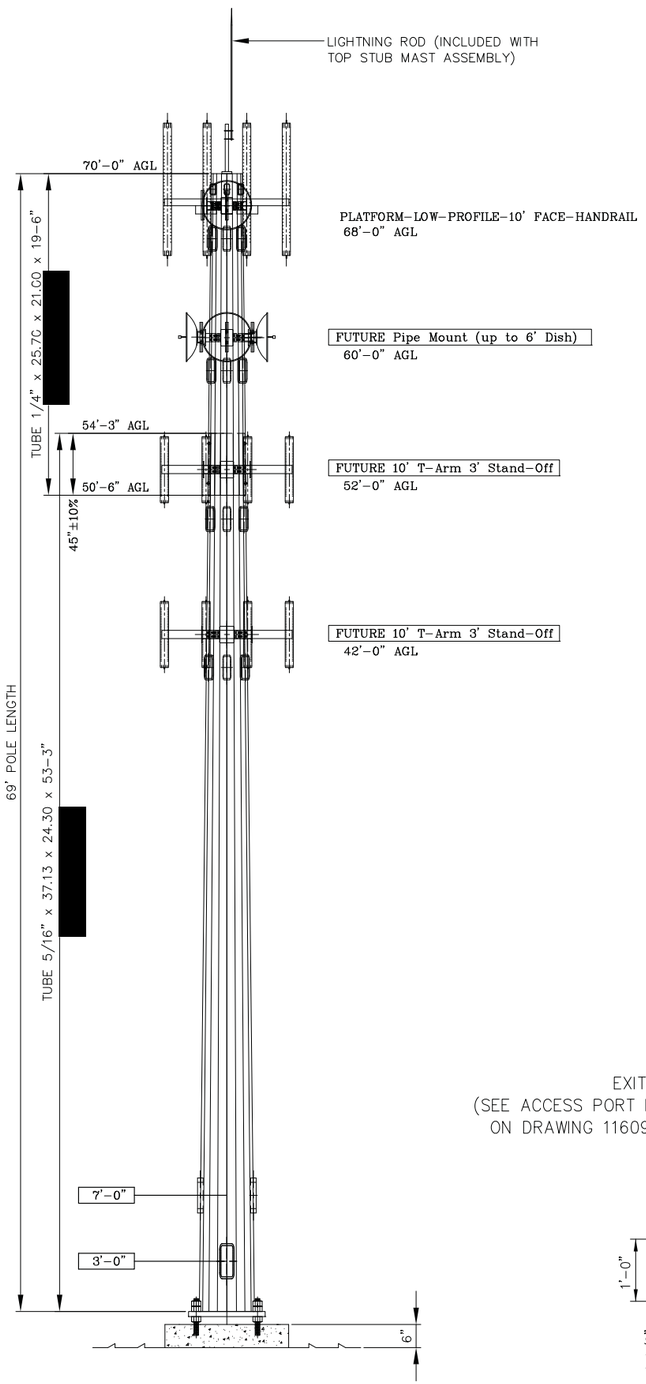

POLE ELEVATION

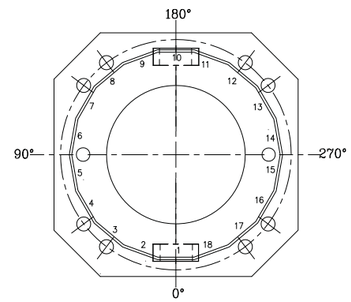

ACCESS PORT @ 3'-0"
ORIENT POLE IN THE FIELD TO SUIT

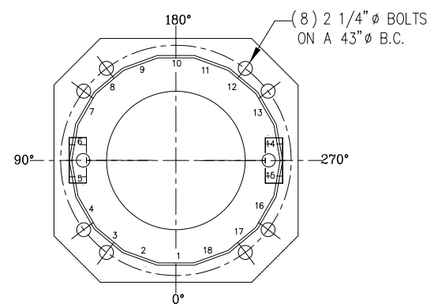

ACCESS PORT @ 7'-0"
ORIENT POLE IN THE FIELD TO SUIT

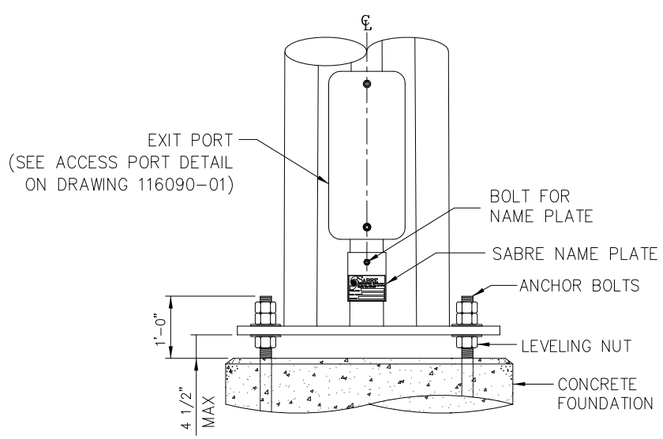

BASE INSTALLATION

[redacted]

DRAWING LIST

MONOPOLE ERECTION
MONOPOLE FOUNDATION(S)
MONOPOLE FABRICATION
MOUNTS: TRI-COLLAR
10' LP PLATFORM WITH HANDRAIL

MONOPOLE TOP STUB MAST ASSEMBLY
BILL OF MATERIALS

[redacted]

[redacted]

BOLT INSTALLATION DETAILS

1. INSTALLATION OF BOLTS: BOLTS FOR TOWERS AND ANTENNAS SHALL BE INSTALLED WITH THE NUTS FACING TO THE OUTSIDE AND/OR TO THE TOP OF THE TOWER, UNLESS PROHIBITED BY LACK OF CLEARANCE.
2. TIGHTENING OF BOLTS: ALL HIGH STRENGTH BOLTS SHALL BE TIGHTENED TO A SNUG-TIGHT CONDITION, AS DEFINED BY AISC.
3. NUT LOCKING DEVICE: ALL NUTS SHALL BE EQUIPPED WITH SOME TYPE OF NUT LOCKING DEVICE. SEE THE INDIVIDUAL DRAWINGS FOR THE TYPE OF NUT LOCKING DEVICE TO BE USED FOR EACH INDIVIDUAL APPLICATION.

UNLESS OTHERWISE SPECIFIED ALL DIMENSIONS INCLUDE FINISHES AND ARE IN INCHES

TOLERANCES: FRACTIONS ± 1/16"
ANGLES ± 1/2 DEG.
DECIMALS ± .010"

MATERIAL:

TOLERANCES DO NOT APPLY TO RAW MATERIAL

Rev	DATE	DRW	CHK	DESCRIPTION

[redacted]

CONFIDENTIAL
This Document and the information contained herein is the confidential trade secret property of Sabre Communication Corporation ("Sabre") and must not be reproduced, copied or used, in whole or in part, for any purpose without the prior written consent of Sabre. ©2014 Sabre Communications Corporation. All rights reserved.

[redacted]

70.00 MONOPOLE

JOB	[redacted]	SIZE	DRAWING NO.	REV
DATE		D	[redacted]	0
DRAWN B			SCALE	PAGE
CHECKED			NTS	1 OF 2

AGENDA [redacted] H [redacted] LOSURE

SPECIAL INSTRUCTIONS

BASED ON CHAPTER 17 OF THE 2013 CALIFORNIA BUILDING CODE, THE FOLLOWING SPECIAL INSTRUCTIONS ARE REQUIRED, FOR THE MONOPOLE AND FOUNDATION:

- FIELD SPECIAL INSPECTORS MUST BE L.A. COUNTY CERTIFIED
- INSPECT REINFORCING STEEL AND PLACEMENT (PERIODIC)
- INSPECT BOLTS TO BE INSTALLED IN CONCRETE, PRIOR TO AND DURING PLACEMENT OF CONCRETE (CONTINUOUS)
- VERIFY USE OF REQUIRED DESIGN MIX (PERIODIC)
- AT THE TIME FRESH CONCRETE IS SAMPLED TO FABRICATE SPECIMENS FOR STRENGTH TESTS – MINIMUM 4000 PSI, PERFORM SLUMP AND AIR CONTENT TESTS, AND DETERMINE THE TEMPERATURE OF THE CONCRETE (CONTINUOUS)
- INSPECT CONCRETE PLACEMENT FOR PROPER APPLICATION TECHNIQUES (CONTINUOUS)
- INSPECT FOR MAINTENANCE OF SPECIFIED CURING TEMPERATURE AND TECHNIQUES (CONTINUOUS)
- OBSERVE DRILLING OPERATIONS AND MAINTAIN COMPLETE AND ACCURATE RECORDS (CONTINUOUS)
- VERIFY PLACEMENT LOCATION AND PLUMBNESS, CONFIRM ELEMENT DIAMETER AND LENGTH. RECORD CONCRETE VOLUME (CONTINUOUS)
- INSPECT HIGH-STRENGTH BOLTING (PERIODIC) ALL STRUCTURAL BOLTS MAY BE TIGHTENED TO SNUG-TIGHT CONDITION, AS DEFINED BY AISC.

SABRE IS A CITY OF LOS ANGELES APPROVED FABRICATOR #1795. THEREFORE, SPECIAL INSPECTIONS OF THE FABRICATION ARE NOT REQUIRED.

POLE DESIGN INFORMATION

THE MONOPOLE WAS DESIGNED FOR A BASIC WIND SPEED OF 125 MPH WITH 0" OF RADIAL ICE, AND 30 MPH WITH 1 1/2" OF RADIAL ICE, IN ACCORDANCE WITH ANSI/TIA-222-G-2 (2009), STRUCTURE CLASS III, EXPOSURE CATEGORY C, TOPOGRAPHIC CATEGORY 1.

THE TOWER MEETS THE REQUIREMENTS FOR AN ULTIMATE WIND SPEED OF 115 MPH (RISK CATEGORY IV), IN ACCORDANCE WITH THE 2013 CALIFORNIA BUILDING CODE.

THE USE OF ROLLED STEEL SECTIONS AND/OR BOLTS MANUFACTURED OUTSIDE THE UNITED STATES WILL REQUIRE VERIFICATION THAT THE PRODUCTS COMPLY WITH APPLICABLE ASTM STANDARDS. MILL CERTIFICATES WILL BE REQUIRED FOR ALL STEEL. STEEL GRADES OTHER THAN ASTM-A36 WILL REQUIRE TESTING BY AN APPROVED LABORATORY. ALL FOREIGN BOLTS MUST BE APPROVED BY COUNTY OF LOS ANGELES BUILDING AND SAFETY PRIOR TO THEIR USE.

SEISMIC PARAMETERS

BASED ON THE 2013 CALIFORNIA BUILDING CODE AND THE GEOTECHNICAL REPORT BY AESCO, PROJECT NO. 20141695-D1603, DATED DECEMBER 10, 2014:

- SITE CLASS = D
- SEISMIC RISK CATEGORY = IV
- S_s = 2.315g
- S_1 = 1.083g
- S_{MS} = 2.315g
- S_{M1} = 1.624g
- S_{DS} = 1.544g
- S_{D1} = 1.083g
- SEISMIC DESIGN CATEGORY = F

[redacted]

[redacted]

[redacted]

70.00 MONOPOLE

UNLESS OTHERWISE SPECIFIED
ALL DIMENSIONS INCLUDE
FINISHES AND ARE IN INCHES

TOLERANCES: FRACTIONS ± 1/16"
ANGLES ± 1/2 DEG.
DECIMALS ± .010"

MATERIAL:

TOLERANCES DO NOT APPLY TO RAW MATERIAL

Rev	DATE	DRW	CHK	DESCRIPTION

CONFIDENTIAL
This Document and the information contained herein is the confidential trade secret property of Sabre Communication Corporation ("Sabre") and must not be reproduced, copied or used, in whole or in part, for any purpose without the prior written consent of Sabre. ©2014 Sabre Communications Corporation. All rights reserved.

JOB [redacted]	SIZE D	DRAWING NO [redacted]	REV 0
DATE			
DRAWN B		SCALE	PAGE 2 OF 2
CHECKED			

*45° SPACING FROM CENTERLINE OF PIER TO THE CENTERLINE OF BOLT CLUSTER.

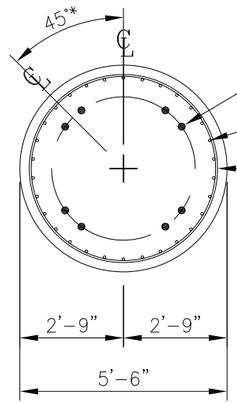

(8) – ANCHOR BOLTS 2 1/4"ø X 7'-0" (#18J A615 GR. 75 OR EQUAL) ON A 43"ø B.C.

(30) #7 VERTICAL REBAR EVENLY SPACED

(32) #5 HORIZONTAL TIES @ 10" C/C WITH TWO (2) WITHIN TOP 5" OF CONCRETE

TOP & BOTTOM TEMPLATES
PART NO.: 116090-9001

PLAN VIEW

(8) – ANCHOR BOLTS 2 1/4"ø X 7'-0" (#18J A615 GR. 75 OR EQUAL) W/(5) GALV. HHN & (2) GALV. FW. EACH AT TOP

TEMPLATE

(32) #5 HORIZONTAL TIES @ 10" C/C WITH TWO (2) WITHIN TOP 5" OF CONCRETE

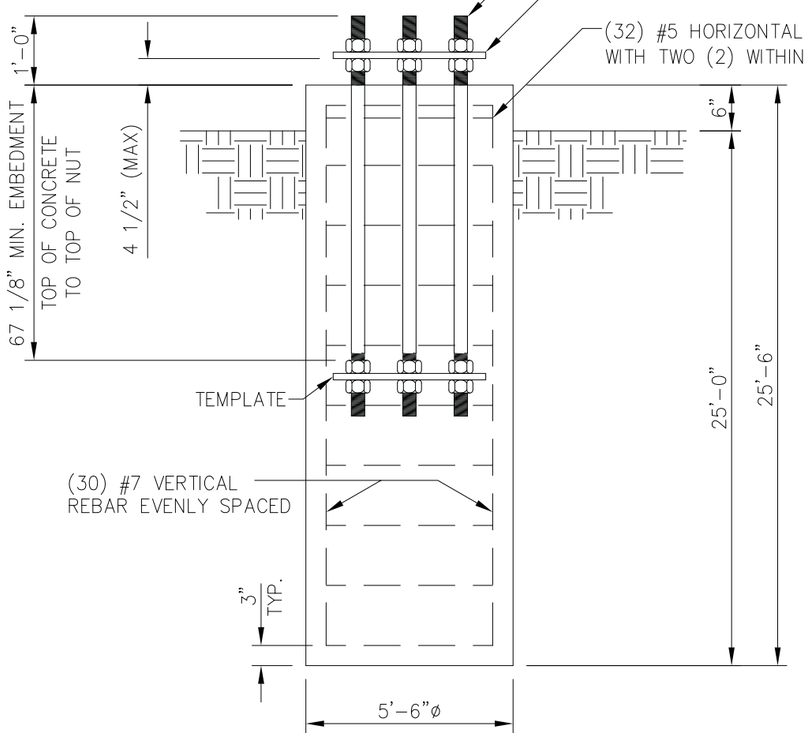

ELEVATION VIEW

[redacted]

REINFORCING STEEL SCHEDULE							
LOCATION	NO REQ'D.	BAR SPC'G.	SIZE	CUT LGTH.	TOTAL LGTH.	TOTAL WT.	SHAPE
PIER VERTICAL REINFORCING	30	NOTED ON DWG.	#7	25'-0"	750'-0"	1534 LBS.	STRAIGHT
PIER TIES	32	NOTED ON DWG.	#5	17'-2"	549'-4"	573 LBS.	5'-0" O.D.
					TOTAL REBAR WT.	2107 LBS.	

SEISMIC PARAMETERS

BASED ON THE 2013 CALIFORNIA BUILDING CODE AND THE GEOTECHNICAL REPORT BY AESCO, PROJECT NO. 20141695-D1603, DATED DECEMBER 10, 2014:

- SITE CLASS = D
- SEISMIC RISK CATEGORY = IV
- S_S = 2.315g
- S_1 = 1.083g
- S_{MS} = 2.315g
- S_{M1} = 1.624g
- S_{DS} = 1.544g
- S_{D1} = 1.083g
- SEISMIC DESIGN CATEGORY = F

PIER TIES TO HAVE 5 3/4" HOOK AS SHOWN

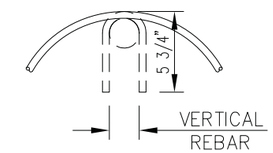

PIER TIE HOOK DETAIL

GENERAL NOTES:

1. ALL VERTICAL REINFORCING BARS ARE TO BE SECURELY TIED BEFORE CONCRETE IS PLACED.
2. THE GROUND ELEVATION SHALL BE A MAXIMUM OF 6" BELOW THE TOP OF THE PIER.
3. ALL EXPOSED CONCRETE CORNERS ARE TO BE CHAMFERED 3/4 INCH.
4. ALL REINFORCING STEEL SHALL CONFORM TO ASTM A615 GRADE 60 DEFORMED BARS.
5. CONCRETE SHALL HAVE A MINIMUM 28 DAY COMPRESSIVE STRENGTH OF 4000 PSI, IN ACCORDANCE WITH ACI 318-11.
6. REINFORCING STEEL TO HAVE A 3" MINIMUM CONCRETE COVER.
7. FOUNDATION DESIGN IS BASED ON THE GEOTECHNICAL REPORT BY AESCO, PROJECT NO. 20141695-D1603, DATED DECEMBER 10, 2014.
8. ANCHOR BOLTS 2 1/4" X 7'-0" #18J A615 GR. 75 OR EQUAL ON A 43"ø BOLT CIRCLE (8 REQ'D).
9. CONCRETE REQUIRED 22.44 CUBIC YARDS.
10. SEE THE GEOTECHNICAL REPORT FOR DRILLED PIER INSTALLATION REQUIREMENTS, IF SPECIFIED.
11. THE FOUNDATION IS BASED ON THE FOLLOWING FACTORED LOADS:
    MOMENT (KIP-FT) = 1469.17
    AXIAL (KIPS) = 17.77
    SHEAR (KIPS) = 28.45
12. FOUNDATION EXCAVATIONS MUST BE INSPECTED AND APPROVED BY THE GEOTECHNICAL CONSULTANT(S) PRIOR TO THE PLACING OF STEEL OR CONCRETE.

UNLESS OTHERWISE SPECIFIED ALL DIMENSIONS INCLUDE FINISHES AND ARE IN INCHES

TOLERANCES: FRACTIONS ± 1/16"
ANGLES ± 1/2 DEG.
DECIMALS ± .010"

MATERIAL: [redacted]

TOLERANCES DO NOT APPLY TO RAW MATERIAL

REV	DATE	DRW	CHK	DESCRIPTION

CONFIDENTIAL
This document and the information contained herein is the confidential trade secret property of Sabre Communications Corporation ("Sabre") and must not be reproduced, copied or used, in whole or in part, for any purpose without the prior written consent of Sabre.
© 2015 Sabre Communications Corporation. All rights reserved.

[redacted]

70.00 MONOPOLE

[redacted]	SIZE	DRAWING NO.	REV
DATE [redacted]	D	[redacted]	0
DRAWN BY [redacted]		SCALE	PAGE
CHECKED BY		None	1 OF 1

ATTACHMENT 1.1 - COLLOCATION EXAMPLE

(ft'-in") = BOTTOM OF SECTION TO STAND OFF BRACKET
(ft'-in") = C-LINE OF BUSS BAR LUG

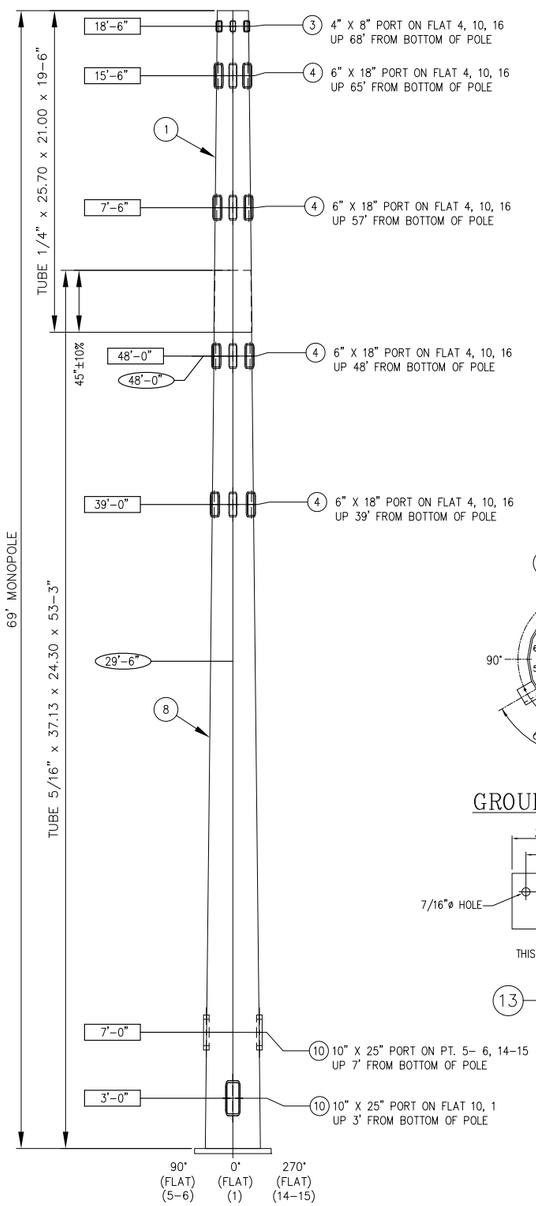

POLE ELEVATION

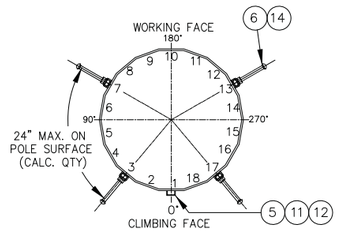

- CLIMBING SYSTEM IS CENTERED ON FACE 1 STARTING AT 15" BELOW TOP TO 10'-0" FROM BASE WITH 15" ALTERNATE SPACING.
- WORKING STEP CLIPS ARE PLACED AT THE NEAREST CLIMBING STEP LEVEL DOWN 72" FROM THE APPURTENANCE CENTER LINE SPACED ON THE CIRCUMFERENCE AT A DISTANCE NOT TO EXCEED 24" ON CENTER.
- SAFETY CLIMB SYSTEM IS CENTERED ON FACE 1.
- TOP STAND OFF BRACKET IS 12" FROM THE TOP.
- INTERMEDIATE STAND OFF BRACKETS ARE SPACED AT 27' MAX.
- BOTTOM STAND OFF BRACKET IS 10'-0" FROM THE BASE.

CLIMBING AND SAFETY DETAILS

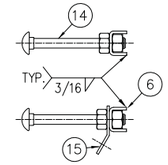

STEP BOLTS
CLIP & TIE-OFF

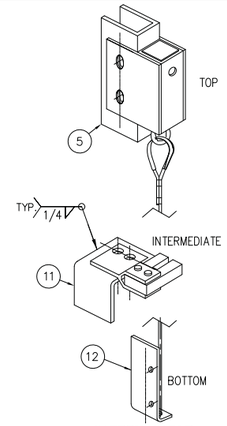

SAFETY CABLE

SAFETY CLIMB NOTE:
BOTTOM SAFETY CLIMB BRACKET MUST HAVE DOUBLE HOLES AWAY FROM THE POLE FOR USE WITH SAFETY CLIMB KIT PROVIDED.

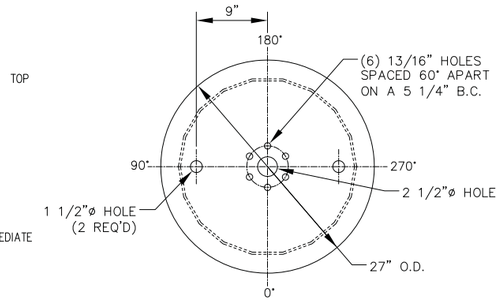

2 FLANGE PLATE DETAIL

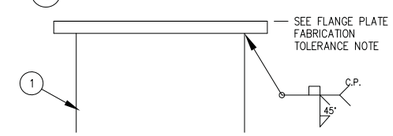

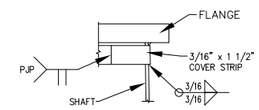

GALVANIZED FLANGE PLATE WELD DETAIL

FLANGE PLATE FABRICATION TOLERANCE NOTE

FLANGE PLATES ARE TO BE WELDED PERPENDICULAR TO THE AXIS OF THE POLE TO WITHIN (+) OR (-) 1/8 DEGREE

18-SIDED POLE			BILL OF MATERIAL		TAPER= .2410 IN/FT
ITEM	QTY	MARK NO.	DESCRIPTION	MATERIAL	WEIGHT
1	1	116090-0110	TUBE 1/4" x 25.70 x 21.00 x 19-6"	A572-65	1216
2	1	116090-5003	TOP FLANGE PLATE 1 1/2" X 27" O.D.	A-36	240
3	3	C30138120	Access Port (4" x 8" x 3-1/2" x 1/2") with 2 kellum hooks	A-500-C	35
4	6	C30138127	Access Port (6" x 18" x 4" x 5/8") with 2 kellum hooks	A-500-C	205
5	1	MWS00001	TOP STAND OFF SAFETY BRACKET	A-36	1
6	23	TWS00081	STEP BOLT CLIP	A-36	7
7	4	C40999001	1"-8 HEAVY HEX JACKING NUT (BLACK)	A-563	1
				ASSEMBLY WEIGHT:	1705
8	1	116090-0120	TUBE 5/16" x 37.13 x 24.30 x 53-3"	A572-65	5463
9	1	116090-5001	BASE PLATE 2 1/4" x 40.75" SQ.	A572-50	679
4	6	C30138127	Access Port (6" x 18" x 4" x 5/8") with 2 kellum hooks	A-500-C	205
10	4	C30138005	Access Port (10-1/2" x 25-1/2" x 4" x 3/4") without hooks	A-572-65	239
11	2	MWS00002	MIDDLE STAND OFF SAFETY BRACKET	A-36	2
12	1	MWS00003	BOTTOM STAND OFF SAFETY BRACKET	A-36	1
6	40	TWS00081	STEP BOLT CLIP	A-36	12
7	4	C40999001	1"-8 HEAVY HEX JACKING NUT (BLACK)	A-563	1
13	3	MWS00004	GROUND LUG ANGLE	A-36	3
				ASSEMBLY WEIGHT:	6605
				STRUCTURE WEIGHT:	8310
SHIP LOOSE MISC.					
14	63	C40044002	5/8"-11 X 7" STEP BOLT (GALV)	A-307	69
15	4	C40011001	STEP BOLT ANCHOR BRACKET	--	1
16	3	C30136015	4.5" X 8.5" X 0.1875PL ACCESS COVER (GALV)	A-36	7
17	12	C30136004	6.5" X 18.5" X 0.1875PL ACCESS COVER (GALV)	A-36	84
18	4	C30136001	11.0" X 26.0" X 0.1875PL ACCESS COVER (GALV)	A-36	60
19	1	C30012032	SAFETY-CLIMB-SYSTEM-SELECT-KIT 100'	--	48
20	1	C40068001	13OZ CAN OF COLD GALV SPRAY	--	1
21	1	CS00500	NAME PLATE	--	1

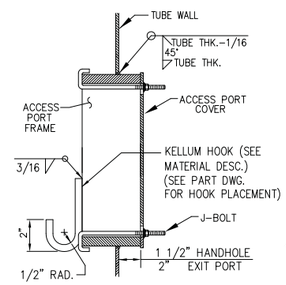

ACCESS PORT DETAIL

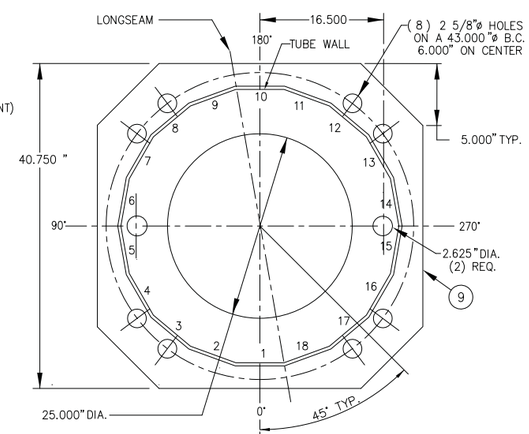

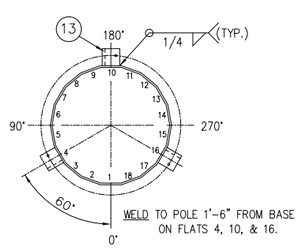

GROUND LUG ANGLE WELD

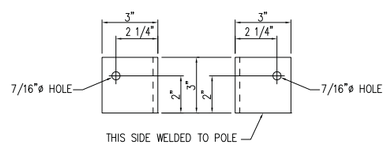

13 MARK: MWS00004

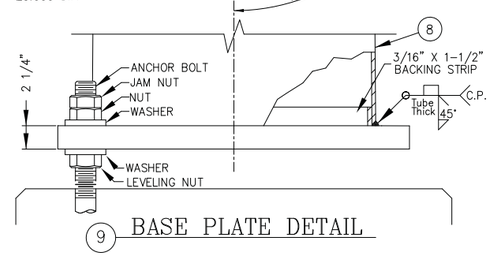

9 BASE PLATE DETAIL

[redacted]

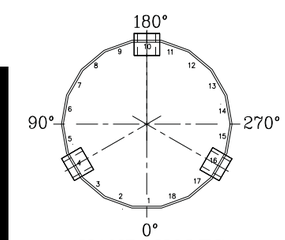

HAND HOLES
TYPICAL ORIENTATION

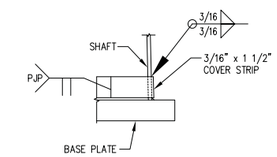

GALVANIZED BASE PLATE WELD DETAIL

NOTE: THE COVER STRIP IS USED BY SABRE INDUSTRIES TO MINIMIZE THE OCCURRENCES OF DELAYED (TOE) CRACKING.

NOTE:
REFER TO DRAWING 9029280 FOR MONOPOLE LONGSEAM WELD DETAILS.

ACCESS PORT DATA TABLE						
ITEM	PART NUMBER	WIDTH	HEIGHT	DEPTH	THICK	MATERIAL SPEC
3	C30138120	4"	8"	3 1/2"	1/2"	A-500-C
4	C30138127	6"	18"	4"	5/8"	A-500-C
10	C30138005	10 1/2"	25 1/2"	4"	3/4"	A-572-65

UNLESS OTHERWISE SPECIFIED ALL DIMENSIONS INCLUDE FINISHES AND ARE IN INCHES

TOLERANCES: FRACTIONS ± 1/16" ANGLES ± 1/2 DEG. DECIMALS ± .010"

MATERIAL:

TOLERANCES DO NOT APPLY TO RAW MATERIAL

Rev	DATE	DRW	CHK	DESCRIPTION

[redacted]

CONFIDENTIAL
Information contained herein is the sole property of Sabre Communications Corporation, constitutes a trade secret as defined by Iowa Code Ch. 550 and shall not be reproduced, copied or used in whole or in part for any purpose whatsoever without prior written consent of Sabre Communications Corporation.

[redacted]

70.00 MONOPOLE

[redacted]

[redacted]

[redacted]TRI–COLLAR ASSEMBLY (10”–40” MONOPOLE)				
ITEM	QTY.	PART. NO.	DESCRIPTION	WEIGHT
1.	3	CW00835	WELDMENT, TRI–COLLAR (10”–40” MONOPOLE)	151
2.	6	C40094012	THREADED ROD ASSEMBLY 5/8 X 2’–9”	25
3.	6	C40094002	THREADED ROD ASSEMBLY 5/8 X 1’–6”	17
			TOTAL WEIGHT	193

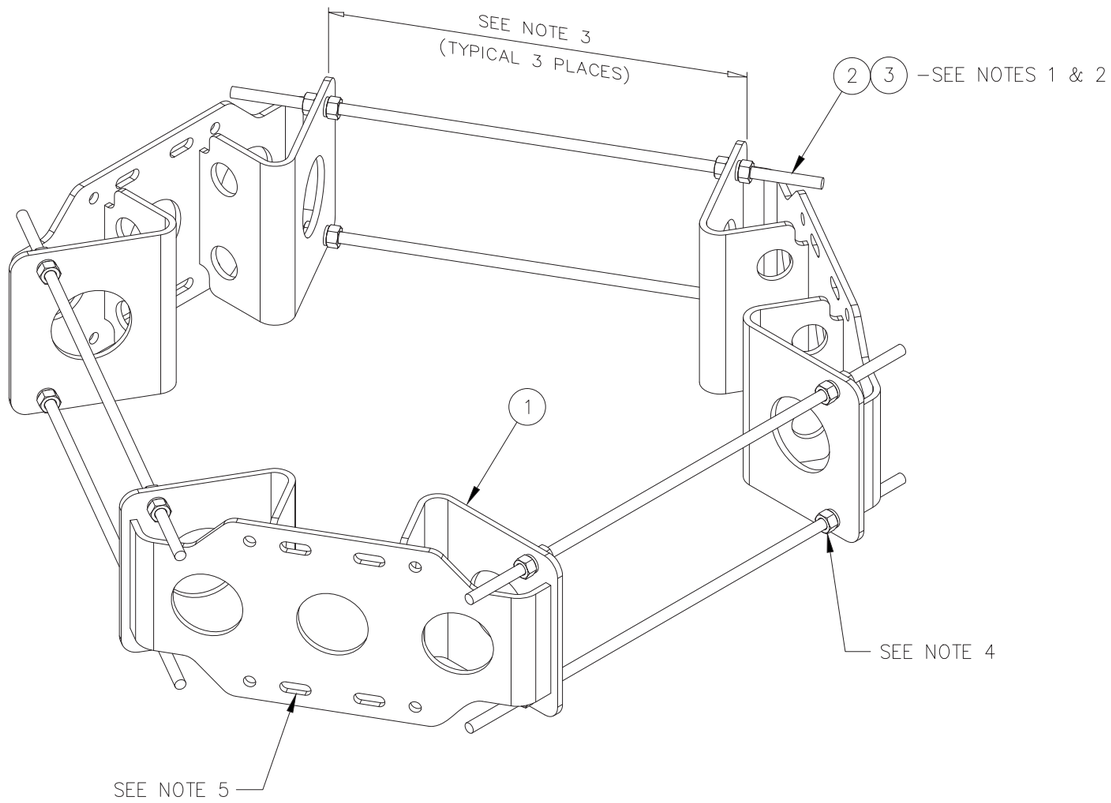

ISOMETRIC VIEW

NOTES:

1. THERE ARE (2) LENGTHS OF THREADED ROD SUPPLIED TO ACCOMMODATE DIAMETERS LISTED BELOW
   USE 5/8 X 1’–6” THREADED ROD ASSEMBLY FOR 10”–24” MONOPOLE DIAMETERS
   USE 5/8 X 2’–9” THREADED ROD ASSEMBLY FOR 24”–40” MONOPOLE DIAMETERS (SEE NOTE 2)
2. THREADED ROD MAY BE SHORTENED IF REQUIRED, FIELD CUT AND COLD GALV SPRAY TO SUIT.
3. THIS DISTANCE MUST BE EQUAL IN ALL (3) THREE LOCATIONS TO ENSURE THE STRUCTURAL INTEGRITY OF THE THREADED RODS AS WELL AS 120° SEPARATION.
4. FOR MONOPOLES 13” DIA. OR SMALLER, ONLY (1) ONE NUT AND (1) ONE LOCKWASHER ARE REQUIRED BETWEEN THE TRI–COLLAR BRACKETS.
   FOR MONOPOLES LARGER THAN 13” DIA., (2) TWO NUTS AND (2) TWO LOCKWASHERS ARE REQUIRED BETWEEN THE TRI–COLLAR BRACKETS.
5. THE MOUNTING SLOTS NOTED WILL ACCOMMODATE 2 3/8”–4 1/2” O.D. MOUNTING PIPES.

[redacted]

UNLESS OTHERWISE SPECIFIED
ALL DIMENSIONS INCLUDE
FINISHES AND ARE IN INCHES

TOLERANCES: FRACTIONS ± 1/16”
ANGLES ± 1/2 DEG.
DECIMALS ± .010”

MATERIAL:

TOLERANCES DO NOT APPLY
TO RAW MATERIAL

[redacted]

REV	DATE	DRW	CHK	DESCRIPTION
[redacted]				

CONFIDENTIAL
This document and the information contained herein is the confidential trade secret property of Sabre Communications Corporation (”Sabre”) and must not be reproduced, copied or used, in whole or in part, for any purpose without the prior written consent of Sabre.
© 2014 Sabre Communications Corporation. All rights reserved.

TRI–COLLAR BRACKET ASSEMBLY
FOR MONOPOLES (10”–40” DIA.)
(CIRCUMFERENCE 31.4” TO 125.7”)

	SIZE	DRAWING NO.	REV
DATE	[redacted]		
DRAWN BY			
CHECKED BY			

[redacted]

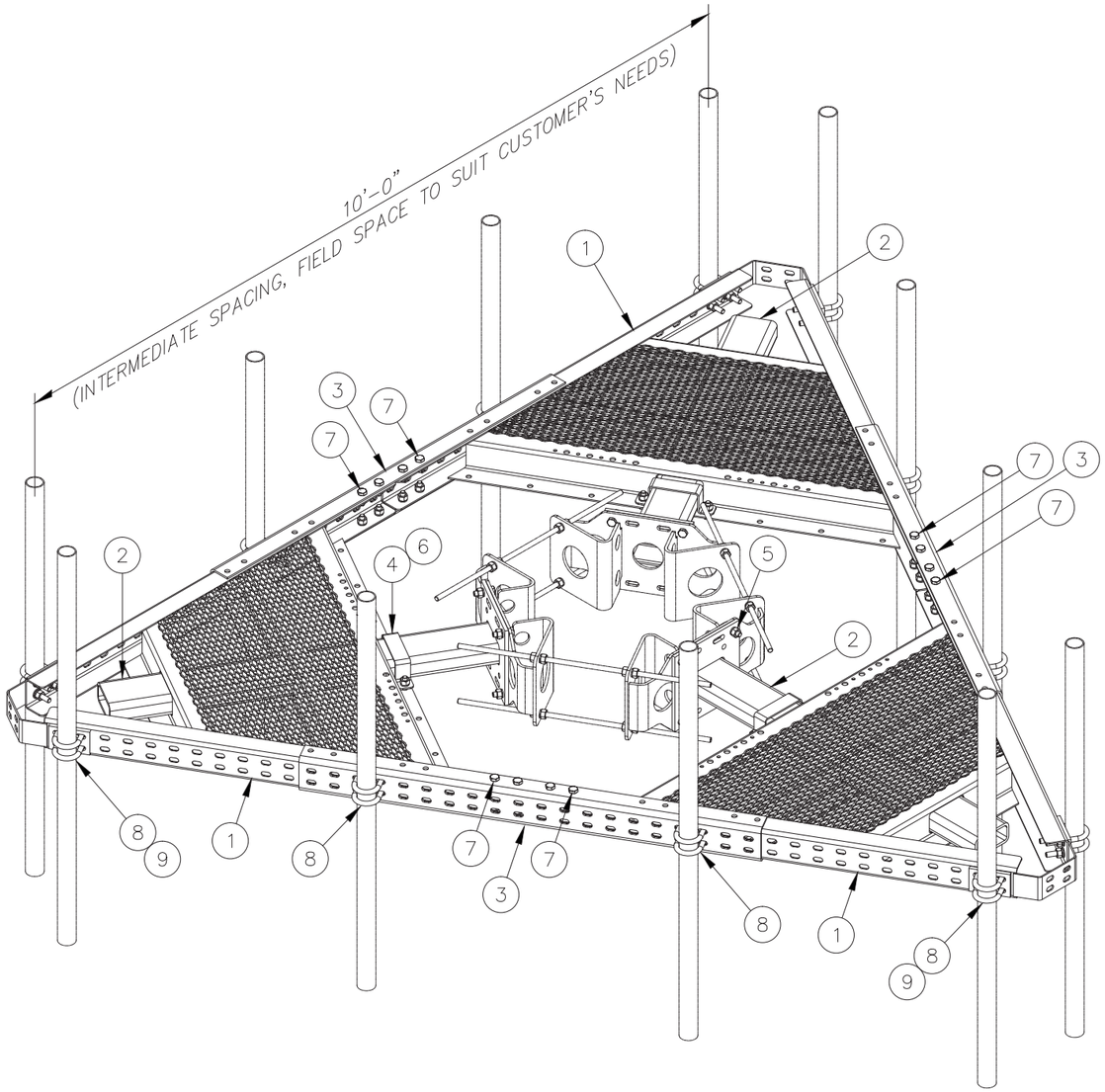

ISOMETRIC VIEW

[redacted] 10' PLATFORM W/MOUNTING PIPE HARDWARE

ITEM	QTY.	PART NO.	DESCRIPTION	WEIGHT
1.	3	CW00885	WELDMENT, CORNER PLATFORM	413
2.	3	CW00886	WELDMENT, PLATFORM ARM	309
3.	3	CS02247	CHANNEL, PLATFORM SPLICE	127
4.	3	CS02248	SADDLE CLAMP, PLATFORM	5
5.	12	C40026024	BOLT ASSEMBLY, 5/8 ø X 2 1/4 A325	6
6.	6	C40026023	BOLT ASSEMBLY, 5/8 ø X 2 A325	3
7.	24	C40026022	BOLT ASSEMBLY, 5/8 ø X 1 3/4 A325	11
8.	24	C40034023	U-BOLT ASSEMBLY, 5/8 ø X 3 1/16 C-C	40
9.	6	CS02317	PLATE, U-BOLT SPACER	14
			TOTAL WEIGHT	928

NOTE:
HARDWARE KIT CK00378 CONSISTS OF ITEMS 4 THRU 9 LISTED ABOVE

UNLESS OTHERWISE SPECIFIED
ALL DIMENSIONS INCLUDE FINISHES AND ARE IN INCHES

TOLERANCES: FRACTIONS ± 1/16"
ANGLES ± 1/2 DEG.
DECIMALS ± .010"

MATERIAL:

TOLERANCES DO NOT APPLY TO RAW MATERIAL

REV	DATE	DRW	CHK	DESCRIPTION

[redacted]

CONFIDENTIAL
This document and the information contained herein is the confidential trade secret property of Sabre Communications Corporation ("Sabre") and must not be reproduced, copied or used, in whole or in part, for any purpose without the prior written consent of Sabre.
© 2014 Sabre Communications Corporation. All rights reserved.

[redacted]

10' LOW PROFILE PLATFORM
W/ANTENNA MOUNTING PIPE HARDWARE

DATE
DRAWN BY
CHECKED B

[redacted]

[redacted]

[redacted] 10' LOW PROFILE PLATFORM HANDRAIL KIT

ITEM	QTY.	PART NO.	DESCRIPTION	WEIGHT
1.	3	CS01533	PLATE, HANDRAIL SUPPORT	38#
2.	3	C10919126	PIPE, 1.90" O.D. (.145" WALL) X 10'-6"	89#
3.	3	C10981204	PIPE, 2 3/8" O.D. (.134" WALL) X 4'-0"	38#
4.	12	C40204100	CROSSOVER CLAMP (1.90" O.D. TO 2 3/8" O.D.)	48#
5.	12	C40034060	U-BOLT ASSEMBLY, 1/2 ø X 2 9/16"C/C	9#
6.	6	C40034023	U-BOLT ASSEMBLY, 5/8 ø X 3 1/16 C/C	10#
			TOTAL WEIGHT	232#

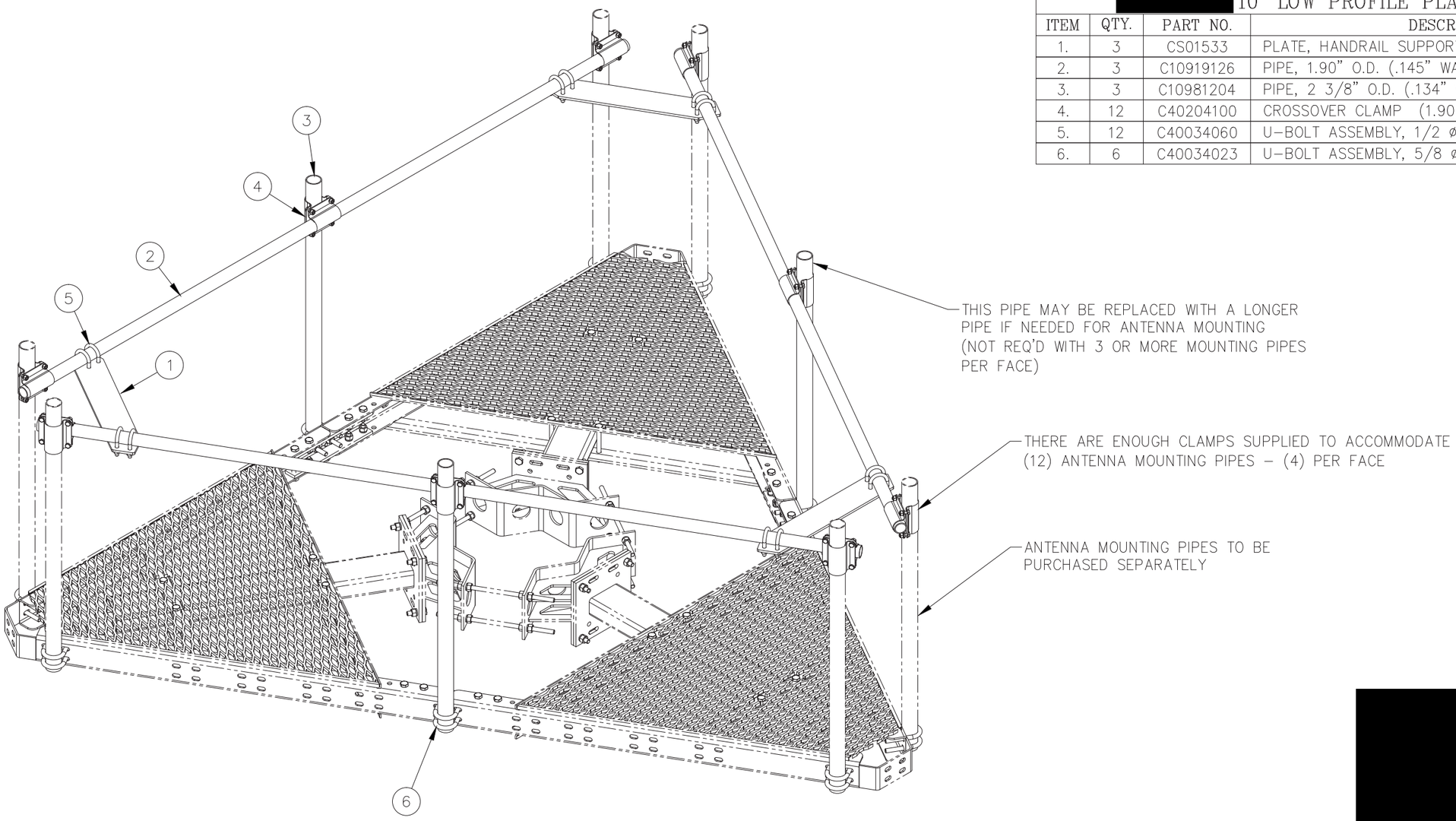

ISOMETRIC VIEW

[redacted]

UNLESS OTHERWISE SPECIFIED
ALL DIMENSIONS INCLUDE
FINISHES AND ARE IN INCHES

TOLERANCES: FRACTIONS ± 1/16"
ANGLES ± 1/2 DEG.
DECIMALS ± .010"

MATERIAL:

TOLERANCES DO NOT APPLY TO RAW MATERIAL

[redacted]

REV	DATE	DRW	CHK	DESCRIPTION

[redacted]

CONFIDENTIAL
This document and the information contained herein is the confidential trade secret property of Sabre Communications Corporation ("Sabre") and must not be reproduced, copied or used, in whole or in part, for any purpose without the prior written consent of Sabre.
© 2014 Sabre Communications Corporation. All rights reserved.

10' LOW PROFILE PLATFORM HANDRAIL KIT
(10'-0" MAXIMUM ANTENNA SEPARATION)

DATE
DRAWN BY
CHECKED BY

[redacted]

[redacted]

[redacted] MONOPOLE TOP STUB MAST ASSEMBLY				
ITEM	QTY.	PART NO.	DESCRIPTION	WEIGHT
1.	1	CW01239	WELDMENT, PIPE STUB MAST 2 3/8 ø X 3'-6"	36
2.	1	C20999008	PIPE CAP, THREADED/GALV.	1
3.	1	C30086003	LIGHTNING ROD ASSEMBLY, 3/4 ø X 8'-0	12
4.	6	C40026053	BOLT ASSEMBLY, 3/4 ø X 4 1/2 A325	6
			TOTAL WEIGHT	55

ISOMETRIC VIEW

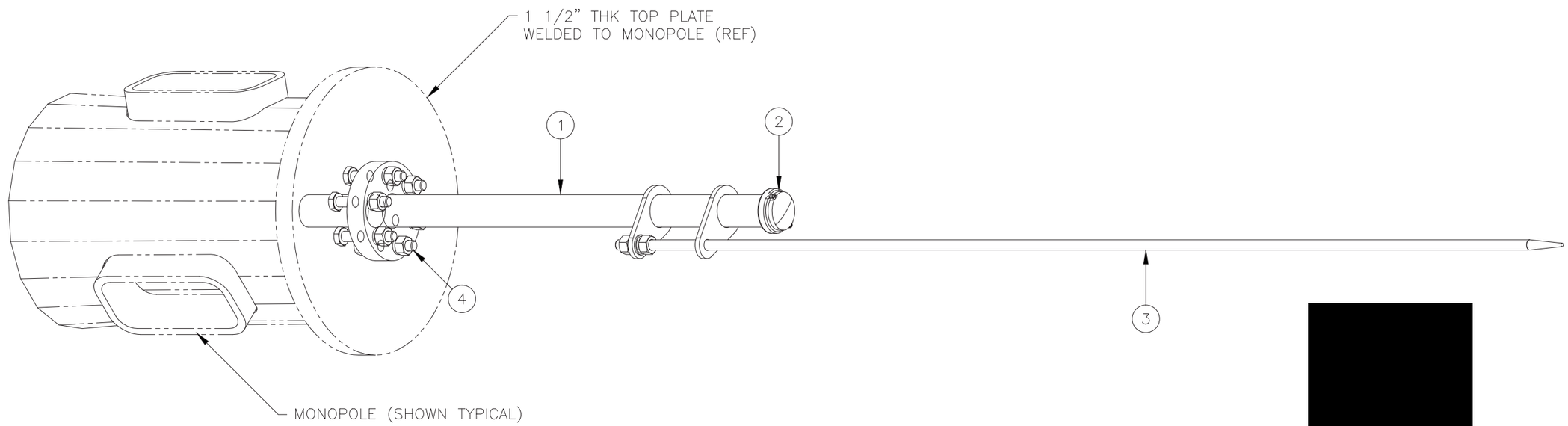

[redacted]

NOTE:
TOP OF PIPE EXTENDS 3 FT. ABOVE THE TOP OF MONOPOLE TOP PLATE.
BOTTOM OF PIPE EXTENDS 6" INTO MONOPOLE BELOW THE TOP OF MONOPOLE TOP PLATE.

UNLESS OTHERWISE SPECIFIED
ALL DIMENSIONS INCLUDE
FINISHES AND ARE IN INCHES

TOLERANCES: FRACTIONS ± 1/16"
ANGLES ± 1/2 DEG.
DECIMALS ± .010"

MATERIAL:

TOLERANCES DO NOT APPLY
TO RAW MATERIAL

[redacted]

MONOPOLE TOP STUB MAST ASSEMBLY

REV	DATE	DRW	CHK	DESCRIPTION

CONFIDENTIAL
This document and the information contained herein is the confidential trade secret property of Sabre Communications Corporation ("Sabre") and must not be reproduced, copied or used, in whole or in part, for any purpose without the prior written consent of Sabre.
© 2014 Sabre Communications Corporation. All rights reserved.

DATE
DRAWN BY
CHECKED BY

[redacted]

SITE DATA

SITE INFORMATION

COUNTY:	LOS ANGELES COUNTY
JURISDICTION:	CITY OF VERNON
OCCUPANCY:	U
ZONING:	INDUSTRIAL
A.P.N.:	[redacted]
USE:	UNMANNED PUBLIC SAFETY TELECOMMUNICATIONS FACILITY
FLOOD ZONE:	X
LAND OWNER:	[redacted]

EQUIPMENT MAINTENANCE:
ESTIMATED VISITS TO MAINTAIN EQUIPMENT ONCE SITE IS OPERATIONAL:
ONE TO TWO TIMES PER MONTH (TYPICAL)

BATTERIES:
BATTERIES TO BE INSTALLED WITHIN EQUIPMENT CABINET ARE GEL-FILLED AND DO NOT REQUIRE SPECIAL VENTILATION MEASURES WITHIN THE CABINET. REFERENCE ATTACHED SPECIFICATIONS.

PROJECT TYPE:
NEW LA-RICS PSBN EQUIPMENT SITE WITH:

- PROPOSED 70 FT. MONOPOLE
- PROPOSED EQUIPMENT CABINETS (TOTAL 4)
- PROPOSED ANTENNAS (2) PER SECTOR, (3) SECTORS TOTAL
- PROPOSED MICROWAVE ANTENNAS (3) TOTAL
- 22kW BACK UP GENERATOR
- 8 FT. SPLIT FACE CMU WALL.

LA-RICS
Los Angeles Regional Interoperable Communications System

[redacted]

PROJECT TEAM

SR.PROJECT MANAGER:
LA-RICS PROJECT TEAM
2525 CORPORATE PLACE, SUITE 200
MONTEREY PARK, CA 91754
[redacted]

PROJECT MANAGER:
[redacted]

PROJECT MANAGER:
[redacted]

ENGINEER/ARCHITECT:
[redacted]

SURVEYOR:
[redacted]

SHEET INDEX

SHEET NO.	DESCRIPTION	REV. NO.
T1	TITLE SHEET	0
GN1	GENERAL NOTES	0
GN2	GENERAL NOTES	0
GN3	GENERAL NOTES	0
GN4	GENERAL NOTES	0
GN5	GENERAL NOTES	0
GN6	GENERAL NOTES	0
GN7	GENERAL NOTES & LEGEND	0
C1	TOPOGRAPHIC SURVEY	0
A1	SITE PLAN	0
A2	ENLARGED SITE PLAN	0
A3	TOWER ELEVATION	0
A4	EQUIPMENT DETAILS	0
A4.1	EQUIPMENT DETAILS	0
A5	PORT ASSIGNMENTS	0
A6	UTILITY DETAILS	0
A7	FOUNDATION & CMU WALL DETAILS	0
A7.1	DETAILS	0
A8	SITE SIGNAGE DETAILS	0
S1	STRUCTURAL NOTES	0
S1.1	STRUCTURAL NOTES	0
S2	CMU WALL DETAIL	0
E1	ELECTRICAL GENERAL NOTES	0
E2	UTILITY ROUTING PLAN	0
E3	ENLARGED UTILITY ROUTING PLAN	0
E4	SINGLE LINE DIAGRAM & DETAILS	0
G1	GROUNDING GENERAL NOTES	0
G2	EXTERIOR GROUNDING PLAN	0
G3	GROUNDING DETAILS	0
G4	EQUIPMENT GROUNDING SYSTEM	0

LA-RICS
Los Angeles Regional Interoperable Communications System

[redacted]

UTILITIES

SCE CUSTOMER SERVICE
1-800-655-4555
SCE CONTACT: JULIO FELIX
TEL: 951-760-6611
ALL IMS INSPECTION REQUEST
EMAIL: IMS@sce.com

Underground Service Alert
Call: TOLL FREE
1-800
422-4133
TWO WORKING DAYS BEFORE YOU DIG
NOTIFY DIG-ALERT OR PRIVATE LOCATING COMPANY PRIOR TO ANY EXCAVATING OR TRENCHING

CENTER OF TOWER

LATITUDE: [redacted]
LONGITUDE: [redacted]
ELEVATION: 182.9 FT. ASL **NAD 83**

APPLICANT

[redacted]

ATTACHMENTS

ERICSSON CABINET DRAWINGS
TOWER DRAWINGS: 100-C-1-S
GEOTECHNICAL REPORT
GENERATOR DRAWINGS
MOTOROLA ANTENNA / MW SYSTEM DRAWINGS
UTILITY DESIGN

APPROVALS

[redacted]

REGIONAL MAP

[redacted]

12°18'
MAGNETIC NORTH

DRIVING DIRECTIONS

FROM THE LA-RICS OFFICE (2525 CORPORATE PLACE, SUITE 200 MONTEREY PARK, CA 91754)

[redacted]

VICINITY MAP

[redacted]

12°18'
MAGNETIC NORTH

© 2010 DeLorme (www.delorme.com) TOPO NORTH AMERICA™

E 54TH ST

NOTE: ALL INFORMATION IS SUBJECT TO FIELD VERIFICATION. ALL INFORMATION IS CONFIDENTIAL AND NOT FOR PUBLIC DISTRIBUTION WITHOUT EXPRESS CONSENT OF THE LOS ANGELES REGIONAL INTEROPERABLE COMMUNICATIONS SYSTEMS AUTHORITY.

[redacted]

TITLE SHEET
T1

[redacted]

LA-RICS
Los Angeles Regional Interoperable Communications System

GENERAL NOTES:

1. THE CONTRACTOR WILL VERIFY AND ESTABLISH FIRST ORDER SURVEY POINTS FOR ALL SITES, NEW OR EXISTING, AND WILL ESTABLISH LINES, LEVELS, GRADES, BENCHMARKS, SURVEY REFERENCE POINTS, AND MEASUREMENTS NECESSARY FOR THE ACCURATE LAYOUT OF THE WORK.

2. CONTRACTOR WILL PROVIDE ALL LABOR, MATERIALS, TOOLS, EQUIPMENT, SAFETY EQUIPMENT, TRANSPORTATION, AND SERVICES NECESSARY TO COMPLETE ALL THE WORK OUTLINED IN ALL THE DRAWINGS, SPECIFICATIONS, SCOPE OF WORK, BILL OF MATERIALS, AND ANY OTHER DOCUMENT ISSUED BY [redacted]

3. THE CONTRACTOR SHALL COMPLY WITH ALL LOCAL AND NATIONAL CODES, LAWS, ORDINANCES, REGULATIONS, SAFETY REGULATIONS. ALL OSHA REGULATIONS, ALL PUBLIC AND MUNICIPAL AUTHORITIES, AND ANY UTILITY COMPANY REGULATIONS AND DIRECTIVES. MOST STRINGENT REQUIREMENT GOVERNS.

4. EXTREMELY SENSITIVE LANDLORD AND WORKING AREA. TEAM MUST REFRAIN FROM EXCESS NOISE. TEAM PROFESSIONALISM IS REQUIRED AT ALL TIMES. NO SMOKING ALLOWED ON COUNTY OR CITY PROPERTY.

5. ALL MATERIALS SUPPLIED BY THE GENERAL DYNAMICS REPRESENTATIVE, AND MOTOROLA, SHALL BE INSTALLED IN ACCORDANCE WITH ALL LOCAL AND NATIONAL CODES, LAWS, ORDINANCES, REGULATIONS AND PER MANUFACTURER'S RECOMMENDATIONS. MOST STRINGENT REQUIREMENT GOVERNS.

6. ANY CONTRACTOR SUBMITTING BIDS ON ANY OF THE WORK IS REQUIRED TO VISIT EACH SITE PRIOR TO THE BID SUBMITTAL AND FAMILIARIZE THEMSELVES WITH EXISTING CONDITIONS & UNDERSTAND THE SCOPE OF WORK INTENDED FOR THE PROJECT. SITE VISITS MUST BE PRE-ARRANGED WITH [redacted] & LARICS THIS WILL BE PERFORMED AT THE CONTRACTOR'S EXPENSE.

7. THE DRAWINGS AND SPECIFICATIONS ARE A GENERAL DIRECTIVE FOR THE SCOPE OF WORK. EXACT DIMENSIONS AND LOCATIONS MAY CHANGE IN THE FIELD. THE CONTRACTOR IS TO VERIFY THE DIMENSIONS AND LOCATIONS AND REPORT ANY AND ALL DISCREPANCIES TO [redacted] PRIOR TO COMMENCING THE RELATED WORK. ANY MINOR ERRORS OR OMISSIONS IN THE DRAWINGS AND SPECIFICATIONS, DOES NOT EXCUSE THE CONTRACTOR FROM COMPLETING THE PROJECT AND IMPROVEMENTS IN ACCORDANCE WITH THE INTENT OF THESE DOCUMENTS.

8. ALL SITES SHALL BE KEPT CLEAN AND FREE OF DEBRIS ON A DAILY BASIS. ALL TRASH AND MATERIALS NO LONGER BEING USED AT THE SITE MUST BE REMOVED AND PROPERLY DISPOSED OF ON A DAILY BASIS. ANY EXCESS MATERIAL WILL BE RETURNED TO [redacted] AND DELIVERED TO THE WAREHOUSING FACILITY PER THE DIRECTION OF [redacted] ONSITE FACILITY DUMPSTERS ARE NOT TO BE USED FOR THE DISPOSAL OF CONSTRUCTION DEBRIS.

8A. CONTRACTOR TO PROVIDE PORTABLE RESTROOMS.

9. THE CONTRACTOR SHALL NOT PROCEED WITH ANY WORK AT THE SITE PRIOR TO A NOTICE TO PROCEED (NTP) BEING ISSUED AND A PRE-CONSTRUCTION MEETING AT THE SITE HAS TAKEN PLACE. PRE-CONSTRUCTION MEETING WILL BE COORDINATED AND HELD A MIN. OF 7 DAYS PRIOR TO START AND NO EARLIER THEN 21 DAYS.

10. SITE CONSTRUCTION TO BE CONDUCTED UNDER NORMAL BUSINESS HOURS FROM 8AM TO 5PM.

11. THE CONTRACTOR SHALL HAVE A DESIGNATED MANAGER ON SITE AT ALL TIMES THAT ANY WORK IS BEING PERFORMED. A CONTRACTOR IS NOT DEFINED AS A DESIGNATED MANAGER.

12. THE CONTRACTOR SHALL PROVIDE A SCHEDULED LIST OF ALL CONTRACTORS, WHICH SHALL INCLUDE ADDRESSES, CELL PHONE NUMBERS, HOME PHONE NUMBERS, VERIFICATION OF INSURANCE, ANY AND ALL PERTINENT LICENSES, AND AN ACCURATE SCHEDULE FOR THE PROJECT PRIOR TO THE ISSUANCE OF A NOTICE TO PROCEED NTP. BADGES ARE REQUIRED.

13. CONTRACTOR WILL KEEP COMPLETE UP-TO-DATE SET OF THE DRAWINGS, SPECIFICATIONS, SCOPE OF WORK, AND BILL OF MATERIALS ON SITE AT ALL TIMES. THIS WILL BE REFERENCED AS THE AS-BUILT DRAWINGS AND MUST BE KEPT CURRENT ON A DAILY BASIS. THIS IS IN ADDITION TO THE PERMIT SET.

14. NEW AND CLEAN SETS OF CONTRACT DOCUMENTS WILL BE ISSUED TO THE CONTRACTOR NEAR THE COMPLETION OF THE PROJECT TO BE USED TO TRANSFER THE INFORMATION FROM THE FIELD COPY OF AS-BUILT DRAWINGS TO THE NEW COPY. THIS NEEDS TO BE SUBMITTED TO [redacted] WITH THE CLOSE-OUT DOCUMENTS, 6 VERIFIED COPIES TOTAL. AS-BUILDS TO BE SUBMITTED IN ELECTRONIC (PDF & AUTOCAD) FORMAT AND REPRODUCIBLE FORMATS.

15. ON ANY COLLOCATION SITE, THE CONTRACTOR AND ALL SUB'S ASSIGNED ARE NOT TO USE EXISTING POWER OR TAMPER WITH ANY EQUIPMENT BELONGING TO ANY OTHER CARRIER. FAILURE TO ADHERE TO THIS WILL CAUSE IMMEDIATE DISMISSAL OF THE CONTRACTOR FROM THE PROJECT.

16. THE CONTRACTOR IS RESPONSIBLE FOR SCHEDULING ALL INSPECTIONS AND TESTING REQUIRED FOR EACH PROJECT. A 24-HOUR NOTIFICATION TO [redacted] IS REQUIRED FOR ALL INSPECTIONS AND TESTING. A FIELD COPY OF ALL INSPECTION AND TESTING REPORTS AS WELL AS TRUCK TICKETS MUST BE SUBMITTED TO [redacted] WITHIN THE CLOSEOUT PACKAGE.

17. THE CONTRACTOR IS RESPONSIBLE TO VERIFY ALL MATERIAL ISSUED TO HIM/ HER, AND TO REPORT ANY SHORTAGES AND DISCREPANCIES TO [redacted] AT THE TIME OF ISSUANCE. THE CONTRACTOR SHALL STORE THESE MATERIALS PROPERLY, ACCORDING TO THE MANUFACTURER'S RECOMMENDATIONS AND IN A MANNER THAT WILL NOT VOID THE WARRANTY OF ANY ITEM. IF ANY ITEM IS DAMAGED OR UNUSABLE DUE TO IMPROPER HANDLING AND STORAGE, THE CONTRACTOR WILL REPLACE IT AT HIS/ HER EXPENSE.

18. THE CONTRACTOR IS RESPONSIBLE TO FURNISH PROPER FACILITIES FOR THE WORKERS ON EACH PROJECT FOR THE DURATION OF THAT PROJECT. WORKERS ARE NOT ALLOWED TO USE FACILITY REST ROOMS AT ANYTIME.

GENERAL NOTES (CONTINUED):

19. THE CONTRACTOR IS RESPONSIBLE TO MAINTAIN THE PRESENT CONDITION OF ANY EXISTING BUILDINGS, LANDSCAPING, FENCING, EQUIPMENT, WALKS, DRIVES, AND ATTACHMENTS. IF ANY DAMAGE SHOULD OCCUR, THE CONTRACTOR IS RESPONSIBLE TO RESTORE THE DAMAGE TO A BETTER OR NEW CONDITION. CONTRACTOR SHALL COMPLY WITH SITE CLEANLINESS REQUIREMENTS.

20. NO SMOKING ON LOS ANGELES COUNTY OR CITY PROPERTY AT ANYTIME.

21. TOWER CLIMBERS PROFESSIONALS TO PRESENT CLIMBING CERTIFICATION WITHIN TWO YEARS FROM EXPIRATION DATES.

22. THE CONTRACTOR WILL REMOVE FROM THE PROJECT SITE, TRANSPORT AND DISPOSE AT AUTHORIZED DUMP SITES AT ITS COST, ANY EXISTING STRUCTURE TO BE REPLACED UNLESS DIRECTED OTHERWISE BY THE AUTHORITY. THIS INCLUDES ANY EXISTING FLAG POLE, OR ANTENNA SUPPORT STRUCTURE THAT WILL BE REPLACED. EXCEPT FOR A MONOPOLE, HOSE RACK, GUYED TOWER, OR SELF-SUPPORTING COMMUNICATION TOWER. THE AUTHORITY SHALL RECOVER ANY SALVAGE VALUE FROM THE DISPOSAL OF THESE STRUCTURES.

23. CONTRACTOR TO COORDINATE WITH AUTHORITY TO RELOCATE ANY EXISTING EQUIPMENT, WHERE APPLICABLE.

24. NAMEPLATES WILL BE PLASTIC LAMINATED, WHITE FACE WITH BLACK ENGRAVED CHARACTERS AND WILL COMPLY WITH BTOP LABELING REQUIREMENTS.

PART 1 – PROJECT GENERAL NOTES:

1.1 SCOPE OF WORK

A. PROVIDE ALL LABOR, MATERIAL, TOOLS, EQUIPMENT, TRANSPORTATION AND SERVICES NECESSARY FOR AND INCIDENTAL TO COMPLETION OF ALL WORK AS INDICATED ON THE DRAWINGS AND /OR AS SPECIFIED HEREIN.

1.2 DRAWING USE AND INTERPRETATION

A. THE DRAWINGS ARE DIAGRAMMATIC AND INDICATE THE GENERAL ARRANGEMENT OF SYSTEMS AND EQUIPMENT UNLESS INDICATED OTHERWISE BY DIMENSIONS OR DETAILS. EXACT EQUIPMENT LOCATIONS AND ROUTINGS, ETC. SHALL BE GOVERNED BY ACTUAL FIELD CONDITIONS AND/ OR INSTRUCTIONS OF [redacted]

B. ANY CHANGE MUST BE APPROVED IN WRITING BY GENERAL DYNAMICS PRIOR TO WORK BEING DONE. AS-BUILD REDLINE CHANGES MUST BE MAINTAINED ONSITE DURING CONSTRUCTION ACTIVITIES.

1.3 COMPLETE SYSTEMS

A. GENERAL: FURNISH AND INSTALL ALL MATERIALS AS REQUIRED FOR COMPLETE SYSTEMS, WHETHER SPECIFICALLY INDICATED OR NOT. ALL SYSTEMS SHALL BE COMPLETELY ASSEMBLED, TESTED, ADJUSTED, DEMONSTRATED TO BE READY FOR OPERATION PRIOR TO OPERATORS ACCEPTANCE.

1.4 CODES AND REGULATIONS

A. GENERAL: COMPLY WITH ALL GOVERNING FEDERAL, STATE AND LOCAL LAWS, ORDINANCES, CODES, RULES AND REGULATIONS. WHERE THE CONTRACT DOCUMENTS EXCEED THESE REQUIREMENTS, THE CONTRACT DOCUMENTS SHALL GOVERN. IN NO CASE SHALL WORK BE INSTALLED CONTRARY TO OR BELOW MINIMUM LEGAL STANDARDS.

B. UTILITIES: COMPLY WITH ALL APPLICABLE RULES, RESTRICTIONS, AND REQUIREMENTS OF THE UTILITY COMPANIES SERVING THE PROJECT SITE/ FACILITIES.

C. NONCOMPLIANCE: SHOULD ANY WORK BE PERFORMED WHICH IS FOUND NOT TO COMPLY WITH ANY OF THE ABOVE, CONTRACTOR SHALL PROVIDE ALL WORK AND PAY ALL COSTS NECESSARY TO CORRECT THE DEFICIENCIES.

D. CONSTRUCTION MANAGEMENT REQUIREMENT: REFER TO THE CMR SITE FOR SITE SPECIFIC CONSTRUCTION REQUIREMENTS.

1.5 REFERENCE STANDARDS

A. ALL LATEST PUBLISHED STANDARDS OF THE FOLLOWING ASSOCIATIONS/ ORGANIZATIONS SHALL BE FOLLOWED AND APPLIED WHERE APPLICABLE, AS MINIMUM REQUIREMENTS.

1. 2013 CALIFORNIA BUILDING CODE (CBC)
2. AMERICAN NATIONAL STANDARDS INSTITUTE (ANSI)
3. AMERICAN SOCIETY FOR TESTING AND MATERIALS (ASTM)
4. ELECTRICAL TESTING LABORATORY (ETL)
5. INSULATED CABLE ENGINEERS ASSOCIATION (ICEA)
6. INSTITUTE OF ELECTRICAL AND ELECTRICAL ENGINEERS (IEEE)
7. NATIONAL BOARD OF FIRE UNDERWRITERS (NBFU)
8. NATIONAL ELECTRICAL MANUFACTURER'S ASSOCIATION (NEMA)

1.5 REFERENCE STANDARDS (CONTINUED):

9. NATIONAL ELECTRIC SAFETY CODE (NESC)
10. NATIONAL FIRE PROTECTION ASSOCIATION (NFPA)
11. UNDERWRITER'S LABORATORIES (UL)
12. BUILDING OFFICIALS & CODE ADMINISTRATORS (BOCA)
13. NATIONAL ELECTRICAL CODE (NEC)
14. INTERNATIONAL BUILDING CODE (IBC)
15. UNDERWRITERS LABORATORIES (UL)
16. MIL-STD-810 (LATEST REVISION)
17. TELECOMMUNICATIONS INDUSTRY ASSOCIATION (TIA)
18. ELECTRONIC INDUSTRY ALLIANCE (EIA)
19. NATIONAL INSTITUTE OF STANDARDS AND TECHNOLOGY (NIST)
20. AMERICAN CONCRETE INSTITUTE (ACI)
21. LAND USE PLAN ADOPTED BY THE AIRPORT LAND USE COMMISSION (ALUC).
22. FEDERAL AVIATION ADMINISTRATION (FAA) RULES & REGULATIONS
23. NATIONAL ENVIRONMENTAL POLICY ACT (NEPA)
24. THE CALIFORNIA ENVIRONMENTAL QUALITY ACT (CEQA)
25. AMERICAN SOCIETY OF TESTING MATERIALS, ASTM (APPLICABLE SECTIONS AS LISTED IN THIS SPECIFICATION).
26. INTERNET ENGINEERING TASK FORCE (IETF) STANDARDS AND BEST PRACTICES FOR INTERNET PROTOCOL (IP) NETWORKS
27. AMERICAN INSTITUTE OF STEEL CONSTRUCTION LOAD RESISTANCE FACTOR DESIGN MANUAL 2013 AISC 14TH EDITION
28. PART 15, 80, 90, AND 101 OF THE FEDERAL COMMUNICATIONS COMMISSION (FCC) RULES AND REGULATIONS
29. CALIFORNIA'S ROHS (RESTRICTION OR USE OF CERTAIN HAZARDOUS SUBSTANCES), SECTION 25214.10 OF THE CALIFORNIA HEALTH AND SAFETY CODE
30. FCC AND OSHA SPECIFICATIONS RELATED TO MAXIMUM PERMISSIBLE EXPOSURE (MPE) LIMITS FOR THE POWER DENSITY AN MAGNETIC AND ELECTRIC FIELD STRENGTH FROM RF TRANSMITTERS, INCLUDING BUT NOT LIMITED TO MPE STANDARDS SET FORTH IN SECTIONS 1.307 AND 1.1310 OF TITLE 47 OF THE CODE OF FEDERAL REGULATIONS.
31. LOS ANGELES COUNTY, AND OTHER JURISDICTIONAL AGENCIES, CODES AND ORDINANCES IEEE, TIA AND TELCORDIA STANDARDS ON GROUNDING, BONDING AND LIGHTENING PROTECTION FOR SENSITIVE ELECTRONIC AND TELECOMMUNICATIONS EQUIPMENT TELECOMMUNICATION INDUSTRY ASSOCIATION, ANSI/TIA 222 G, STRUCTURE STANDARDS FOR ANTENNA SUPPORTING STRUCTURES AND ANTENNAS
32. 2014 COUNTY OF LOS ANGELES BUILDING CODE (TITLE 26), AND OTHER JURISDICTIONAL AGENCIES, BASED ON THE 2013 CALIFORNIA BUILDING CODE AND THE 2012 INTERNATIONAL BUILDING CODE
33. AMERICAN WELDING SOCIETY (AWS) STRUCTURAL WELDING CODE D1.1 – LATEST REVISION FEDERAL AVIATION ADMINISTRATION, FAA ADVISORY CIRCULAR AC 70/7476, OBSTRUCTION MARKING AND LIGHTING, AND ALL ADVISORY CIRCULAR REFERENCED THEREIN INCLUDING SPECIFICATIONS FOR OBSTRUCTION LIGHTING EQUIPMENT (AC 150/5345-43F), INCLUDING ALL CHANGES
34. FEDERAL COMMUNICATIONS COMMISSION, FCC RULES AND REGULATIONS, PART 17, SUBPART C. SPECIFICATIONS FOR OBSTRUCTION MARKING AND LIGHTING OF ANTENNA STRUCTURES, SECTIONS 17.21 THROUGH 17.58, AND FCC FORM 715, OBSTRUCTION MARKING AND LIGHTING SPECIFICATIONS FOR ANTENNA STRUCTURES.
35. ALL LOCAL BUILDING CODES, RULINGS, ZONING, AND PLANNING ORDINANCES.
36. MOTOROLA R56

1.6 PERMITS

1. ALL PERMITS REQUIRED BY ALL APPLICABLE AGENCIES, WILL BE OBTAINED BY THE CONTRACTOR.

GENERAL NOTES
GN1

NOTE: ALL INFORMATION IS SUBJECT TO FIELD VERIFICATION. ALL INFORMATION IS CONFIDENTIAL AND NOT FOR PUBLIC DISTRIBUTION WITHOUT EXPRESS CONSENT OF THE LOS ANGELES REGIONAL INTEROPERABLE COMMUNICATIONS SYSTEMS AUTHORITY.

1.7 SUBMITTALS

A. REQUIRED SUBMITTALS INCLUDE: LIST OF CONTRACTORS; PRODUCT DATA; SHOP DRAWINGS; AND VARIOUS ADMINISTRATIVE SUBMITTALS.

B. RECORD DOCUMENTS: INDICATED ACTUAL INSTALLED LOCATIONS FOR ALL EQUIPMENT AND DEVICES ROUTING OR MAJOR INTERIOR RACEWAYS. LOCATIONS OF ALL CONCEALED AND UNDERGROUND EQUIPMENT AND RACEWAYS AND ALL APPROVED MODIFICATIONS TO THE CONTRACT DOCUMENTS, AND DEVIATIONS NECESSITATED BY FIELD CONDITIONS AND CHANGE ORDERS.

C. SAFETY MEETING(S) MINUTES.

D. NUMBER OF COPIES OF ALL SUBMITTALS: TWO

1.8 QUALITY ASSURANCES

A. MANUFACTURERS QUALIFICATIONS: NOT LESS THAN THREE YEARS EXPERIENCE IN THE ACTUAL PRODUCTION OF THE SPECIFIED PRODUCTS.

B. INSTALLERS QUALIFICATIONS: FIRM WITH NOT LESS THAN FIVE YEARS EXPERIENCE IN THE INSTALLATION OF ELECTRICAL SYSTEMS AND EQUIPMENT SIMILAR IN SCOPE AND COMPLEXITY TO THOSE REQUIRED FOR THIS PROJECT, AND HAVING SUCCESSFULLY COMPLETED AT LEAST TEN COMPARABLE SCALE PROJECTS.

C. INCIDENTAL WORK: PAINTING, PATCHING WELDING, CARPENTRY, MECHANICAL WORK AND THE LIKE REQUIRED FOR WORK SHALL BE PERFORMED BY CRAFTSMAN SKILLED IN THE APPROPRIATE TRADE.

D. THE CONTRACTOR IS TO REVIEW AND UNDERSTAND THE SITE INSPECTION CHECKLIST FOR THE SITE PHOTO, QA AND CLOSEOUT.

E. CONTRACTOR IS RESPONSIBLE FOR COMPLETING THE CERTIFICATION OF HAZARD ASSESSMENT ON A DAILY BASIS. IN ADDITION TO THE SITE HAZARDS, THE FORM NEEDS TO INCLUDE INFORMATION ON THE NEAREST HOSPITALS, FIRE DEPARTMENT AND POLICE DEPARTMENT AND SITE ADDRESS OR LAT/LONG.

F. THE CONTRACTOR SHALL HAVE AT LEAST TWO PERSONS ON SITE AT ALL TIMES WITH VALID CERTIFICATIONS IN THE FIRST AID AND CPR.

1.9 INSPECTIONS

A. GENERAL: DURING AND UPON COMPLETION OF THE WORK, ARRANGE AND PAY ALL ASSOCIATED COSTS FOR INSPECTION OF ALL ELECTRICAL WORK INSTALLED UNDER THIS CONTRACT, IN ACCORDANCE WITH THE CONDITIONS OF THE CONTRACT.

B. INSPECTIONS REQUIRED: AS PER THE LAWS AND REGULATIONS OF THE LOCAL AND/ OR STATE AGENCIES HAVING JURISDICTION AT THE PROJECT SITE. SEE AUTHORITY FOR ADDITIONAL INFORMATION FOR INSPECTION AND NOTIFICATION PROCESSES.

C. INSPECTION AGENCY: APPROVED BY THE LOCAL AND/ OR STATE AGENCIES HAVING JURISDICTION AT THE PROJECT SITE.

D. CERTIFICATES: SUBMIT ALL REQUIRED INSPECTION CERTIFICATES.

E. STATEMENT OF SPECIAL INSPECTIONS: WHERE SPECIAL INSPECTION OR TESTING IS REQUIRED BY SECTION 1705, THE REGISTER DESIGN PROFESSIONAL IN RESPONSIBLE CHARGE SHALL PREPARE A STATEMENT OF SPECIAL INSPECTIONS IN ACCORDANCE WITH SECTION 1704.2.3 OF THE 2013 CBC

F. CONTRACTOR TO PROVIDE ALL REQUIRED THIRD PARTY SPECIAL INSPECTOR OR DEPUTY INSPECTOR TO ENSURE THEY INCLUDE INSPECTIONS AND TESTS REQUIRE BY SECTION 1705 (CBC 2013), BUT NOT LIMITED TO:

-FOUNDATIONS
-CONDUITS
-ELECTRICAL
-TOWER SOILS
-TOWER FOUNDATION REBAR
-TRENCHING AND BACK FILL
-COMPACTION TEXT (6" PLACED LAYERS TO BE COMPACTED AT LEAST 95%)
-TOWER ASSEMBLY
-STEEL PLATFORM ASSEMBLY
-FINAL SITE INSPECTION
INCLUDES ALL TRAVEL, PER DIEM AND EXPENSES IN THE PROVIDED COST.

G. ADDITIONAL INSPECTIONS THAT REQUIRE NOTIFICATION TO AUTHORITY
- TESTING EXISTING GENERATOR USING APPROX SIZED LOAD BANK, WITNESSED BY AUTHORITY.

1.10 DELIVERY STORAGE AND HANDLING

A. PACKING AND SHIPPING: DELIVER PRODUCTS IN ORIGINAL UNOPENED PACKAGING, PROPERLY IDENTIFIED WITH MANUFACTURER'S IDENTIFICATION, AND COMPLIANCE LABELS.

B. STORAGE AND PROTECTION: COMPLY WITH ALL MANUFACTURER'S WRITTEN RECOMMENDATIONS. STORE ALL PRODUCTS IN A MANNER WHICH SHALL PROTECT THEM FROM DAMAGE, WEATHER, AND ENTRY OF DEBRIS.

C. DAMAGED PRODUCTS: DO NOT INSTALL DAMAGED PRODUCTS. ARRANGE FOR PROMPT REPLACEMENT.

D. CONTRACTOR RESPONSIBLE FOR MATERIALS UPON RECEIPT.

E. CONTRACTOR SHALL COORDINATE MATERIAL STAGING AND SITE STORAGE WITH EACH SITE COMPETENT PARTY.

1.11 LANDSCAPING

A. THE CONTRACTOR SHALL GRUB THE SITE AREA AND ANY ACCESS ROAD, CLEARING AND REMOVING A MINIMUM OF 6" TO ACHIEVE A STABLE SUB-BASE TO ACCEPT FILL OR OTHER MATERIAL SPECIFIED FOR THE SITE AND NOT REUSED IN ANY PART OF THIS PROJECT.

B. IT IS THE CONTRACTOR'S SOLE RESPONSIBILITY TO CALL THE LOCAL LOCATING AUTHORITIES (OR PRIVATE LOCATING SERVICES AND OTHER STEPS AS REQUIRED TO VERIFY THE LOCATION OF ANY UNDERGROUND UTILITIES OR LINES THAT EXIST WITHIN THE ENTIRE PROJECT AREA. THE CONTRACTOR SHALL PLACE THESE ITEMS ON THE AS-BUILT DRAWINGS.

C. IF NEW LANDSCAPING IS REQUIRED REFER TO LANDSCAPE SHEETS ATTACHED FOR DETAILS. CONTRACTOR TO PROVIDE NURSERY BILL OF LADING.

D. ALL ROADWORK AND MATERIALS SHALL CONFORM TO ALL STATE AND LOCAL CODES IN ACCORDANCE WITH THE DEPARTMENT OF HIGHWAY AND PUBLIC TRANSPORTATION STANDARD SPECIFICATIONS.

E. THE ACCESS ROAD, IF REQUIRED, WILL BE CONSTRUCTED FIRST BEFORE ANY OTHER WORK ON THE SITE IS PERMITTED. BRING THE ROAD TO SUB-BASE COURSE TO ALLOW CONSTRUCTION TRAFFIC TO USE THE ROAD FOR THE PROJECT, AND COMPLETE THE ROAD AFTER THE CONSTRUCTION OF THE SITE IS SUBSTANTIALLY COMPLETE.

F. THE CONTRACTOR WILL PROVIDE FINISHED GRADING THAT WILL BE PERFORMED AFTER THE WORK IN THE AREA IS COMPLETE AND JUST PRIOR TO PLACING GRAVEL SURFACING. FILL, IF NECESSARY, WILL BE BROUGHT TO FINISHED GRADES INDICATED AND WILL BE GRADED TO DRAIN WATER AWAY FROM STRUCTURES. A MINIMUM SLOPE OF 2% WILL BE PROVIDED FOR POSITIVE DRAINAGE AWAY FROM PROPOSED STRUCTURES. GRADING WILL PROVIDE AN EVEN, SMOOTH SURFACE FREE FROM CELLULOSE MATERIALS, LARGE ROCKS, AND OTHER DELETERIOUS MATERIALS.

G. ALL ACCESS ROAD AND SITE AREAS WILL HAVE AN UNDERLAY OF AMOCO PROPEX, OR EQUAL.

H. A SOIL STERILIZER SHALL BE APPLIED TO ALL GRAVEL SURFACES, AND BE AN EPA REGISTERED LIQUID COMPOSITION AND OF PRE-EMERGENCE DESIGN. THE PRODUCT LABEL AND INFORMATION WILL BE GIVEN TO [redacted]

I. GRAVEL FILL SHALL BE WELL-GRADED, HARD, DURABLE, NATURAL SAND AND GRAVEL, FREE FROM ICE AND SNOW, ROOTS SOD RUBBISH, AND OTHER DELETERIOUS OR ORGANIC MATTER. MATERIAL SHALL CONFORM TO THE FOLLOWING GRADATION REQUIREMENTS:

SIEVE NUMBER	% PASSING BY WEIGHT
4"	100
1/2"	50-85
#4	40-75
#10	30-60
#40	10-30
#100	5-20
#200	0-8

J. ALL FILL DIRT SHALL BE CLEAN AND NATURAL, FREE FROM ANY DELETERIOUS MATERIALS, ROOTS, ICE, SNOW, SOD, AND RUBBISH. A COPY OF ALL DELIVERY TICKETS WILL BE SUBMITTED TO [redacted] WITHIN 24 HOURS FROM THE DELIVERY.

K. TRENCHES SHALL HAVE A CLEAN COMPATIBLE FILL PLACED IN MAXIMUM LIFTS OF 6", AND MECHANICALLY COMPACTED TO A DENSITY OF 95% (REFER TO SOILS REPORT FOR SITE SPECIFIC REQUIREMENTS BY ENGINEER). METALLIC WARNING TAPE (RED W/ FOIL BACKING) SHALL BE PLACED AT 12" BELOW FINISHED GRADE ALONG THE ENTIRE TRENCH. ANY DEVIATION FROM SOLIDS REPORT SHALL BE APPROVED BY SOIL ENGINEER AND AUTHORITY.

L. ALL COMPACTING OF SITE AREAS SHALL BE ACCOMPLISHED BY MECHANICAL MEANS. LARGER AREAS SHALL BE COMPACTED BY POWER-DRIVEN HAND HELD TAMPER. ALL COMPACTED AREAS SHALL BE COMPACTED WITHIN 95% (REFER TO SOILS REPORT FOR SITE SPECIFIC REQUIREMENTS BY ENGINEER) AND TESTED BY AN INDEPENDENT LABORATORY AND ACCOMPANIED BY GEOTECHNICAL REPORT. IT WILL BE THE RESPONSIBILITY OF THE CONTRACTOR TO SCHEDULE TESTING. ANY SCHEDULING FOR A PROCTOR WILL BE THE CONTRACTORS RESPONSIBILITY, AND MUST BE DONE IN A TIMELY FASHION TO ASSURE THE PROJECT WILL NOT BE DELAYED. ANY DEVIATION FROM SOLIDS REPORT SHALL BE APPROVED BY SOIL ENGINEER AND AUTHORITY.

M. ANY FILL OR STONE WILL BE PLACED IN MAXIMUM 6" LIFTS PRIOR TO COMPACTING.

N. FINISHED GRADE, INCLUDING TOP SURFACE COURSE, SHALL EXTEND A MINIMUM 12" BEYOND THE SITE FENCE AND SHALL COVER THE AREA AS INDICATED USING CRUSHED STONE #3.

O. USE RIP RAP IN AREAS WITH SLOPE GREATER THEN 2:1, IN THE ENTIRE DITCH FOR 6 FEET IN ALL DIRECTIONS AT CULVERT OPENINGS. SUBJECT TO APPROVAL BY STRUCTURAL AND SOIL ENGINEER.

P. SEED FERTILIZER AND STRAW COVER SHALL BE APPLIED TO ALL OTHER DISTURBED AREAS, DITCHES, DRAINAGE, AND SWALES NOT OTHERWISE RIPRAPPED. SEED AND FERTILIZER SHALL BE APPLIED TO SURFACE CONDITIONS THAT WILL ENCOURAGE ROOTING. PREPARE SURFACE PROPERLY TO ACCEPT TO SEEDS. SOW SEEDS IN TWO OPPOSITE DIRECTIONS IN TWICE THE QUANTITY RECOMMENDED BY THE SEED PRODUCER.

Q. THE CONTRACTOR IS RESPONSIBLE TO ENSURE GROWTH OF THE SEEDED AND LANDSCAPED AREAS BY WATERING, STRAW, MULCH, NET, AND ANY OTHER PROPER LANDSCAPING METHOD NECESSARY. ALL AREAS MUST HAVE SUSTAINED GROWTH BY THE TIME OF COMPLETION OF PROJECT.

R. THE CONTRACTOR SHALL PROTECT ALL AREAS FROM WASHOUTS AND SOIL EROSION. STRAW BALES SHALL BE PLACED AT THE INLET APPROACH TO ALL NEW OR EXISTING CULVERTS.

1.12 MAINTAINING SITE CONDITIONS

A. THE CONTRACTOR IS RESPONSIBLE FOR MAINTAINING A NEAT AND ORDERLY PROJECT SITE. REMOVE AND DISPOSE OFF SITE ALL RUBBISH, WASTE, LITTER, AND ALL FOREIGN SUBSTANCES IN A LEGAL MANNER. REMOVE PETROCHEMICAL SPILLS, STAINS, AND OTHER FOREIGN DEPOSITS IN COMPLIANCE WITH OSHA REGULATIONS. RETURN ALL SURFACES TO ORIGINAL CONDITION. CONTRACTOR SHALL COMPLY WITH ALL BMP REQUIREMENTS.

B. THE CONTRACTOR SHALL COMPLY WITH ALL CMR AND BMP REQUIREMENTS.

1.13 CONCRETE

A. APPROVED CONCRETE MIX DESIGN IS REQUIRED PRIOR TO ORDERING AND PLACING CONCRETE.

B. ALL MATERIALS, LABOR, AND METHODS SHALL CONFORM TO ALL APPLICABLE ASTM AND ACI STANDARDS AND REQUIREMENTS. IT IS THE CONTRACTORS RESPONSIBILITY TO INSURE THAT ALL STANDARDS ARE MET, AND TO BE ABLE TO PRODUCE VERIFICATION OF THESE ITEMS UPON REQUEST.

C. THE CONTRACTOR WILL PROVIDE CONCRETE DELIVERY TICKETS TO SPECIFY THE TRUCK'S TIME OF DEPARTURE FROM THE BATCH PLANT AND THE DRUM ROTATION COUNTER NUMBER, AND THAT COPIES ARE PROVIDED TO THE AUTHORITY'S PROJECT MANAGER.

D. THE AUTHORITY'S PROJECT MANAGER, OR OTHER MEMBERS OF THE AUTHORITY OR THEIR DESIGNATED REPRESENTATIVE(S), WILL INSPECT THE PLACEMENT AND CONDITION OF THE STEEL REINFORCING AND WILL OBSERVE CONCRETE PLACEMENT.

E. THE CONTRACTOR IS ADVISED THAT FAILURE TO MEET THIS NOTIFICATION REQUIREMENT WILL RESULT IN ADDITIONAL TESTING AT THE CONTRACTOR'S EXPENSE.

F. THE CONTRACTOR WILL ENGAGE A CERTIFIED TESTING LAB (LAB), APPROVED BY THE AUTHORITY, TO BE ON-SITE DURING DELIVERY AND PLACEMENT OF CONCRETE. THE LAB WILL BE THE SOLE JUDGE OF THE ACCEPTABILITY OF THE CONCRETE ARRIVING AT THE SITE.

G. THE LAB WILL PROVIDE CONCRETE TESTING DURING PLACEMENT AND WILL INSPECT AND CERTIFY REINFORCING STEEL AND FORM WORK PRIOR TO PLACEMENT

H. THE CONTRACTOR WILL VERIFY THAT CONCRETE TESTS INCLUDE TIME OF PLACEMENT, TEMPERATURE, DRUM ROTATION, SLUMP, AND AIR ENTRAINMENT.

I. THE CONTRACTOR WILL VERIFY THAT TIME OF PLACEMENT WILL BE NO GREATER THAN NINETY MINUTES FROM DEPARTURE FROM THE BATCH PLANT. IF CONDITIONS PRECLUDE MEETING THE NINETY MINUTES REQUIREMENT, ALTERNATIVE METHODS WILL BE PROPOSED PROVIDED THAT SUCH ALTERNATIVE.

J. METHODS ARE AT CONTRACTORS' SOLE COST AND IN FULL COMPLIANCE WITH ALL REQUIREMENTS OF LAW AND INDUSTRY STANDARDS.

K. THE CONTRACTOR WILL VERIFY THAT SLUMP IS NO GREATER THAN SPECIFIED BY THE ENGINEER OF RECORD.

L. THE CONTRACTOR SHALL SCHEDULE ALL INSPECTIONS AT THE TESTING LABORATORY, AND INFORM GENERAL DYNAMICS / MOTOROLA WITHIN 24 HOURS OF THE INSPECTION OR TEST. CYLINDERS SPECIMENS WILL BE MADE IN ACCORDANCE WITH ASTM C TESTED IN ACCORDANCE WITH ASTM C 39. TEST AGES OF THE SPECIMENS SHALL BE 3/7/28 DAYS. ONE SET OF SPECIMENS (ONE 3 DAY CYLINDER, ONE 7 DAY CYLINDER, TWO SPARE 28-DAY CYLINDERS, AND ONE SPARE) WILL BE MADE FOR APPROXIMATELY EVERY 50 CUBIC YARDS (38 CUBIC METERS) PLACED. EACH SET OF SPECIMENS WILL BE MOLDED FROM THE SAME BATCH OF CONCRETE AND WILL CONSIST OF ONE CYLINDER TO PROVIDE A 7-DAY COMPRESSIVE TEST (THE EXTRA CYLINDER WILL BE A BACK-UP IN THE EVENT OF AN OBVIOUS DEFECTIVE CYLINDER). SAMPLES REQUIRED ON ALL LA-RICS FOUNDATIONS ARE TO BE INCLUDED IN TESTING AND FINAL REPORTS.

M. ALL CONCRETE FOR THE PROJECT SHALL HAVE A 28-DAY STRENGTH OF 4,000 PSI (UNLESS OTHERWISE SPECIFIED) AND A SLUMP OF 6" MAXIMUM WITH THE MIXTURE PROPORTIONS MEETING ASTM AND ACI REQUIREMENTS. ALL ADMIXTURES AND MATERIALS FOR THE CONCRETE MIXTURE SHALL ALSO CONFORM TO PROPER ASTM REQUIREMENTS.

N. THE CONTRACTOR WILL INSTRUCT THE CONCRETE SUPPLIER TO HAVE AN APPROVED PLASTICIZER ON THE TRUCK TO AID IN THE POURING AND PLACING OF PIERS AND FOUNDATIONS.

O. AIR ENTRAINING AGENT SHALL BE USED IN ANY CONCRETE EXPOSED TO FREEZING TEMPERATURES.

P. THE CONTRACTOR IS RESPONSIBLE FOR ALL EMBEDMENT LOCATIONS, SIZES, AND PROPER ANCHORING TO HOLD THE ITEMS IN PLACE ACCURATELY.

Q. CONTRACTOR WILL SUPPLY AND USE A RELEASING AGENT ON ALL FORMS. ANY ATTACHMENT TO EXISTING CONCRETE AREAS WILL BE DONE WITH SMOOTH DOWELS AT 18" O.C. WITH A MINIMUM 6" EMBEDMENT IN EACH DIRECTION AND AN APPROVED BONDING AGENT TO BE APPLIED TO THE EXISTING SURFACE.

NOTE: ALL INFORMATION IS SUBJECT TO FIELD VERIFICATION. ALL INFORMATION IS CONFIDENTIAL AND NOT FOR PUBLIC DISTRIBUTION WITHOUT EXPRESS CONSENT OF THE LOS ANGELES REGIONAL INTEROPERABLE COMMUNICATIONS SYSTEMS AUTHORITY.

LA-RICS
Los Angeles Regional Interoperable Communications System

[redacted]

GENERAL NOTES
GN2

[redacted]

1.13 CONCRETE (CONTINUE)

R. ALL EXPOSED CONCRETE WILL HAVE A UNIFORM FINISH AND BE SLOPED FOR DRAINAGE OFF THE SURFACE UNLESS OTHERWISE NOTED IN THE PLANS OF SPECIFICATIONS.

S. THE CONTRACTOR SHALL PROTECT THE CONCRETE FROM ANY ADVERSE WEATHER CONDITIONS; PREMATURE DRYING AND MECHANICAL INJURY TO INSURE PROPER CURING.

T. THE CONTRACTOR SHALL BE RESPONSIBLE FOR THE USE AND CONTROL OF ANY MECHANICAL EQUIPMENT TO INSURE THE PROPER PLACEMENT OF THE CONCRETE TO PREVENT ANY VOIDS OR CAPS.

U. THE CONTRACTOR WILL PROVIDE CONCRETE THAT IS MIXED AND PLACED ONLY WHEN THE TEMPERATURE IS AT LEAST FORTY (40) DEGREES F. AND RISING. WHEN TEMPERATURE IS NINETY (90) DEGREES F. OR ABOVE, OR IS LIKELY TO RISE ABOVE NINETY (90) DEGREES F. WITHIN THE TWENTY-FOUR (24) HOUR PERIOD AFTER CONCRETE PLACEMENT, THE CONTRACTOR WILL FOLLOW RECOMMENDATIONS OF ACI 305.

V. ALTERNATIVELY, WHEN THE TEMPERATURE OF THE SURROUNDING AIR IS BELOW FORTY DEGREES (40) F., CONCRETE WILL HAVE A TEMPERATURE BETWEEN SIXTY (60) DEGREES F. AND NINETY (90) DEGREES F. WHEN PLACING CONCRETE, THE CONTRACTOR WILL FOLLOW THE RECOMMENDATIONS OF ACI 306 OR THE LATEST VERSION.

W. THE CONTRACTOR WILL PROVIDE CONCRETE FOR DRILLED FOUNDATIONS THAT IS PLACED WITH A TREMIE HAVING A DIAMETER OF AT LEAST EIGHT TIMES THE MAXIMUM SIZE OF THE AGGREGATE. CONCRETE WILL BE PLACED WITH THE AID OF MECHANICAL VIBRATION EQUIPMENT APPLIED DIRECTLY TO THE CONCRETE FOR THE TOP 10 FEET. THE INTENSITY OF VIBRATION WILL BE SUFFICIENT TO CAUSE FLOW OR SETTLEMENT OF CONCRETE IN PLACE WITHOUT CAUSING SEGREGATION OF THE MIX.

X. ALL REINFORCING STEEL WILL BE NEW DEFORMED BARS, CONFORMING TO ASTM A-615 REFER TO STRUCTURAL SHEETS/NOTES. THE CONTRACTOR WILL PROVIDE CONCRETE THAT IS PLACED CONTINUOUSLY TO AVOID COLD JOINTS. COLD JOINTS ARE NOT PERMITTED AND WILL RESULT IN REJECTION OF THE STRUCTURE BY THE AUTHORITY.

Y. TIME OF PLACEMENT WILL BE NO GREATER THEN NINETY MINUTES FROM DEPARTURE FROM THE BATCH PLAN. DRUM ROTATIONS WILL BE THREE HUNDRED OR LESS. TEMPERATURE WILL BE EIGHTY DEGREES OR LESS. ALTERNATIVE METHODS WILL BE PROPOSED PROVIDED THAT SUCH ALTERNATIVE METHODS ARE AT CONTRACTORS' SOLE COST AND IN FULL COMPLIANCE WITH ALL REQUIREMENTS OF LAW AND INDUSTRY STANDARDS.

Z. CONTRACTOR TO PROVIDE DE-WATERING OF FOUNDATIONS AS NEEDED.

1.14 METALS

A. ALL METAL WORK SHALL BE IN ACCORDANCE WITH THE SPECIFICATION GALVANIZED ASTM A572 FT. 50 UNLESS OTHERWISE NOTED.

B. STRUCTURAL TUBING MEMBERS SHALL CONFORM TO ASTM A500, GRADE B.

C. ALL WELDING SHALL BE DONE USING E70XX ELECTRODES AND WELDING SHALL CONFORM TO AISC AND AWS D1.1. WHERE FILLET WELD SIZES, ARE NOT SHOWN, PROVIDE THE MINIMUM SIZE PER TABLE J2.4 IN THE AISC "MANUAL OF STEEL CONSTRUCTION", 9TH EDITION.

D. BOLTED CONNECTIONS SHALL USE BEARING TYPE GALVANIZED ASTM A325 BOLTS (3/4" DIA.) AND SHALL HAVE A MINIMUM OF TWO BOLTS U.N.O.

E. NON-STRUCTURAL CONNECTIONS FOR HANDRAIL, LADDERS AND STEEL GRATING MAY USE 5/8" DIA. GALVANIZED ASTM A307 BOLTS U.N.O.

F. IF FIELD WELDING IS APPROVED, FOLLOW AWS STANDARDS. SPECIAL INSPECTION IS REQUIRED.

G. ALL WELDING PROCESSES AND WELDING OPERATIONS WILL BE QUALIFIED IN ACCORDANCE WITH AMERICAN WELDING SOCIETY (AWS) STANDARD QUALIFICATION PROCEDURE.

H. SUBMIT 6 SETS OF SHOP DRAWINGS TO THE ARCHITECT/ ENGINEER FOR REVIEW BEFORE FABRICATION/ CONSTRUCTION.

I. ALL EPOXY ANCHORS SHALL USE THE HILTI HIT HY 150 INJECTION ADHESIVE ANCHOR SYSTEM, SIZE AS INDICATED ONE THE PLANS, (ICBO #5193, LARR #25257). OR APPROVED EQUAL, SUBJECT TO APPROVAL BY STRUCTURAL ENGINEER OF RECORD.

J. ALL EXPANSION ANCHORS SHALL BE HILTI KB-TZ ANCHORS, SIZE AS INDICATED ON THE PLANS (ESR-1917) OR APPROVED EQUAL. OR APPROVED EQUAL, SUBJECT TO APPROVAL BY STRUCTURAL ENGINEER OF RECORD.

K. ON SITE WELDING IS NOT PERMITTED, UNLESS PROVIDED WRITTEN APPROVAL BY GENERAL DYNAMICS / MOTOROLA. ANY FIELD WELDING SHALL BE COMPLETED BY A CERTIFIED LICENSED WELDER AND OBSERVED/INSPECTED BY JURISDICTIONAL APPROVED INSPECTOR. ALL WELDS MUST BE TREATED WITH CORROSION RESISTANT PAINT.

L. THE USE OF A36 MODIFIED MATERIAL TO OBTAIN 50 KSI MINIMUM YIELD STRENGTH IS PROHIBITED. UTILIZING MILL CERTIFICATIONS TO OBTAIN MINIMUM YIELD STRENGTHS IS PROHIBITED.

M. THE CONTRACTOR WILL FURNISH ALL MATERIALS TO BE NEW AND OF THE BEST QUALITY AS MEASURED BY THE HIGHEST STANDARDS OF THE TRADE. ALL DEFECTS WILL BE CAUSE FOR REJECTION BY THE AUTHORITY. THE CONTRACTOR WILL HAVE AVAILABLE THE MILL CERTIFICATES FOR ALL MATERIALS FURNISHED AND WILL BE SUBMITTED UPON REQUEST.

1.15 WARRANTIES

A. THE CONTRACTOR SHALL WARRANTY ALL GENERAL WORK FOR A MINIMUM OF 12 MONTHS OR AS STATED ELSEWHERE IN THE CONTRACT.

B. ROOF WARRANTY: ALL WORK ON ROOFS SHALL BE PERFORMED IN FULL COMPLIANCE WITH THE ROOF MANUFACTURER THAT THE WARRANTY REMAINS VALID AFTER CONSTRUCTION IS COMPLETE.

1.16 ANTENNAS AND CABLES

A. THE CONTRACTOR IS RESPONSIBLE FOR THE PROPER STORAGE AND HANDLING OF ALL MATERIALS ONCE THEY HAVE BEEN RELEASED FROM THE WAREHOUSE.

B. INSTALLATION OF ALL MATERIALS SHALL BE DONE IN STRICT ADHERENCE TO MANUFACTURER'S RECOMMENDATIONS INCLUDING. R56 SPEC'S.

C. THE CONTRACTOR SHALL PERFORM THE SWEEP TESTING WITH A WILTRON METAL 350 OR EQUAL, AND PROVIDE TWO COPIES TO GENERAL DYNAMICS / MOTOROLA. THE REQUIREMENTS FOR THE TESTING RESULTS WILL BE ISSUED FROM GENERAL DYNAMICS / MOTOROLA PRIOR TO THE START OF THE PROJECT. THE CONTRACTOR IS TO FILL OUT AN ANTENNA SITE SUBMISSION FORM (SEE PART FOUR) AND (1) COMPLETE SWEEP TEST WITH ANTENNA INFORMATION FORM TO BE LEFT INSIDE SHELTER AT SITE.

D. TOWER TECHNICIANS MUST BE CURRENT ANDREWS AND COMMSCOPE CERTIFIED FOR CABLE CONNECTOR INSTALLATIONS. ALL COAX TO BE USED MUST BE ANDREWS OR COMMSCOPE MANUFACTURED

E. THE FOLLOWING TABLE WILL BE USED TO DETERMINE THE MINIMUM RADIUS OF EACH CABLE (VERIFY WITH MANUFACTURER'S SPECIFICATIONS:

ANDREW BENDING RADIUS

DIAM. OF CABLE	LDF#	RADIUS
1/2"	4	5"
7/8"	5	10"
1-1/4"	6	15"
1-5/8"	7	20"
2-1/4"	12	24"

COMMSCOPE BENDING RADIUS

DIAM. OF CABLE	TYPE	RADIUS
1/2"	FXL780	4"
7/8"	FXL780	8"
1-5/8"	FXL780	15"

F. THE CONTRACTOR SHALL RUN ALL LINES AND CONDUITS IN A NEAT, ORDERLY AND STRAIGHT FASHION PROVIDING ANCHORING AS RECOMMENDED BY THE MANUFACTURER AND/ OR STRUCTURAL ANALYSIS RECOMMENDATIONS TO SUPPORT THE LINES PROPERLY.

G. THE CONTRACTOR WILL ROUTE ALL POWER, SIGNAL, AND TRANSMISSION LINE CABLES ACCORDING TO MOTOROLA R-56 SITE INSTALLATION, GROUNDING, AND LIGHTNING PROTECTION GUIDELINES. CABLES WILL BE APPROPRIATELY SEPARATED BASED ON TYPE TO PREVENT INTERFERENCE.

H. ALL EQUIPMENT WILL PRESENT A NEAT SYMMETRICAL APPEARANCE AND BE INSTALLED IN A HIGHLY STABLE AND RIGID MANNER MEETING LOCAL AND ZONE 4 SEISMIC REQUIREMENTS.

I. THE CONTRACTOR TO PROVIDE ALL REQUIRED CRANES, MANPOWER, VEHICLES AND PERMITS TO SUPPORT INSTALLATION.

1.17 ELECTRICAL

A. THE CONTRACTOR IS RESPONSIBLE FOR ALL PERMITTING, FILING, AND FEES IN CONJUNCTION WITH THE PROJECT.

B. THE CONTRACTOR SHALL SCHEDULE ALL NECESSARY INSPECTIONS WITH THE PROPER AUTHORITIES AND INFORM GENERAL DYNAMICS / MOTOROLA 24-HOURS IN ADVANCE. ALL TICKETS AND INSPECTION VERIFICATIONS WILL BE SUBMITTED TO GENERAL DYNAMICS / MOTOROLA WITHIN THE CLOSEOUT PACKAGE.

C. ALL LABOR AND MATERIAL SHALL CONFORM TO ALL LOCAL, STATE, AND NATIONAL CODES, RULES, REGULATIONS AND STANDARDS.

D. ALL EQUIPMENT, WIRING, AND MATERIALS MUST HAVE A UL LABEL AND INSTALLED PER MANUFACTURER SPECIFICATIONS.

E. ALL WORK SHALL BE DONE BY QUALIFIED AND EXPERIENCED JOURNEYMEN AND PERFORMED IN A WORKMANLIKE MANNER AND SHALL PROCEED IN AN ORDERLY MANNER SO AS NOT TO HOLDUP THE PROGRESS OF THE PROJECT.

F. CONTRACTOR TO VERIFY ALL LINES, FEEDERS, EQUIPMENT, AND DEVICES INSTALLED PER CD'S TO ASSURE PROPER OPERATION (PER NEC NFPA 70) PRIOR TO GENERATOR STATE UP.

G. CONDUITS AND FITTINGS FOR OUTSIDE/ABOVE GROUND APPLICATIONS SHALL BE RIGID CONDUIT AND FITTINGS FOR INSIDE BUILDING RUNS, ABOVE CEILINGS SHALL BE EMT. SUPPORT ALL CONDUITS WITHIN 3 FT. OF ALL JUNCTION BOXES AND AT 8 FT. INTERVALS OR LESS AS NEEDED WITHIN APPROVED ANCHORING DEVICES. ALL CONNECTOR AND COUPLINGS SHALL BE OF THREADED OR COMPRESSION TYPE.

1.17 ELECTRICAL (CONTINUE:)

H. ALL WIRES SHALL BE COPPER; USE OF ALUMINUM CONDUCTORS WILL NOT BE PERMITTED. SEE ELECTRICAL PLANS FOR SIZING AND LOCATIONS. USE PROPER SIZE CONNECTORS PER LOCAL, STATE, AND NATIONAL CODES.

I. CONDUCTOR LENGTHS SHALL BE CONTINUOUS FROM TERMINATION TO TERMINATION WITHOUT SPLICES.

J. PROVIDE PULL BOXES WHERE SHOWN AND WHERE REQUIRED BY CODES AND UTILITY COMPANIES.

K. ALL CONDUIT ROUTES SHALL BE COORDINATED WITH THE MECHANICAL EQUIPMENT TO AVOID LOCATION CONFLICTS. CONTRACTOR SHALL VERIFY ALL LOCATIONS.

L. ALL CONDUITS SHALL BE TAGGED/IDENTIFFIED INSIDE ALL PULL BOXES, J-BOXES, AND CABINETS WITH P-TOUCH TYPE PRINTED LABELS. (1/2" LABEL, WHITE FACE WITH BLACK LETTERING)

M. ALL BREAKERS IN LOAD CENTER SHALL BE IDENTIFIED WITH TYPE WRITTEN LABELS NEATLY PLACED ALONG SIDE OF THE BREAKER.

N. ALL GROUND BARS SHALL BE 4"x1/4"x LENGTH AS NOTED, UNLESS OTHERWISE NOTED AND SHALL BE COPPER AND LARGE ENOUGH TO ACCOMMODATE THE REQUIRED NUMBER OF GROUNDING CONNECTIONS. THE HARDWARE SECURING ALL GROUND BARS SHALL BOND THEM TO THE STRUCTURE TO WHICH THEY ARE FASTENED. ALL FASTENERS SHALL BE STAINLESS STEEL. COPPER SHALL NOT MAKE PHYSICAL CONTACT TO GALVANIZED STEEL STRUCTURE. DOUBLE STACKING LUGS OR "SANDWICHING" NOT PERMITTED.

O. ANY PENETRATIONS MADE BY THE CONTRACTOR THROUGH WALLS, CEILINGS, FLOORS, ROOFS OR ANY OTHER SURFACE SHALL BE CORE DRILLED AND SEALED ACCORDING TO EXISTING FIRE RATING. CONTRACTOR IS RESPONSIBLE TO FIELD VERIFY. REFER TO LOCAL JURISDICTION CODES IF APPLICABLE.

P. THE MATERIALS AND EQUIPMENT INFORMATION ON THESE DRAWINGS ARE BASED ON THE BEST AVAILABLE INFORMATION AT THE TIME THE DRAWINGS ARE ISSUED. CHANGES MAY OCCUR, AND THE CONTRACTOR SHALL VERIFY ALL ITEMS PRIOR TO PLACEMENT, AND MAKE ANY CORRECTIONS WITHOUT FURTHER COST TO [redacted]

Q. ALL EXTERIOR & ABOVE GROUND CONDUITS SHALL BE RIGID GALVANIZED STEEL.

R. ALL CONTRACTORS ARE REQUIRED TO INITIATE COORDINATION WITH EXISTING FACILITY FM DEPARTMENT AND COMPLY WITH ALL LOCAL REQUIREMENTS FOR EACH FACILITY AND IN ACCORDANCE WITH CAL-OSHA GUIDELINES.

1.18 GROUNDING

A. THE CONTRACTOR SHALL VERIFY THE [redacted] THAT ALL CONDUIT SYSTEMS., EQUIPMENT, DEVICES, PANELS, LINES, TRAYS, BRIDGES, PLATFORMS, AND ANY/ ALL ITEMS ARE GROUNDED PROPERLY PER R56 SPECS.

B. THE GROUNDING SYSTEM CONNECTIONS SHALL BE MADE WITH EXOTHERMIC WELDS AND/ OR MECHANICAL TWO-LUG COMPRESSION CONNECTORS AS INDICATED ON PLANS. USE ONLY STAINLESS STEEL SCREWS, BOLTS, WASHERS, AND NUTS FOR FASTENING. ALL FASTENERS SHALL BE STAINLESS STEEL. COPPER SHALL NOT MAKE PHYSICAL CONTACT TO GALVANIZED STEEL STRUCTURE.

C. CLEAN SURFACES THOROUGHLY BEFORE APPLYING GROUND LUGS OR CLAMPS. IF SURFACE IS COATED, THE COATING MUST BE REMOVED DOWN TO THE BARE METAL. AFTER THE COATING HAS BEEN REMOVED, APPLY A NON-CORROSIVE APPROVED COMPOUND TO THE CLEANED SURFACE AND INSTALL LUGS OR CLAMPS. WHERE GALVANIZING IS REMOVED FROM METAL, IT SHALL BE PAINTED OR TOUCHED UP WITH COLD GALVANIZING PAINT SUCH AS GLAVMOX OR EQUAL.

D. ALL CLAMPS, SLEEVES, AND SUPPORTS USED TO SUPPORT OR CHANNEL THE GROUNDING SYSTEM CONDUCTORS AND PVC CONDUITS SHALL BE PVC TYPE NON-CONDUCTIVE. DO NOT USE METAL BRACKETS OR SUPPORTS THAT WOULD FORM A COMPLETE RING AROUND ANY GROUNDING CONDUCTOR.

E. ALL MECHANICAL GROUNDING CONNECTIONS SHALL BE COATED WITH T&B COPPER SHIELD ANTI-CORROSIVE AGENT. NO SUBSTITUTIONS ARE PERMITTED. VERIFY THE PRODUCT WITH [redacted] PRIOR TO USAGE.

F. GROUND, CABLE TRAYS AND RACKS, AND ANY OTHER METALLIC COMPONENTS WITH #2 GROUNDING CONDUCTORS, AND CONNECT TO THE SURFACE-MOUNTED GROUND BARS. CONNECTION DETAILS SHALL BE PERFORMED PER THE MANUFACTURER'S SPECIFICATIONS AND RECOMMENDATIONS UNLESS OTHERWISE SPECIFIED.

G. CLAMP-ON RESISTANCE OR INDUCED FREQUENCY TESTS WITH CLAMP-ON GROUND RESISTANCE TESTER.

H. THE ANTENNA CABLES SHALL BE GROUNDED AT THE TOP AND BOTTOM OF THE VERTICAL RUN FOR LIGHTNING PROTECTION. THE ANTENNA CABLE SHALL BE BONDED TO A COPPER GROUND BAR AT THE LOWER MOST POINT OF A VERTICAL RUN JUST BEFORE IT BEGINS TO BEND TOWARD THE HORIZONTAL PLANE. WIRE RUNS TO GROUND SHALL BE KEPT AS STRAIGHT AND SHORT AS POSSIBLE. THE ANTENNA CABLE SHALL BE GROUNDED JUST BEFORE ENTERING THE SHELTER/EQUIPMENT. ANY TOWERS WITH MULTIPLE BROADCAST TRANSMITTERS PRESENT AND OVER 200 FEET SHALL ALSO BE EQUIPPED WITH ADDITIONAL GROUNDING AT EQUAL INTERVALS.

I. THE CONTRACTOR, UPON COMPLETION OF THE GROUNDING SYSTEM, SHALL SCHEDULE A TEST OF THE SYSTEM. [redacted] REPRESENTATIVE WILL BE INFORMED 48 HOURS IN ADVANCE OF THE TEST.

J. WHEN USING OR CONNECTING TO AN EXISTING GROUND RING. TEST GROUND RING PRIOR TO AND AFTER CONNECTION TO THE EXISTING GROUND RING.

LA-RICS
Los Angeles Regional Interoperable Communications System

[redacted]

GENERAL NOTES
GN3

[redacted]

NOTE: ALL INFORMATION IS SUBJECT TO FIELD VERIFICATION. ALL INFORMATION IS CONFIDENTIAL AND NOT FOR PUBLIC DISTRIBUTION WITHOUT EXPRESS CONSENT OF THE LOS ANGELES REGIONAL INTEROPERABLE COMMUNICATIONS SYSTEMS AUTHORITY.

1.19 DIGGING AND SPILLS:

A. COMPLETE ALL BELOW GRADE TOWER/PAD FOUNDATION, GROUNDING AND CONDUITS FIRST AND REPAIR TO MINIMIZE EROSION AND MUD WASH. (IF APPLICABLE)

B. CONTRACTOR RESPONSIBLE TO CONTACT DIG ALERT, POWER COMPANY AND OTHERS TO OBTAIN UNDERGROUND CLEARANCE TO DIG. CONTRACTOR RESPONSIBLE FOR PRIVATE GROUND PENETRATING RADAR SURVEYS (AS REQUIRED).

C. HAND DIGGING MAY BE REQUIRED FOR THE ICE BRIDGE POSTS NEAR OTHER SERVICES. PLAN ACCORDINGLY.

D. DUST, EROSION AND SPILL MITIGATION REQUIRED THROUGHOUT THE ENTIRE PROCESS USING BEST BUSINESS PRACTICES. ALL ENVIRONMENTAL, EROSION PLANS AND SAFETY LAWS TO BE ADHERED TO AT ALL TIMES.

E. CONTRACTOR TO PROVIDE SILT FENCING AROUND PROJECT WORK AREA TO PREVENT EROSION. REMOVE AND DISPOSE OF AT THE END OF THE PROJECT. (IF APPLICABLE)

F. ANY DISTURBED SOIL/VEGETATION MUST BE RETURNED TO PRE-CONSTRUCTION CONDITION.

G. CONTRACTOR TO CONSTRUCT A TEMPORARY CONCRETE WASHOUT. DEMO AND DISPOSE OF HARDENED CONCRETE AND RESTORE AREA TO ORIGINAL STATE. (IF APPLICABLE)

H. 24HR NOTICE TO GDIT ON OPEN TRENCHES, CONCRETE POURS, ETC.

I. BACKFILL TRENCHES AS CALLED OUT ON THE DRAWINGS OR PER THE UTILITY COMPANY'S CODE. RESTORE ALL DISTURBED AREAS WITH STRAW & SEED. INCLUDE IN TRENCHING COSTS. (IF APPLICABLE)

J. HAUL OFF AND PROPERLY DISPOSE OF EXTRA DIRT/MATERIALS FROM FOUNDATIONS IF IT CAN NOT BE USED ON SITE.

PART 2 – PRODUCTS

2.1 GENERAL

A. GENERAL REQUIREMENTS: ALL MATERIALS AND EQUIPMENT SHALL BE IN ACCORDANCE WITH CONTRACT DOCUMENTS AND STANDARD PRODUCTS OF THE VARIOUS MANUFACTURERS, WITH ALL MATERIALS AND EQUIPMENT TO BE NEW, CLEAN, UNDAMAGED, AND FREE OD DEFECTS AND CORROSION.

B. ACCEPTABLE PRODUCTS: THE PRODUCT OF SPECIFIED OR APPROVED MANUFACTURER WILL BE ACCEPTABLE ONLY WHEN THE PRODUCT COMPLIES TO MEET QA REQUIREMENTS.

C. COMMON ITEMS: WHERE MORE THAN ONE OF ANY SPECIFIC ITEM IS REQUIRED, ALL SHALL BE OF THE SAME TYPE AND MANUFACTURER.

D. UL LISTING: ALL MATERIALS AND EQUIPMENT SHALL BE UNDERWRITERS LABORATORIES (UL) LISTED AND LABELED, WHERE UL STANDARDS AND LISTINGS EXIST FOR SUCH MATERIALS OR EQUIPMENT.

1.18 GROUNDING

A. RACEWAY SIZING: AS REQUIRED BY NEC (MINIMUM) WITH OVERSIZED RACEWAYS AS INDICATED ON DRAWINGS. MINIMUM CONDUIT SIZE: 3/4 INCH, UNLESS INDICATED OTHERWISE.

B. RACEWAY TYPES: RIGID GALVANIZED STEEL CONDUIT, ELECTRICAL METALLIC TUBING (EMT), FLEXIBLE STEEL CONDUIT, LIQUID-TIGHT FLEXIBLE STEEL CONDUIT, SCHEDULE 40 HEAVY WALL, AND SCHEDULE 80 EXTRA HEAVY WALL RIGID NONMETALLIC.

C. FITTINGS: ALL RACEWAY FITTINGS (EXCEPT FOR RIGID NONMETALLIC CONDUIT) TO BE STEEL OR MALLEABLE IRON, AND UL LISTED FOR THE INTENDED APPLICATION. EMT FITTING TO BE COMPRESSION TYPE.

D. OUTLET BOXES (SURFACE MOUNTED): CADMIUM PLATED CAST OR MALLEABLE IRON.

E. PULL AND JUNCTION BOXES AND WIREWAYS: USE AS INDICATED AND REQUIRED. JUNCTION BOXES FOR GENERAL INDOOR USE (DRY LOCATIONS) TO BE OF GALVANIZED CODE GAUGE STEEL CONSTRUCTION MINIMUM 4" SQUARE x 1-1/2" DEEP WITH SCREW-ON COVERS. WIREWAYS TO BE UL LISTED, SHEET STEEL CONSTRUCTION WITH SCREW-ON COVERS. FOR EXTERIOR AND DAMP OR WET INDOOR LOCATIONS, USE BOXES AND WIREWAYS APPROVED FOR SUCH USE.

F. PIPE SLEEVES: RIGID STEEL CONDUIT OR IRON PIPE.

G. CONDUIT SEALS FOR CAST-IN-PLACE CONCRETE APPLICATIONS-ACCEPTABLE MANUFACTURERS: O-Z/ GEDNEY TYPE "FSK"; THUNDERLINE CORPORATION "LINK SEAL" WITH "LINK SEAL WITH SLEEVE" FOR CORE-DRILLED AND PRE-CAST OPENING APPLICATIONS-ACCEPTABLE MANUFACTURERS: O-Z/ GEDNEY TYPE "CSML"; THUNDERLINE CORPORATION "LINK SEAL".

H. SWEEPS: ALL SWEEPS FOR COMMUNICATION EQUIPMENT OR CONCRETE PAD SHALL BE MIN. 24" RADIUS.

2.3 CONDUCTORS – 600 VOLT AND BELOW

A. GENERAL: SINGLE-CONDUCTOR 98% CONDUCTIVITY, ANNEALED, NON-COATED COPPER CONDUCTORS WITH 600-VOLT RATED TYPE "THHN/ THWN " INSULATION.

B. CONNECTORS: NYLON SHELL INSULATED METALLIC SCREW-ON CONNECTORS FOR #14-#10 AWG, AND BOLTED PRESSURE OR COMPRESSION TYPE LUGS AND CONNECTORS WITH INSULATING COVERS FOR #8 AWG AND LARGER.

2.4 HANGERS AND SUPPORTS

A. GENERAL: ALL HANGERS, SUPPORTS, FASTENERS AND HARDWARE SHALL BE HOT DIPPED GALVANIZED OR EQUIVALENT CORROSION RESISTANCE BY TREATMENT, AND SHALL BE MANUFACTURED PRODUCTS DESIGNED FOR THE APPLICATION.

B. TYPES: HANGERS, STRAPS, RISER SUPPORTS, CLAMPS, U-CHANNEL, THREADED RODS, ETC. AS INDICATED OR REQUIRED.

2.5 ELECTRICAL IDENTIFICATION

A. NAME PLATES: LAMINATED PLASTIC WITH MINIMUM 1/4" HIGH BLACK ENGRAVED CHARACTERS ON WHITE BACKGROUND.

B. FASTENERS: DOUBLE SIDED 3/4" ADHESIVE TAPE.

C. UNDERGROUND WARNING TAPE: SIX-INCH WIDE POLYETHYLENE TAPE. PERMANENTLY BRIGHT COLORED WITH CONTINOUS-PRINTED LEGEND INDICATING GENERAL TYPE OF UNDERGROUND LINE BELOW AND "CAUTION". COLORS AS FOLLOWS:

1. RED = ELECTRIC
2. ORANGE = COMMUNICATIONS

D. MARKING PENS: PERMANENT, WATERPROOF, QUICK DRYING BLACK INK. ACCEPTABLE MANUFACTURERS: SANFORD FINE POINT "SHARPIE", OR EQUAL.

E. WIRE TAGS: VINYL OR VINYL-CLOTH SELF-ADHESIVE WRAPAROUND TYPE INDICATING APPROPRIATE CIRCUIT NUMBER, ETC.

2.6 ENCLOSURES

A. DRY LOCATION, INDOOR – NEMA 1.

B. WET LOCATION OR OUTDOOR – NEMA 3R.

C. OTHER – IF APPROVED, 5000 FT. AMSL SITE, HIGH BERAT – NEMA 4R

2.7 GROUNDING

A. SYSTEM DESCRIPTIONS: GROUNDING NETWORK SYSTEM SHALL ESTABLISH AN EARTH-RESISTANCE TO THE REFERENCE GROUND POINT NOT TO EXCEED 5 OHMS FOR BUILDING, CONSISTING OF BONDING OF STRUCTURE AND OTHER METAL OBJECTS INCLUDING GROUNDING ELECTRODES AND INTERCONNECTING CONDUCTORS. THIS SHALL BE PERFORMED WITH CLAMP-ON RESISTANCE OR INDUCED FREQUENCY TEST W/ CLAMP ON GROUND RESISTANCE TESTER.

B. MATERIALS-INDICATED AS FOLLOWING:

1. WATER SERVICE METALLIC PIPE
2. BUILDING STEEL
3. CONDUCTORS: COPPER STRANDED OR SOLID TINNED BARE SIZE AS INDICATED
4. GROUND RODS: 5/8" DIA. x 10'-0" LONG COPPER CLAD GROUND ROD
5. CHEMICAL GROUND RODS: XIT GROUND ROD 10'-0" STRAIGHT SHAFT TYPE
6. COMPRESSION: HYGROUND AS MANUFACTURED BY FCI BURNDY. CONNECTIONS SHALL BE PROTECTED FROM CORROSION AS MANUFACTURED BY ZRC CHEMICAL PRODUCTS CO., AS NEEDED.
7. CONNECTIONS: DOUBLE HOLE LUGS FOR ALL MECHANICAL CONNECTIONS
8. EXOTHERMIC: EXOTHERMIC WELD WITH PROPER MOLDS

2.8 SAFETY SWITCHES

A. GENERAL: HEAVY DUTY HORSEPOWER RATED, FULLY ENCLOSED, FUSIBLE (WITH REJECTION FUSE CLIPS) OR NON-FUSED AS INDICATED, QUICK-MAKE, QUICK BREAK SWITCHING MECHANISM INTERLOCKED WITH COVER AND NEMA 1 ENCLOSURE FOR DRY LOCATIONS, AND NEMA 3R ENCLOSURE FOR OUTDOOR LOCATIONS, UNLESS INDICATED OTHERWISE. SWITCHES TO BE LABELED AS "SUITABLE FOR USE AS SERVICE ENTRANCE EQUIPMENT", WHERE REQUIRED.

B. RATINGS: VOLTAGE, PHASES, AMPERAGES, AND FUSING AS INDICATED.

2.8 SAFETY SWITCHES (CONTINUE)

C. IN THE FUSED CONFIGURATION, SWITCHES SHALL HAVE THE INTERRUPTING CAPACITY OF AT LEAST 100,000 AMPS SYMMETRICAL AT SIX HUNDRED (600) VOLTS WHEN USED WITH CLASS RK5 TIME DELAY CURRENT LIMITING FUSES, AND 200,000 AMPS SYMMETRICAL AT 600 VOLTS WHEN USED WITH RK1 CURRENT LIMITING FUSES.

D. LINE SHIELD GUARDS TO PREVENT CONTACT WITH LIVE PARTS.

E. CONTACTS: SILVER ALLOY: SWITCH BLADES SHALL BE DE-ENERGIZED IN THE OPEN POSITION.

F. LUGS: COMPRESSION 2 HOLE LUGS TO BE USED. INDOOR: WITH INSPECTION WINDOW AND COLOR COORDINATED HEAT SHRINK. OUTDOOR: WITHOUT INSPECTION WINDOW AND COLOR COORDINATED UV RATED HEAT SHRINK.

G. REJECTION FUSE CLIPS: PROVIDE FOR FUSIBLE SWITCHES (30-600A) TO PREVENT INSTALLATION OF CLASS H AND CLASS K NON-CURRENT, LIMITING FUSES.

H. ACCEPTABLE MANUFACTURERS: GENERAL ELECTRIC, SQUARE D TYPE QC, SIEMENS.

2.9 FUSES

A. UL CLASS RK1, 250 VOLT OR 600 VOLT AS REQUIRED FOR SYSTEM VOLTAGE, DUAL ELEMENT, TIME DELAY CURRENT-LIMITING, 200,000 A/C, AMPERE RATINGS AS INDICATED. SIZE AND QUANTITY AS INDICATED ON POWER DIAGRAM.

B. ACCEPTABLE MANUFACTURERS: BUSSMAN "FUSETRON", OR EQUAL BY FERRAZ SHAWMUT.

2.10 CIRCUIT BREAKERS

A. GENERAL: MOLDED CASE WITH THERMAL AND MAGNETIC TRIPS UNLESS INDICATED OTHERWISE. MINIMUM 10,000 AMPS INTERRUPTING CAPACITY, HIGHER RATINGS AS INDICATED OR REQUIRED BY AVAILABLE FAULT CURRENT.

B. CIRCUIT BREAKERS FOR EXISTING EQUIPMENT SHALL BE FROM THE SAME MANUFACTURER AS THE ORIGINAL EQUIPMENT.

2.11 LOAD CENTER/ PANEL BOARDS

A. GENERAL: TWO-ROW CIRCUIT BREAKER WITH MAINS, RATINGS AND BRANCH DEVICES AS INDICATED.

B. MINIMUM 10,000 A/C FOR 208V/ 240V UNLESS OTHERWISE NOTED.

C. LOCKABLE OVER, COPPER BUS.

D. LOAD CENTER SHALL HAVE MAIN CIRCUIT BREAKER (LOCKABLE IN ON & OFF POSITIONS).

E. COPPER GROUND BARS (ALUMINUM COMPONENTS IN ELECTRICAL DEVICES PROHIBITED). ISOLATED NEUTRAL BUS AND FULL SIZE GROUNDING BUS.

F. ACCEPTABLE MANUFACTURERS: GE, SQUARE D TYPE QC, SEIMENS, OR EQUIVALENT.

2.12 DEVICES

A. SWITCHES: 20 AMP, 120-277 VOLTS, A.C. ONLY TOGGLE TYPE, SINGLE POLE, DOUBLE POLE, 3-WAY, OR 4-WAY TIMER STYLE AS INDICATED OR REQUIRED.

B. RECEPTACLES: 20 AMP, 120V, NEMA 5 208V DUPLEX TYPE, FOR INDOOR MOUNTED, USE STAINLESS STEEL COVER. FOR OUTDOOR OR WET LOCATION MOUNTED. USE DEVICE RATED FOR USE. PROVIDE GFCI TYPE WITH SOLID STATE GROUND FAULT SENSING & 6 MA TRIP FOR OUTDOOR OR WET LOCATIONS.

C. AUXILIARY POWER (GENERAL INLET): PROVIDE 3-POLE, 4W, 125/250 VOLT FLANGED INLET, BACKBOX AND CLOSURE PLUG AT EXTERIOR OF BUILDING WALL (APPLETON #AJA2003-200RS WITH MATCHING BACKBOX AND CLOSURE PLUG.)

2.13 CABLE TRAY

A. PROVIDE A COMPLETE CABLE TRAY SYSTEM WITH BENDS, FITTINGS, ACCESSORIES, ETC. AS REQUIRED.

B. DESCRIPTION: ALUMINUM ALLOY CONSTRUCTION. TYPE: LADDER WITH 12" MAXIMUM SPACING. DEPTH: MINIMUM 4". WIDTH: AS INDICATED ON DRAWINGS, (MINIMUM 12" HORIZONTAL RUNS, MINIMUM 6" VERTICAL RUNS). SUPPORT SPAN: 8 FOOT MINIMUM, UNLESS OTHERWISE NOTED. LOADING: 300 POUNDS/ FOOT. RADIUS: 36" MINIMUM, (SMALLER RADIUS MAY BE PERMITTED IF APPROVED BY GENERAL DYNAMICS / MOTOROLA). COVER: VENTILATED .063 ALUMINUM, PROVIDE WHERE INDICATED.

C. ACCEPTABLE MANUFACTURERS: PW INDUSTRIES, B-LINE, COPE, OR EQUAL

2.14 SURGE SUPPRESSION

A. PRODUCTS MANUFACTURED BY ATLANTIC SCIENTIFIC OR EQUAL

B. FURNISHED BY AND INSTALLED BY CONTRACTOR.

NOTE: ALL INFORMATION IS SUBJECT TO FIELD VERIFICATION. ALL INFORMATION IS CONFIDENTIAL AND NOT FOR PUBLIC DISTRIBUTION WITHOUT EXPRESS CONSENT OF THE LOS ANGELES REGIONAL INTEROPERABLE COMMUNICATIONS SYSTEMS AUTHORITY.

LA-RICS
Los Angeles Regional Interoperable Communications System

GENERAL NOTES
GN4

PART 3 – EXECUTIONS

3.1 GENERAL

A. THE INSTALLATION OF ALL WORK SHALL BE IN ACCORDANCE WITH THE INTENT OF THE CONTRACT DOCUMENTS.

B. INSTALLATION REQUIREMENTS: ALL MATERIALS AND EQUIPMENT SHALL BE INSTALLED AS RECOMMENDED BY THE RESPECTIVE MANUFACTURERS, BY MECHANICS EXPERIENCED AND SKILLED IN THEIR TRADE, IN A NEAT AND WORKMANLIKE MANNER IN ACCORDANCE WITH THE STANDARDS OF THE TRADE, AND SO AS NOT TO VOID ANY WARRANTY OF UL LISTING.

C. ADMINISTRATION AND SUPERVISION: ALL WORK SHALL BE PERFORMED UNDER THE CONTRACTOR'S DIRECT SUPERVISION, USING SUFFICIENT AND QUALIFIED PERSONNEL AS NECESSARY TO COMPLETE THE WORK IN ACCORDANCE WITH THE PROGRESS SCHEDULE. THE CONTRACTOR SHALL ASSIGN ONE OR MORE COMPETENT SUPERVISORS WHO SHALL HAVE AUTHORITY TO ACCEPT AND EXECUTE ORDERS AND INSTRUCTIONS, AND WHO SHALL COOPERATE WITH THE CONTRACTORS, THE ENGINEER, AND [redacted] IN ALL MATTERS TO RESOLVE CONFLICTS AND AVOID DELAYS.

D. MINIMUM MOUNTING HEIGHT: INSTALL EXPOSED RACEWAY AND ALL OTHER EQUIPMENT (EG, LIGHTING FIXTURES) WITH NOT LESS THAN 7'–6" CLEAR TO FINISHED FLOOR, UNLESS INDICATED OR APPROVED OTHERWISE, AND EXCLUDING RACEWAY AND EQUIPMENT MOUNTED ON WALLS. MAINTAIN SAFE LAYOUT WITH MINIMUM HEAD ROOM UNLESS ACCESS IS LIMITED.

E. DIMENSIONS AND CLEARANCES: FIELD MEASURE ALL DIMENSIONS AND CLEARANCES AFFECTING THE INSTALLATION OF ELECTRICAL WORK, IN RELATION TO ESTABLISHED DATUM, BUILDING OPENINGS AND CLEARANCES, AND WORK OF OTHER TRADES, AS CONSTRUCTION PROGRESSES.

3.2 EXAMINATION

A. CONDITION VERIFICATION: EXAMINE THE AREAS AND CONDITIONS UNDER WHICH THE WORK IS TO BE PERFORMED, AND IDENTIFY ANY CONDITIONS DETRIMENTAL TO THE PROPER AND TIMELY COMPLETION OF THE WORK. NOTIFY GENERAL DYNAMIC OF FINDINGS WITHIN 24HRS. DO NOT PROCEED UNTIL UNSATISFACTORY CONDITIONS HAVE BEEN CORRECTED.

3.3 COORDINATION

A. GENERAL: SEQUENCE, COORDINATE AND INTEGRATE THE INSTALLATION OF ALL MATERIALS AND EQUIPMENT FOR EFFICIENT FLOW OF WORK, IN CONJUNCTION WITH THE OTHER TRADES. REVIEW THE DRAWINGS FOR WORK OF THE OTHER TRADES, AND REPORT AND RESOLVE ANY DISCOVERED DISCREPANCIES, PRIOR TO COMMENCING WORK.

B. COOPERATION: COOPERATE WITH THE OTHER CONTRACTORS AND INDIVIDUAL DISCIPLINES FOR PLACEMENT, ANCHORAGE, AND ACCOMPLISHMENT OF THE WORK. RESOLVE INTERFERENCE BETWEEN WORK OF OTHER DISCIPLINES OR CONTRACTORS PRIOR TO COMMENCING INSTALLATION.

C. SUPPORTS AND SLEEVES: COORDINATE THE INSTALLATION OF REQUIRED SUPPORTING DEVICES AND SLEEVES TO BE SET IN POURED–IN–PLACE CONCRETE AND OTHER STRUCTURAL COMPONENTS, AS THEY ARE CONSTRUCTED.

D. OBSTACLES AND INTERFERENCE: WHEN INSTALLING EQUIPMENT AND RACEWAYS, PROVIDE OFFSETS, FITTINGS, ACCESSORIES, AND CHANGES IN ELEVATION OR LOCATION AS NECESSARY TO AVOID OBSTACLES AND INTERFERENCE, PER ACTUAL FIELD CONDITIONS.

3.4 EQUIPMENT PROTECTION

A. PROTECT ALL EQUIPMENT, MATERIALS, AND WORK FROM THE WEATHER ELEMENTS, PAINT, MORTAR, CONSTRUCTION DEBRIS AND DAMAGE, UNTIL PROJECT IS SUBSTANTIALLY COMPLETE. REPAIR, REPLACE, CLEAN AND RETURN ORIGINAL CONDITION ALL DAMAGED AREAS, EQUIPMENT, UTILITIES, ETC., AND WORK SO AFFECTED.

3.5 LAYOUT

A. GENERAL: INSTALL MATERIALS AND EQUIPMENT LEVEL AND PLUMB, AND PARALLEL AND PERPENDICULAR TO OTHER BUILDING SYSTEMS AND COMPONENTS, WHERE INSTALLED EXPOSED.

B. SERVICEABILITY: INSTALL EQUIPMENT AND RACEWAYS, ETC. TO READILY FACILITATE SERVICING, MAINTENANCE, AND REPAIR OR REPLACEMENT OF COMPONENTS, AND SO AS TO MINIMIZE INTERFERENCE WITH OTHER EQUIPMENT AND INSTALLATIONS.

C. CLEARANCE: PRIOR TO COMMENCING WORK, VERIFY THAT ALL EQUIPMENT WILL ADEQUATELY FIT AND CONFORM TO THE INDICATED AND CODE REQUIRED CLEARANCES, IN THE SPACES INDICATED ON THE DRAWINGS. IF REARRANGEMENT IS REQUIRED, SUBMIT PLAN AND ELEVATION DRAWINGS OR SKETCHES INDICATING REARRANGEMENT, FOR THE ENGINEER'S APPROVAL. DO NOT REARRANGE WITHOUT EXPRESSED WRITTEN PERMISSION OF THE ENGINEER.

D. RIGHT–OF–WAY: WHEN LAYING OUT WORK, GIVE FIRST PRIORITY TO COMMUNICATIONS WIRING, AND NEXT PRIORITY TO STEAM AND CONDENSATE LINES, SANITARY LINES, DRAIN LINES, FIRE PROTECTION PIPING, AND SHEET METAL DUCT WORK. PROVIDE OFFSETS AS REQUIRED TO AVOID CONFLICTS. RESOLVE ALL CONFLICTS BEFORE COMMENCING INSTALLATION.

3.6 MOUNTING HEIGHTS

A. GENERAL: INDICATED HEIGHTS AREA MEASURED FROM THE CENTER OF THE DEVICE OUTLET BOX TO THE FINISHED FLOOR OR GRADE, UNLESS INDICATED OTHERWISE.

B. DEVICES: SWITCHES – 48" A.F.F. / RECEPTACLES – 18" A.F.F. / THERMOSTAT – 48" A.F.F.

3.7 HOLES SLEEVES AND OPENINGS

A. GENERAL: PROVIDE ALL HOLES, SLEEVES, AND OPENINGS REQUIRED FOR THE COMPLETION OF WORK AND RESTORE ALL DAMAGED SURFACES TO MATCH SURROUNDING SURFACES. MAINTAIN INTEGRITY OF ALL FIRE AND SMOKE RATED BARRIERS USING APPROVED FIRE STOPPING SYSTEMS. WHEN CUTTING HOLES OR OPENINGS, OR INSTALLING SLEEVES, DO NOT CUT, DAMAGE OR DISTURB STRUCTURAL ELEMENTS OR REINFORCING STEEL, UNLESS APPROVED IN WRITING BY THE PROJECT STRUCTURAL ENGINEER.

B. CONDUIT PENETRATIONS: SIZE CORE DRILLED HOLES SO THAT AN ANNULAR SPACE OF NOT LESS THAN 1/4" AND NOT MORE THAN 1" IS LEFT AROUND THE CONDUIT. WHEN OPENINGS ARE CUT IN LIEU OF CORE DRILLED, PROVIDE SLEEVE IN ROUGH OPENING. SIZE SLEEVES TO PROVIDE AN ANNULAR SPACE OF NOT LESS THAN 1/4" AND NOT MORE THAN 1" AROUND THE CONDUIT, PIPE, ETC.. PATCH AROUND SLEEVE TO MATCH SURROUNDING SURFACES.

3.8 RACEWAY SYSTEMS

A. UNLESS INDICATED OTHERWISE, USE RACEWAY TYPES AS FOLLOWS:

1. OUTDOORS, EXPOSED: RIGID GALVANIZED STEEL CONDUIT.

2. LIQUID TIGHT FLEXIBLE STEEL CONDUIT: USE WHERE FLEXIBLE STEEL CONDUIT CONNECTIONS ARE REQUIRED IN DRY, DAMP, WET, OR OILY LOCATIONS, FOR CONNECTIONS TO TRANSFORMERS, VIBRATING EQUIPMENT, EQUIPMENT REQUIRING MINOR ADJUSTMENTS IS POSITIONS, AND FOR FINAL CONNECTIONS TO ALL MOTORS AND SIMILAR EQUIPMENT.

B. RACEWAY ROUTING: AS REQUIRED BY JOB CONDITIONS UNLESS SPECIFIC ROUTES OR DIMENSIONED POSITIONS ARE INDICATED ON THE DRAWINGS. INSTALL TIGHT TO SLAB, BEAMS, AND JOISTS WHEREVER POSSIBLE. ROUTE EXPOSED CONDUIT, AND CONDUIT INSTALLED ABOVE CEILINGS, PARALLEL OR PERPENDICULAR TO WALLS, CEILINGS, AND STRUCTURAL MEMBERS. INSTALL TO MAINTAIN MINIMUM HEADROOM AND TO PRESENT A NEAT APPEARANCE. RUN PARALLEL RACEWAYS TOGETHER WITH BENDS MADE FROM THE SAME CENTERLINE. VERIFY EXACT LOCATIONS OF ALL RACEWAYS, PULL BOXES, AND JUNCTION BOXES. RESOLVE ANY CONFLICTS BEFORE INSTALLATION. DO NOT INSTALL HORIZONTAL CONDUIT RUNS BELOW 7'–6" A.F.F. IN EXPOSED LOCATIONS.

1. DO NOT ROUTE ANY CONDUITS INTO OR THRU, STAIRWAYS, ELEVATOR SHAFTS OR ELEVATOR MACHINE ROOM.
2. CONCEAL CONDUITS ABOVE SUSPENDED CEILINGS WHERE POSSIBLE.
3. COORDINATE ALL CONDUIT STUB UPS WITH ROOF TOP EQUIPMENT LAYOUT.
4. COORDINATE INSTALLATIONS OF CONDUITS, EQUIPMENT, ETC. WITH BUILDING OWNER PRIOR TO COMMENCEMENT OF WORK.

C. RACEWAY INSTALLATION: CUT CONDUIT ENDS SQUARE USING SAW OR PIPE CUTTER AND REAM EACH CUT END SMOOTH. CAREFULLY MAKE ALL CONDUIT BENDS AND OFFSETS SO THAT THE INSIDE DIAMETER OF PIPE IS NOT REDUCED. MAKE BENDS SO THAT LEGS ARE IN THE SAME PLANE. MAKE OFFSETS SO THAT LEGS ARE IN THE SAME PLANE AND PARALLEL PROTECT STUB–UPS FROM DAMAGE, AND CAREFULLY RE–BEND WHEN NECESSARY.

D. FITTINGS: MAKE UP ALL RACEWAY FITTINGS TIGHT SO THAT FINAL INSTALLATION OF RACEWAY, FITTING AND ENCLOSURES CONSTITUTES, A FIRM AND MECHANICAL ASSEMBLY AND A CONTINUOUS ELECTRICAL CONTINUITY. PROVIDE INSULATING BUSHINGS ON CONDUIT TERMINATIONS.

E. PROTECTION: PROTECT ALL RACEWAYS, ENCLOSURES AND EQUIPMENT DURING CONSTRUCTION TO PREVENT ENTRY OF CONCRETE, DEBRIS AND OTHER FOREIGN MATTER. FREE CLOGGED CONDUITS OF ALL OBSTRUCTIONS, OR REPLACE PRIOR TO PULLING WIRE.

F. INSTALL ALL OUTLET PULL AND JUNCTION BOXES RIGIDLY, PLUMB AND LEVEL. SUPPORT AND SECURE BOXES INDEPENDENTLY FROM CONDUITS TERMINATING AT BOX. INSTALL ALL BOXES SO AS TO BE ACCESSIBLE AND SO THAT COVERS MAY BE EASILY REMOVED.

G. PROVIDE CAP TO PREVENT ENTRY OF MATERIALS AND MOISTURE FOR ALL SPARE CONDUITS.

H. CONDUIT SEALS: INSTALL CONDUIT SEAL FOR EACH CONDUIT PENETRATING AT AN EXTERIOR BUILDING WALL, BELOW GRADE (UNLESS PENETRATION IS BELOW LOWEST BUILDING FLOOR SLAB), AND ELSEWHERE AS INDICATED, AND SO AS TO ACHIEVE A SEALED WATERTIGHT INSTALLATION.

3.9 CONDUCTORS – 600 VOLT AND BELOW

A. MINIMUM CONDUCTOR SIZE: ALL BRANCH CIRCUIT WIRING SHALL BE MINIMUM #12 AWG. FEEDER CIRCUIT WIRING SHALL BE MINIMUM #2 AWG UNLESS OTHERWISE NOTED. ALL CONTROL CIRCUIT WIRE SHALL BE MINIMUM #14 AWG, UNLESS INDICATED OTHERWISE. PROVIDE LARGER SIZES, AS INDICATED OR REQUIRED. A FULL SIZED EQUIPMENT GROUNDING CONDUCTOR WILL BE INSTALLED IN POWER AND LIGHTING CONDUITS, (CONDUITS WILL NOT BE USED AS A GROUNDING CONDUIT).

B. IN RACEWAY: INSTALL WIRING IN CONDUIT OR OTHER SPECIFIED RACEWAY, UNLESS INDICATED OTHERWISE. ROMEX, BX, AC AND MC TYPE CABLES ARE NOT ALLOWED.

C. TERMINATIONS: FURNISH AND INSTALL TERMINATIONS INCLUDING LUGS IF NECESSARY TO MAKE ALL ELECTRICAL CONNECTIONS INDICATED OR REQUIRED. EXTERIOR AND SWITCH GEAR TERMINATIONS SHALL HAVE AN ANTIOXIDANT APPLIED. SPRING TYPE WIRE CONNECTORS USED IN EXTERIOR BOXES SHALL BE SILICONE FILLED.

3.10 HANGERS AND SUPPORTS

A. GENERAL: RIGIDLY SUPPORT AND SECURE ALL MATERIALS, RACEWAY AND EQUIPMENT TO BUILDING STRUCTURE USING HANGERS, SUPPORTS AND FASTENERS SUITABLE FOR THE USE, MATERIALS AND LOADS ENCOUNTERED, PROVIDE ALL NECESSARY HARDWARE. PROVIDE CONDUIT SUPPORTS AT MAXIMUM 5 FEET ON CENTER OR PER NEC CODE REQUIREMENTS.

3.10 HANGERS AND SUPPORTS (CONTINUE)

B. OVERHEAD MOUNTING: ATTACH OVERHEAD MOUNTED EQUIPMENT TO STRUCTURAL FRAMEWORK OR SUPPORTING METAL FRAMEWORK. DO NOT MAKE ATTACHMENTS TO STEEL ROOFING, STEEL FLOORING OR CEILING MINERAL TILE.

C. WALL MOUNTING: SUPPORT WALL MOUNTED EQUIPMENT BY MASONRY, CONCRETE BLOCK, METAL FRAMING OR SUB–FRAMING.

D. EXTERIOR WALLS: MOUNT ALL EQUIPMENT LOCATED ON THE INTERIOR OR EXTERIOR BUILDING WALLS, AT LEAST ONE INCH AWAY FROM WALL SURFACE, USING SUITABLE SPACERS.

E. STRUCTURAL MEMBERS: DO NOT CUT, DRILL OR WELD ANY STRUCTURAL MEMBER EXCEPT AS SPECIFICALLY APPROVED BY THE ENGINEER.

F. INDEPENDENT SUPPORT: DO NOT SUPPORT MATERIALS OR EQUIPMENT FROM OTHER EQUIPMENT, PIPING, DUCTWORK, OR SUPPORTS FOR SAME.

G. TEMPORARY CONDITIONS: DO NOT ATTACH TO OR SUPPORT ELECTRICAL WORK FROM REMOVABLE OR KNOCKOUT PANELS OR TEMPORARY WALLS OR PARTITIONS.

H. RACEWAY SUPPORTS: RIGIDLY SUPPORT ALL RACEWAY WITH MAXIMUM SPACING PER NEC, AND SO AS TO PREVENT DISTORTION OF ALIGNMENT DURING PULLING OPERATION. USE APPROVED HANGERS, CLAMPS, AND STRAPS FOR INDIVIDUAL RUNS. DO NOT USE PERFORATED STRAPS OR TIE WIRES. WHERE MULTIPLE PARALLEL RACEWAYS ARE RUN TOGETHER, USE TRAPEZE TYPE HANGER ARRANGEMENT MADE FROM U–CHANNEL AND ACCESSORIES, SUSPENDED BY THREADED RODS, AND ALLOT AT LEAST 25% SPARE CAPACITY FOR FUTURE INSTALLATION OF ADDITIONAL RACEWAYS. RIGIDLY ANCHOR VERTICAL CONDUITS SERVING FLOOR–MOUNTED OR "ISLAND" TYPE EQUIPMENT MOUNTED AWAY FROM WALL WITH METAL BRACKET OR RIGID STEEL CONDUIT EXTENSION SECURED TO FLOOR.

I. MISCELLANEOUS SUPPORTS: PROVIDE ANY ADDITIONAL STRUCTURAL SUPPORT STEEL BRACKETS, ANGLES, FASTENERS AND HARDWARE AS REQUIRED TO ADEQUATELY SUPPORT ALL ELECTRICAL MATERIALS AND EQUIPMENT.

J. ONE HOLE STRAPS SHALL NOT BE USED FOR CONDUITS LARGER THAN 3/4 INCH.

K. NEW HANGERS AND SUPPORT SYSTEMS SHALL MEET NPC4 PERFORMANCE RATINGS FOR SEISMIC BRACING.

3.11 EQUIPMENT CONNECTIONS

A. VERIFICATION: OBTAIN AND REVIEW SHOP DRAWINGS, PRODUCT DATA AND MANUFACTURER'S INSTRUCTIONS FOR EQUIPMENT FURNISHED BY OTHERS. EXAMINE ACTUAL EQUIPMENT TO VERIFY PROPER CONNECTION LOCATIONS AND REQUIREMENTS.

B. ROUGH–IN: PROVIDE ALL REQUIRED CONDUIT, BOXES, FITTINGS, WIRES, CONNECTORS, AND MISCELLANEOUS ACCESSORIES, ETC., AS NECESSARY TO ROUGH IN THE MAKE FINAL CONNECTIONS TO ALL EQUIPMENT REQUIRING ELECTRICAL CONNECTIONS. IN GENERAL, MOTORS AND EQUIPMENT SHALL BE WIRED IN CONDUIT TO A JUNCTION BOX (OR SAFETY SWITCH) NEAR THE UNIT, AND FROM THERE TO THE UNIT IN FLEXIBLE METAL OR LIQUID TIGHT FLEXIBLE STEEL CONDUIT.

C. CONNECTIONS: PROVIDE PROPERLY SIZED OVERLOAD AND SHORT CIRCUIT PROTECTION FOR ALL EQUIPMENT CONNECTED, WHETHER FURNISHED UNDER THIS CONTRACT OR BY OTHERS. VERIFY PRIOR CONNECTIONS WITH MANUFACTURER'S PUBLISHED DIAGRAMS AND COMPLY WITH SAME. VERIFY THAT EQUIPMENT IS READY FOR ELECTRICAL CONNECTIONS, WIRING AND ENERGIZATION, PRIOR TO PERFORMING SAME.

D. CONTROL WIRING: PROVIDE ALL CONTROL WIRING TO REMOTE DEVICES OR EQUIPMENT, AS INDICATED OR REQUIRED. MODIFY EQUIPMENT CONTROL WIRING, INSTALL OR DISCONNECT JUMPERS, ETC., AS REQUIRED.

3.12 IDENTIFICATION

A. GENERAL: LOCATE NAME PLATE MARKING, OR OTHER IDENTIFICATION MEANS ON OUTSIDE OF EQUIPMENT OR BOX FRONT COVERS WHEN ABOVE CEILINGS AND WHEN IN MECHANICAL OR ELECTRICAL EQUIPMENT ROOMS OR OTHER UNFINISHED AREAS, AND ON INSIDE OF FRONT COVER WHEN IN FINISHED ROOMS/ AREAS. USE CONTRACT DOCUMENT DESIGNATIONS FOR IDENTIFICATION UNLESS OTHERWISE NOTED.

B. NAMEPLATES: PROVIDE NAME PLATE ENGRAVED WITH EQUIPMENT DESIGNATION FOR EACH SAFETY SWITCH, PANEL BOARD, TRANSFORMER, MOTOR STARTER, AND ALL OTHER EQUIPMENT, ETC. USING LAMINATED PLASTIC WITH WHITE BACK GROUND & BLACK LETTERING.

C. UNDERGROUND WARNING TAPE: DURING TRENCH BACK FILLING FOR EACH UNDERGROUND ELECTRICAL, TELEPHONE, SIGNAL AND COMMUNICATIONS LINE, PROVIDE A CONTINUOUS UNDERGROUND WARNING TAPE LOCATED DIRECTLY ABOVE LINE, AT SIX TO EIGHT INCHES BELOW FINISHED GRADE.

D. MARK EACH JUNCTION AND PULL BOX INDICATING SOURCE DESIGNATION AND CIRCUIT NUMBER(S) FOR THE ENCLOSED CONDUCTORS USING LAMINATED PLASTIC WITH WHITE BACK GROUND & BLACK LETTERING.

E. ALL CONDUITS SHALL BE TAGGED/IDENTIFIED INSIDE ALL PULL BOXES, J–BOXES, AND CABINETS WITH P–TOUCH TYPE PRINTED LABELS. (1/2" LABEL, WHITE FACE WITH BLACK LETTERING.)

F. LOAD CENTER CIRCUIT DIRECTORIES: AT COMPLETION OF PROJECT, ACCURATELY COMPLETE EACH PANEL BOARD CIRCUIT DIRECTORY CARD, IDENTIFYING LOAD SERVED OR "SPARE" OR "SPACE" FOR EACH CIRCUIT POLE. WHEN MODIFYING, ADDING, OR DELETING CIRCUITS AT AN EXISTING PANEL BOARD, UPDATE THE EXISTING (OR PROVIDE NEW) CIRCUIT DIRECTORY CARE TO ACCURATELY REFLECT FINAL CONDITIONS.

LA-RICS
Los Angeles Regional Interoperable Communications System

GENERAL NOTES
GN5

NOTE: ALL INFORMATION IS SUBJECT TO FIELD VERIFICATION. ALL INFORMATION IS CONFIDENTIAL AND NOT FOR PUBLIC DISTRIBUTION WITHOUT EXPRESS CONSENT OF THE LOS ANGELES REGIONAL INTEROPERABLE COMMUNICATIONS SYSTEMS AUTHORITY.

3.13 CHECKOUT, TESTING AND ADJUSTING

A. POWER CONDUCTORS: CONTRACTOR SHALL CONDUCT A CONTINUITY & INSULATION TEST ON CONDUCTORS BETWEEN SERVICE DISCONNECT SWITCH & POWER CABINET.

B. GROUNDING – CLAMP–ON RESISTANCE OR INDUCED FREQUENCY TESTS WITH CLAMP–ON GROUND RESISTANCE TESTER [redacted] R56 SPECIFICATIONS)

3.14 SYSTEM DEMONSTRATION

A. INSTRUCT [redacted] REPRESENTATIVES IN THE STARTUP, OPERATION AND MAINTENANCE OF ALL ELECTRICAL SYSTEMS AND EQUIPMENT AS REQUESTED BY [redacted] REPRESENTATIVE.

3.15 CLEANING AND TOUCH –UP PAINTING

A. GENERAL: PERIODICALLY REMOVE FROM THE PROJECT SITE, ALL WASTE, RUBBISH AND CONSTRUCTION DEBRIS ACCUMULATED FROM CONSTRUCTION OPERATIONS. THE PREMISES SHALL BE LEFT FREE OF ANY DEBRIS AND UNUSED CONSTRUCTION MATERIALS PRIOR TO FINAL ACCEPTANCE.

B. ELECTRICAL EQUIPMENT: REMOVE ALL DUST, DIRT, DEBRIS, MORTAR, WIRE SCRAPS, RUST, AND OTHER FOREIGN MATERIALS FROM THE INTERIOR AND EXTERIOR OR ALL ELECTRICAL EQUIPMENT AND ENCLOSURES, AND WIPE DOWN. CLEAN ACCESSIBLE CURRENT CARRYING ELEMENTS AND INSULATORS PRIOR TO ENERGIZING.

C. TOUCH–UP PAINTING: RESTORE AND REFINISH TO ORIGINAL CONDITION ALL SURFACES OR ELECTRICAL EQUIPMENT THAT IS SCRATCHED, MARRED AND/OR DENTED DURING SHIPPING, HANDLING, OR INSTALLATION. REMOVE ALL RUST, AND PRIME AND PAINT AS RECOMMENDED BY MANUFACTURER.

3.16 COAXIAL CABLE INSTALLATION

A. THE COAXIAL CABLE SIZE SHALL BE AS SHOWN ON DRAWINGS. (REFERENCE PAGE A5)

B. COAXIAL CABLE SUPPORTS

1. SUPPORT COAXIAL CABLES INSIDE MONOPOLES WITH "KELLEM" GRIP TYPE PRODUCTS.

2. SECURE AND SUPPORT COAXIAL CABLES ON OPEN WAVEGUIDES STRUCTURAL TOWERS.

3. SECURE AND SUPPORT COAXIAL CABLES ON ICE BRIDGES AS INDICATED ON DRAWINGS.

C. COAXIAL CABLE GROUNDING

1. THE COAXIAL CABLES SHALL BE GROUNDED TO TOWER STEEL OR GROUND BAR AT THE ANTENNAS USING THE GROUNDING KITS AS SPECIFIED ON THE DRAWINGS.

2. THE COAXIAL CABLES SHALL BE GROUNDED TO A GROUND BAR AT THE BOTTOM OF THE TOWER OR MONOPOLE USING THE KITS SPECIFIED ON THE DRAWINGS.

3. THE COAXIAL CABLES SHALL BE GROUNDED TO A GROUND BAR AT THE BULKHEADS USING THE GROUNDING KITS AS SPECIFIED ON THE DRAWINGS.

4. THE COAXIAL CABLES SHALL BE GROUNDED ON ALL TOWERS AT A MINIMUM OF EVERY 200' UP THE TOWER.

3.17 TELEPHONE SERVICE

A. LA–RICS WILL ORDER AND INSTALL THE T–1 SERVICE.

3.18 ELECTRICAL SERVICE

A. GENERAL: ARRANGE WITH THE UTILITY COMPANY AND LA–RICS FOR A TIMELY INSTALLATION OF THE TEMPORARY ELECTRIC SERVICE (IF REQUIRED) AND PERMANENT ELECTRIC SERVICES. COMPLY WITH AND COORDINATE ALL REQUIREMENTS OF THE UTILITY COMPANY.

B. CONTRACTOR WILL COORDINATE WITH ELECTRICAL UTILITY SERVICE PROVIDER FOR ALL INSPECTIONS AN METER SET.

C. ARRANGE FOR AN INSPECTION OF THE ELECTRICAL SERVICE BY THE AUTHORITY HAVING JURISDICTION. OBTAIN A CERTIFICATE OF INSPECTION IF POSSIBLE FROM THE JURISDICTION. FURNISH A COPY OF THE CERTIFICATE TO [redacted] WITH THE HANDOFF PACKAGE AND A COPY OF THE UTILITY COMPANY.

E. COORDINATE METER SOCKET REQUIREMENTS WITH THE ELECTRIC UTILITY AS REQUIRED

F. GROUNDING: PROVIDE GROUNDING ELECTRODE SYSTEM FOR THE SERVICE, PER THE NEC, PER UTILITY COMPANY REQUIREMENTS, AND AS INDICATED.

G. SHORT CIRCUIT RATINGS: PROVIDE EQUIPMENT WITH HIGHER FAULT CURRENT RATINGS AS NEEDED TO MATCH UTILITY COMPANY AVAILABLE FAULT CURRENT.

ART 4 – TESTING

4.1 PRELIMINARY INSPECTION

A. PRIOR TO TESTING, CONTRACTOR WILL PERFORM INSPECTION OF ANTENNA AND COAXIAL SYSTEM AND RECORD FINDINGS ON "ANTENNA INSPECTION FORM". ALL ITEMS SHOULD BE LISTED AS COMPLETE ON THIS FORM PRIOR TO ANTENNA SYSTEM TESTING.

4.2 EQUIPMENT

A. ALL TEST EQUIPMENT SHALL BE CALIBRATED PER MANUFACTURER SPECS. CALIBRATION CERTIFICATES WILL BE PROVIDED TO [redacted] THIS SHALL INCLUDE BUT NOT LIMITED TO COAX SWEEPS AND GROUNDING.

4.3 PARAMETERS

A. ALL COAXIAL ANTENNA SYSTEMS TO MEET [redacted] SWEEP TEST PROCEDURES.

4.4 NOTIFICATION

A. CONTRACTOR SHALL NOTIFY [redacted] DESIGNATED REPRESENTATIVE A MINIMUM OF 24 HOURS PRIOR TO ANTENNA SYSTEMS TESTING.

4.5 AZIMUTH VERIFICATION

A. PRIOR TO TESTING, CONTRACTOR SHALL VERIFY THAT ALL AZIMUTHS AND DOWN TILTS ARE TRUE. CONTRACTOR SHALL ENSURE THAT ALL CONNECTORS HAVE BEEN INSTALLED TO THE SPECIFIED TORQUE VALUES (IF APPLICABLE).

4.6 DELIVERY

A. CONTRACTOR SHALL ISSUE 3 HARD AND 1 SOFT PACKAGES TO THE GDIT DESIGNATED REPRESENTATIVE AND LEAVE 1 COPY INSIDE THE SHELTER AFTER SITE HAS BEEN ACCEPTED. MUST BE COMPLETED WITHIN 5 DAYS.

PART 5 – COLOR CODES:

A. REFER TO PAGE A5, DETAIL 01 FOR COLOR CODE TABLE

B. LAMINATED PLASTIC TAGS REQUIREMENTS:

1. WHITE BACKGROUND WITH BLACK LETTERING
2. SECURE TAGS WITH STAINLESS STEEL TIES
3. TAGS SHALL BE STAMPED ON ONE SIDE ONLY
4. TAGS STAMPING SHALL BE AS ILLUSTRATED BELOW WITH TEXT HEIGHT OF 5/16" OR LARGER
5. TAGS TO BE LOCATED WITHIN 12" OF MAIN COAX TO ANTENNA JUMPER CONNECTION AND INSIDE SHELTER ENTRY PORT.

LA-RICS
Los Angeles Regional Interoperable Communications System

[redacted]

GENERAL NOTES
GN6

NOTE: ALL INFORMATION IS SUBJECT TO FIELD VERIFICATION. ALL INFORMATION IS CONFIDENTIAL AND NOT FOR PUBLIC DISTRIBUTION WITHOUT EXPRESS CONSENT OF THE LOS ANGELES REGIONAL INTEROPERABLE COMMUNICATIONS SYSTEMS AUTHORITY.

PART 6 – CONTRACTOR DELIVERABLES

A. THE CONTRACTOR SHALL CARRY ON HIS WORK IN ACCORDANCE WITH ALL GOVERNING NATIONAL, STATE, COUNTY AND LOCAL CODES, AS WELL AS, OSHA REGULATIONS.

B. TESTING OF CAST–IN–PLACE CONCRETE, STRUCTURAL, STEEL AND ANY OTHER MATERIAL USED SHALL BE AS REQUIRED BY AND IN ACCORDANCE WITH LOCAL REGULATIONS.

C. THE GROUNDING SYSTEM FOR EACH SITE SHALL BE TESTED FOR A GROUND RESISTANCE OF 5 OHMS. ONE OF THE THREE TESTS SHALL BE USED: IEEE FALL – OF – POTENTIAL TEST. AN APPROVED CLAMP ON TEST, OR A DIRECT METHOD (TWO–TERMINAL) "CONTINUITY" TEST. THE FALL – OF – POTENTIAL TEST IS THE PREFERRED TESTING METHOD AND SHALL BE USED WHENEVER POSSIBLE. ANY GROUND RESISTANCE OF GREATER THAN 5 OHMS BUT LESS THAN 25 OHMS SHALL BE REVIEWED BY LA–RICS AUTHORITY AND AGREED UPON WITH [redacted] ON A CASE–BY–CASE BASIS.

D. THE CONTRACTOR SHALL SUBMIT AN ANTENNA SWEEP TEST INCLUDING THREE (3) HARD COPIES OF ALL SWEEP GRAPHICS AND SITE SUBMISSION FORMS AND ONE (1) SOFT COPY (DATABASE FILE) THE SOFT COPY SHALL BE CONTAINED ON A CD/DVD. THE FILE SHALL BE NAMED USING THE SITE NUMBER AND THE THREE LETTER EXTENSION OF THE ELECTRONIC FILE. ANTENNA SWEEPS SUPPLIED BY MFGR.–SWEEP TEST RESULTS THAT INCLUDE:

1. INSERTION LOSS SWEEP
2. LINE LENGTH SWEEP
3. RETURN LOSS OF LINE SWEEP
4. ANTENNA RETURN LOSS SWEEP
5. RETURN LOSS SYSTEM SWEEP (THROUGH ANTENNA)
6. DTF SWEEP THROUGH THE SYSTEM INCLUDING ANTENNA

E. AS–BUILT INFORMATION: TWO (2) COPIES OF A REPORT CONTAINING A DESCRIPTION OF THE TOWER/ MONOPOLE, SKETCHES AND RED–LINED CONSTRUCTION DRAWINGS SHALL BE SUBMITTED. THE MAXIMUM SIZE OF ANY DRAWING IN THE REPORT SHALL BE 11"x17". THE COVER SHEET OF THE REPORT SHALL CONTAIN THE SITE NAME AND SITE NUMBER. ALSO INCLUDED IN THIS REPORT SHALL BE RED–LINED RF INFORMATION.

F. CONTRACTOR SHALL HAVE 72 HOURS TO COMPLETE PUNCH–LIST ITEMS FOUND INCOMPLETE OR INADEQUATE BY LA–RICS AUTHORITY DURING SITE COMPLETION WALK AND IN TURN TO [redacted]

G. ONE ORIGINAL OF EACH OF THE FOLLOWING SHALL BE PROVIDED TO [redacted] UPON COMPLETION OF THE PROJECT:

1. CERTIFICATE OF OCCUPANCY OR COMPLETION FROM JURISDICTION (IF AVAILABLE)
2. ALL INSPECTIONS SIGN OFFS
3. BUILDING AND ELECTRICAL PERMITS
4. RELEASE OF WAIVERS & LIENS
5. ANTENNA PACKETS (EQUIPMENT INFORMATION, PAPERS, ETC)
6. WARRANTIES
7. SITE CHECKLIST PUNCH LIST COMPLETION AND SIGNED
8. ANTENNA STRUCTURE SUPPORT SPECIFICATIONS.
9. ANTENNA STRUCTURE REGISTRATION.
10. ANTENNA SPECIFICATIONS, COAX TESTING REPORT. RETURN LOSS SHEET
11. COMPACTION TEST REPORT
12. CONCRETE PLACEMENT REPORT
13. ANTENNA DIAGRAMS/MOUNTING DETAILS.
14. EQUIP/CABLE LABELING.
15. SITE SPECIFIC ACCEPTANCE TEST RESULTS.
16. SITE FINAL PHOTOS (BEFORE AND AFTER).
17. SITE CONSTRUCTION PHOTOS (PER CHECKLIST REQUIREMENT)
18. ALL SITE FINAL INSPECTION – BUILDING, ELECTRICAL, ETC.
19. GROUND RESULT REPORT (BEFORE ELECTRICAL NEUTRAL ATTACHMENT & AFTER NEUTRAL ATTACHMENT) – 5 OHMS OR LESS
20. AS–BUILT DRAWINGS.
21. MILL CERTS FOR ALL STEEL
22. ANTENNA HEIGHT CERTIFICATION REPORT
23. ANTENNA AZIMUTH DATA. (PER DETERMINED METHOD)
24. RET TILT INFORMATION AS CLARIFIED BY [redacted] SCREENSHOTS W/ NAMING TO BE PROVIDE PER [redacted]

H. ALL PERMITS ARE TO BE ON–SITE AT ALL TIMES, INCLUDING DURING AND AFTER CONSTRUCTION.

ABBREVIATIONS & LEGEND

A/C	AIR CONDITIONING
ADJ.	ADJUSTABLE
AFF	ABOVE FINISH FLOOR
APPROX.	APPROXIMATELY
ASTM	AMERICAN SOCIETY FOR TESTING AND MATERIALS
AWG	AMERICAN WIRE GAUGE
BLDG.	BUILDING
BLK.	BLOCK
BMR	BASE MOBILE RADIO
B/S	BUILDING STANDARD
CLG	CEILING
CLR.	CLEAR
CONC.	CONCRETE
CONST.	CONSTRUCTION
CONT.	CONTINUOUS
DBL.	DOUBLE
DIA., ø	DIAMETER
DIAG.	DIAGONAL
DIM.	DIMENSION
DN	DOWN
DTL, DETL	DETAIL
DWG.	DRAWING
E	EAST
EA.	EACH
EL, ELEV	ELEVATION
ELECT	ELECTRICAL
EQ.	EQUAL
EQUIP.	EQUIPMENT
E.W.	EACH WAY
EXIST.	EXISTING
EXT	EXTERIOR
(E)	EXISTING
FIN.	FINISH
FLUOR.	FLUORESCENT
FLR	FLOOR
FT.	FOOT
FG	FINISH GRADE
FS	FINISH SURFACE
GA.	GAUGE
GALV	GALVANIZE(D)
CONTRACTOR	GENERAL CONTRACTOR
GND, GRND	GROUND
GWB	GYPSUM WALL BOARD
GYP. BD.	GYPSUM BOARD
HARD'WD	HARDWOOD
HORIZ.	HORIZONTAL
HR	HOUR
HT.	HEIGHT
HVAC	HEATING, VENTING AND AIR CONDITIONING
I.D.	INSIDE DIA.
IN.	INCH
INFO	INFORMATION
INSUL.	INSULATION
INT.	INTERIOR
LB(S)	POUND(S)
MAX	MAXIMUM
MECH	MECHANICAL
MET, MTL	METAL
MFR.	MANUFACTURER
MGR	MANAGER
MIN	MINIMUM
MISC	MISCELLANEOUS
N	NORTH
NA	NOT APPLICABLE
NG	GROUND SPOT ELEVATION
NIC	NOT IN CONTRACT
NTS	NOT TO SCALE
(N)	NEW
OC, o/c	ON CENTER
OD	OUTSIDE DIAMETER
OPG.	OPENING
OPP	OPPOSITE
(P)	PROPOSED
PLYWD.	PLYWOOD
PR	PAIR
PROJ	PROJECT
PROP	PROPERTY
PT	PRESSURE TREATED
REQ'D	REQUIRED
RM	ROOM
R.O.	ROUGH OPENING
S	SOUTH
SHT	SHEET
SIM.	SIMILAR
SPEC.	SPECIFICATION
SQ	SQUARE
SS	STAINLESS STEEL
STL.	STEEL
STRUCT.	STRUCTURAL
SUSP.	SUSPENDED
S.V.	SHEET VINYL
THRU	THROUGH
TNND	TINNED
T.O.C.	TOP OF CURB
T.O.M.	TOP OF MASONRY
TYP	TYPICAL
TOW	TOP OF WALL
UBC	UNIFORM BUILDING CODE
UNO	UNLESS NOTED OTHERWISE
VERT.	VERTICAL
VIF	VERIFY IN FIELD
VT	VINYL TILE
W	WEST
W/	WITH
WIN	WINDOW
W/O	WITHOUT
W.P.	WATERPROOF
∡	ANGLE
&	AND
℄	CENTER LINE
ℙ	PROPERTY LINE
@	AT
#	NUMBER

1 REVISION	100 ROOM NUMBER	01 / D–501 SECTION REFERENCE
1 KEY NOTES	1 KEYED NOTES	12.14°E MAGNETIC NORTH — MAGNETIC NORTH ARROW
01 / D–501 DETAIL REFERENCE	01 / D–501 ELEVATION REFERENCE	
SECTION REFERENCE	DESCRIPTION — ELEVATION	
LAT/LONG COORDINATES	NG 1234.5 ELEVATION POINT	

LA-RICS
Los Angeles Regional Interoperable Communications System

[redacted]

GENERAL NOTES
GN7

NOTE: ALL INFORMATION IS SUBJECT TO FIELD VERIFICATION. ALL INFORMATION IS CONFIDENTIAL AND NOT FOR PUBLIC DISTRIBUTION WITHOUT EXPRESS CONSENT OF THE LOS ANGELES REGIONAL INTEROPERABLE COMMUNICATIONS SYSTEMS AUTHORITY.

[redacted]

Vicinity Map

Title Report

THIS SURVEY WAS COMPLETED WITHOUT THE BENEFIT OF A TITLE REPORT.
PREPARED BY:
ORDER NO.:
DATED:

Legal Description

[redacted]

Assessor's Parcel No.

[redacted]

Easements

NOT AVAILABLE

Access Easement/Lease Area

TO BE DETERMINED

Geographic Coordinates at Proposed Monopole

1983 DATUM-[redacted]
ELEVATION = 182.9 FEET ABOVE MEAN SEA LEVEL

CERTIFICATION:
THE LATITUDE AND LONGITUDE SHOWN ABOVE ARE ACCURATE TO WITHIN +/- 15 FEET HORIZONTALLY AND THAT THE ELEVATIONS SHOWN ABOVE ARE ACCURATE TO WITHIN +/- 3 FEET VERTICALLY. THE HORIZONTAL DATUM (GEOGRAPHIC COORDINATES) IS IN TERMS OF THE NORTH AMERICAN DATUM OF 1983 (NAD 83) AND IS EXPRESSED IN DEGREES (°), MINUTES (') AND SECONDS ("), TO THE NEAREST HUNDREDTH OF A SECOND. THE VERTICAL DATUM (ELEVATIONS) IS IN TERMS OF THE NORTH AMERICAN VERTICAL DATUM OF 1988 (NAVD 88) AND IS DETERMINED TO THE NEAREST TENTH OF A FOOT.

Basis of Bearings

THE STATE PLANE COORDINATE SYSTEM OF 1983 (NAD 83), CALIFORNIA ZONE 5.

Bench Mark

THE CALIFORNIA SPATIAL REFERENCE CENTER C.O.R.S "ELSC", ELEVATION = 318.67 FEET (NAVD 88).

Date of Survey

[redacted]

Lease Area Detail

SCALE: 1"=10'

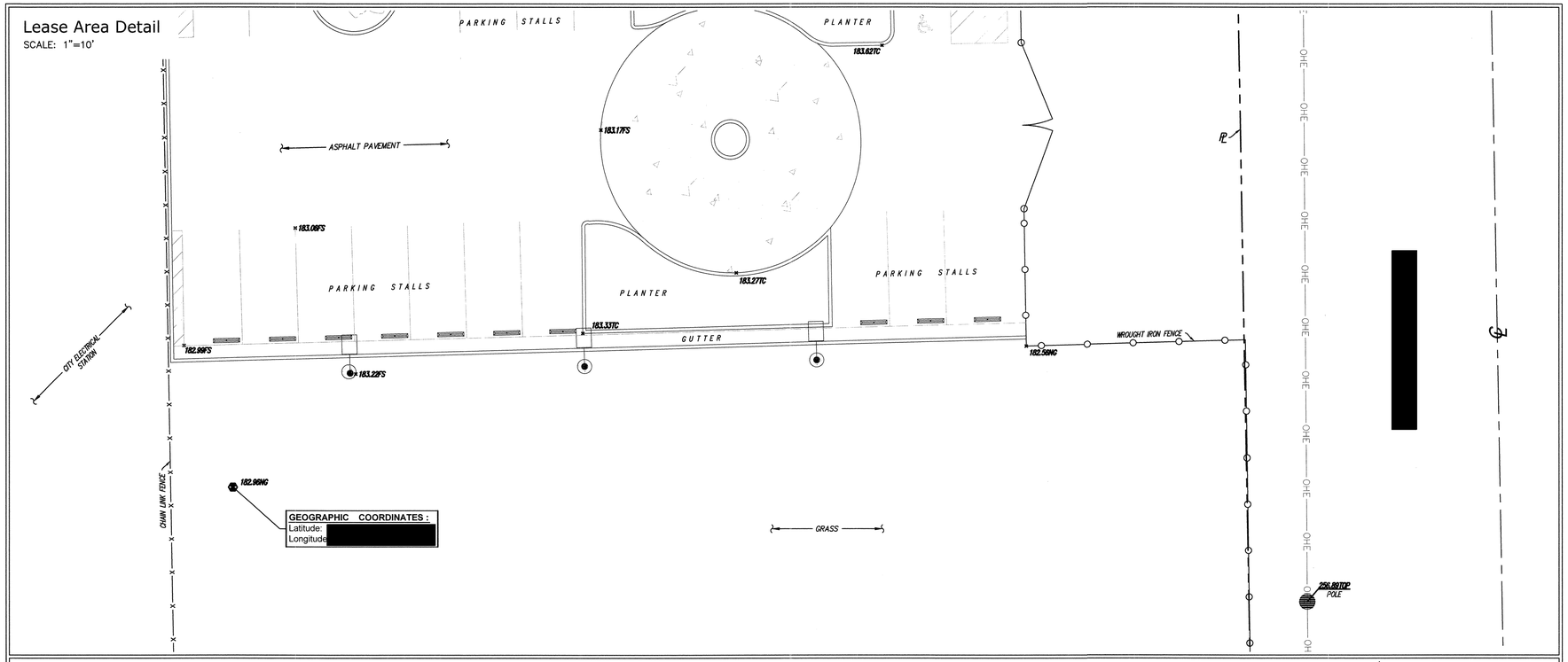

Boundary Detail

SCALE: 1"=60'

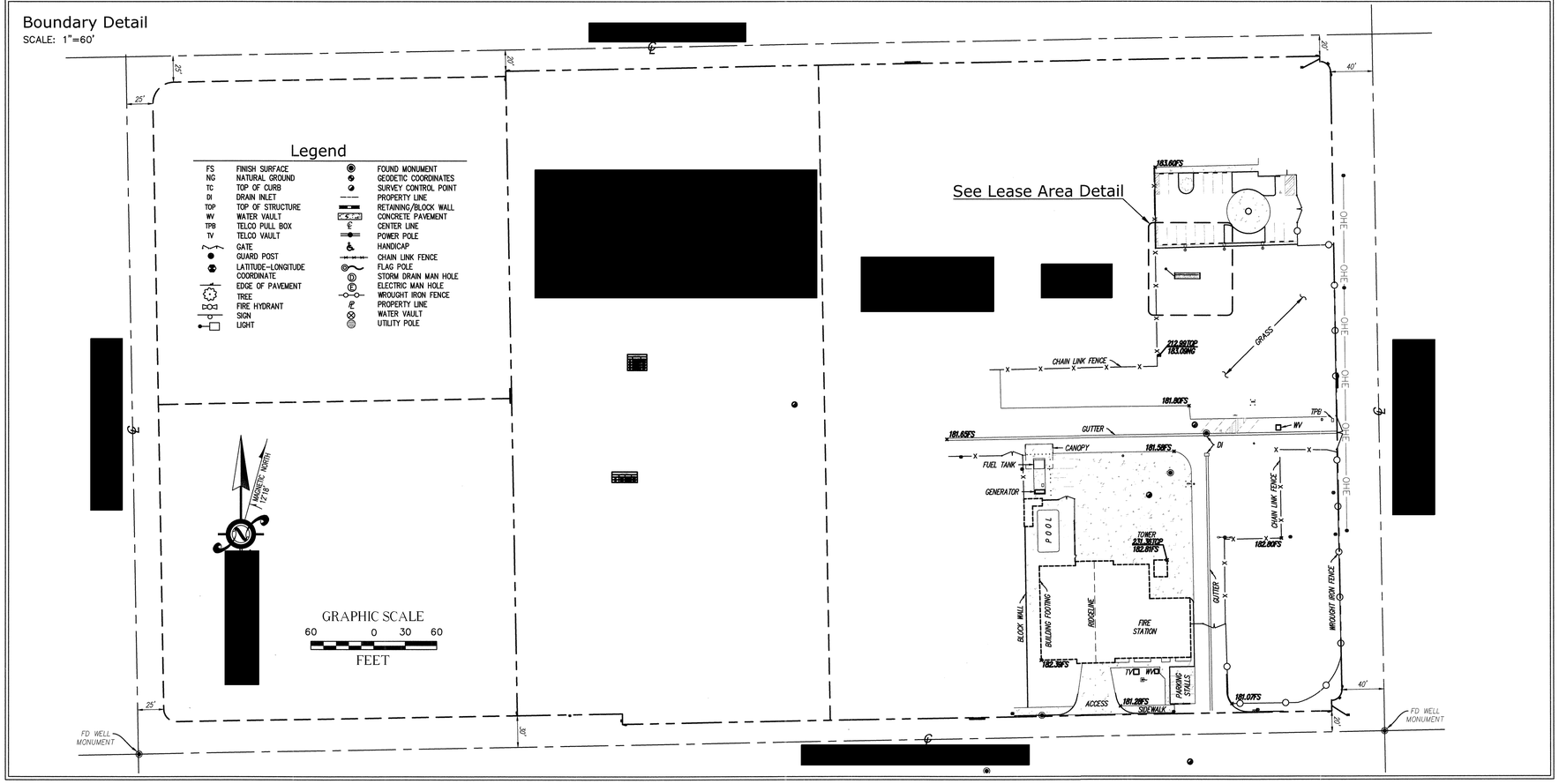

LA-RICS
Los Angeles Regional Interoperable Communications System

[redacted]

TOPOGRAPHIC SURVEY
C1

[redacted]

GENERAL NOTES:

1. CONSTRUCTION STAGING AREA TO BE DETERMINED AT PRE CONSTRUCTION WALK WITH LANDLORD & AUTHORITY
2. VERIFY POWER/UTILITY DESIGN PRIOR TO CONSTRUCTION.
3. EXISTING DRAINAGE AND PATTERN TO REMAIN THE SAME.
4. SEPARATE ELECTRICAL PERMIT IS REQUIRED.
5. A SEPARATE CERTIFICATE OF OCCUPANCY IS REQUIRED TO BE OBTAINED PRIOR TO FINALIZING THE BUILDING PERMIT.
6. A SEPARATE FIRE HAZARDOUS MATERIALS PERMIT IS REQUIRED TO BE OBTAINED.
7. SURROUNDING AREAS OF WORK SITE SHALL BE PROTECTED IN PLACE. THE CONTRACTOR SHALL REPLACE ANY DAMAGED FACILITIES TO ITS ORIGINAL CONDITION,

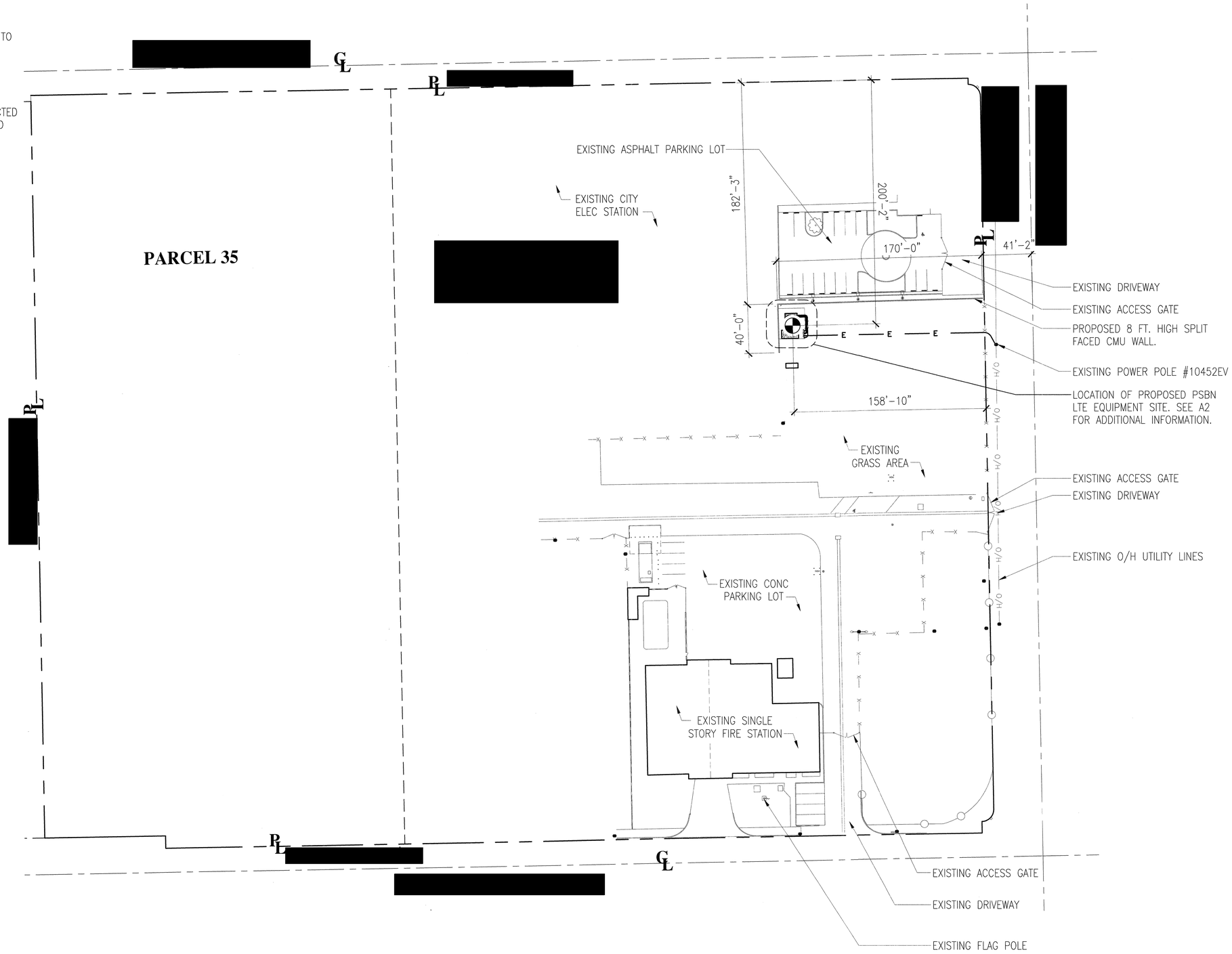

12°18'
MAGNETIC NORTH

01 **SITE PLAN & NOTES**
SCALE: 1"=40"

40 0 20 40
SCALE: 1"= 40'

LA-RICS
Los Angeles Regional Interoperable Communications System

[redacted]

SITE PLAN
A1

[redacted]

NOTE: ALL INFORMATION IS SUBJECT TO FIELD VERIFICATION. ALL INFORMATION IS CONFIDENTIAL AND NOT FOR PUBLIC DISTRIBUTION WITHOUT EXPRESS CONSENT OF THE LOS ANGELES REGIONAL INTEROPERABLE COMMUNICATIONS SYSTEMS AUTHORITY.

LA-RICS
Los Angeles Regional Interoperable Communications System

GENERAL NOTES:
1. CONSTRUCTION STAGING AREA TO BE DETERMINED AT PRE CONSTRUCTION WALK WITH LANDLORD & AUTHORITY

2. VERIFY POWER/UTILITY DESIGN PRIOR TO CONSTRUCTION.

3. EXISTING DRAINAGE AND PATTERN TO REMAIN THE SAME.

4. SEPARATE ELECTRICAL PERMIT IS REQUIRED.

5. A SEPARATE CERTIFICATE OF OCCUPANCY IS REQUIRED TO BE OBTAINED PRIOR TO FINALIZING THE BUILDING PERMIT.

6. A SEPARATE FIRE HAZARDOUS MATERIALS PERMIT IS REQUIRED TO BE OBTAINED.

7. SURROUNDING AREAS OF WORK SITE SHALL BE PROTECTED IN PLACE. THE CONTRACTOR SHALL REPLACE ANY DAMAGED FACILITIES TO ITS ORIGINAL CONDITION,

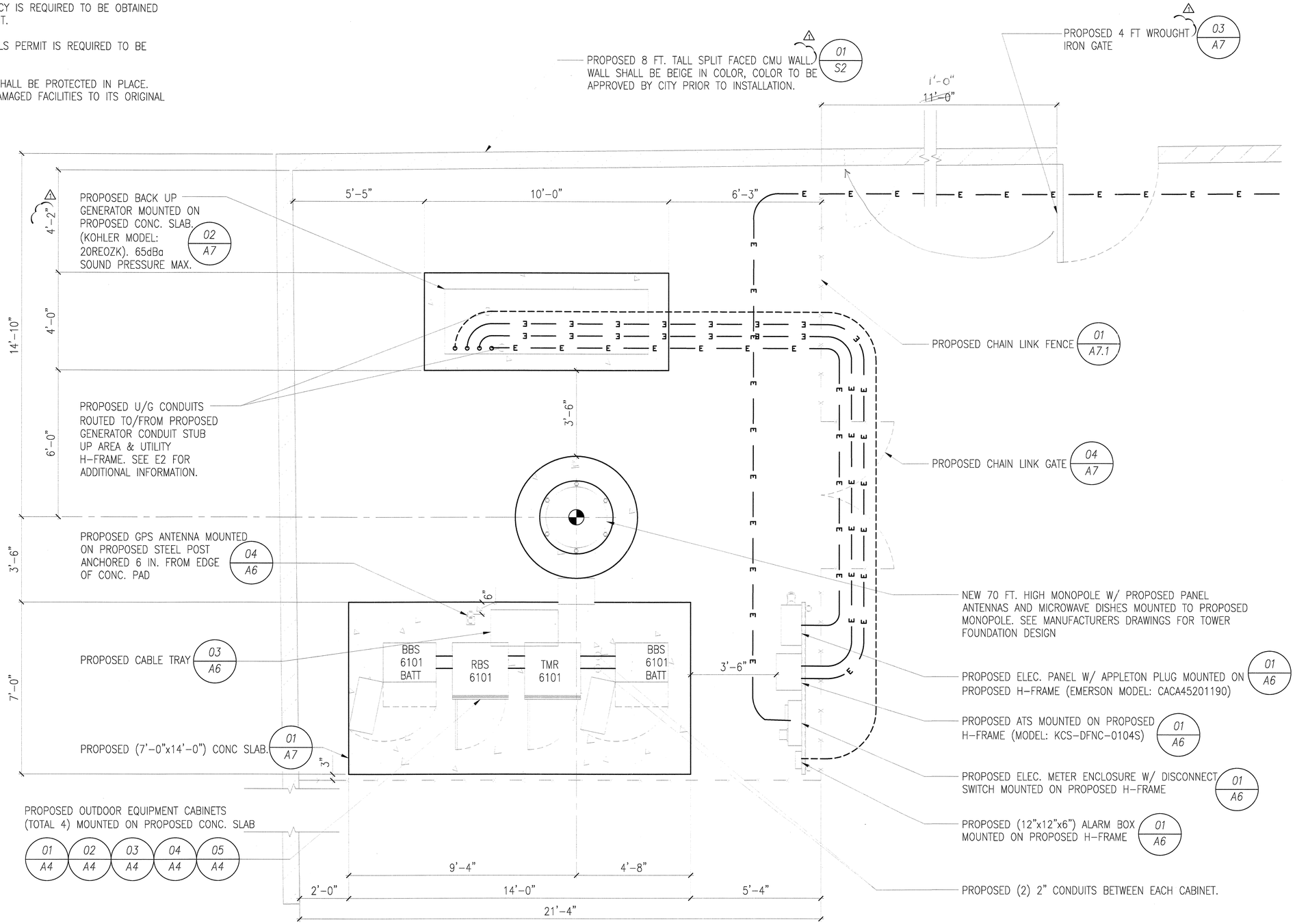

01 **ENLARGED SITE PLAN**
SCALE: 1/2"=1'-0"

2' 0 2'
SCALE: 1/2"= 1'-0"

ENLARGED SITE PLAN
A2

NOTE: ALL INFORMATION IS SUBJECT TO FIELD VERIFICATION. ALL INFORMATION IS CONFIDENTIAL AND NOT FOR PUBLIC DISTRIBUTION WITHOUT EXPRESS CONSENT OF THE LOS ANGELES REGIONAL INTEROPERABLE COMMUNICATIONS SYSTEMS AUTHORITY.

NOTE: ALL INFORMATION IS SUBJECT TO FIELD VERIFICATION. ALL INFORMATION IS CONFIDENTIAL AND NOT FOR PUBLIC DISTRIBUTION WITHOUT EXPRESS CONSENT OF THE LOS ANGELES REGIONAL INTEROPERABLE COMMUNICATIONS SYSTEMS AUTHORITY.

ANTENNA MOUNT SCHEDULE		
RAD CENTER	ANTENNA	SECTOR
69'	LNX-6515DS-A1M	
69'	LNX-6515DS-A1M	
69'	LNX-6515DS-A1M	
69'	LNX-6515DS-A1M	
69'	LNX-6515DS-A1M	
69'	LNX-6515DS-A1M	

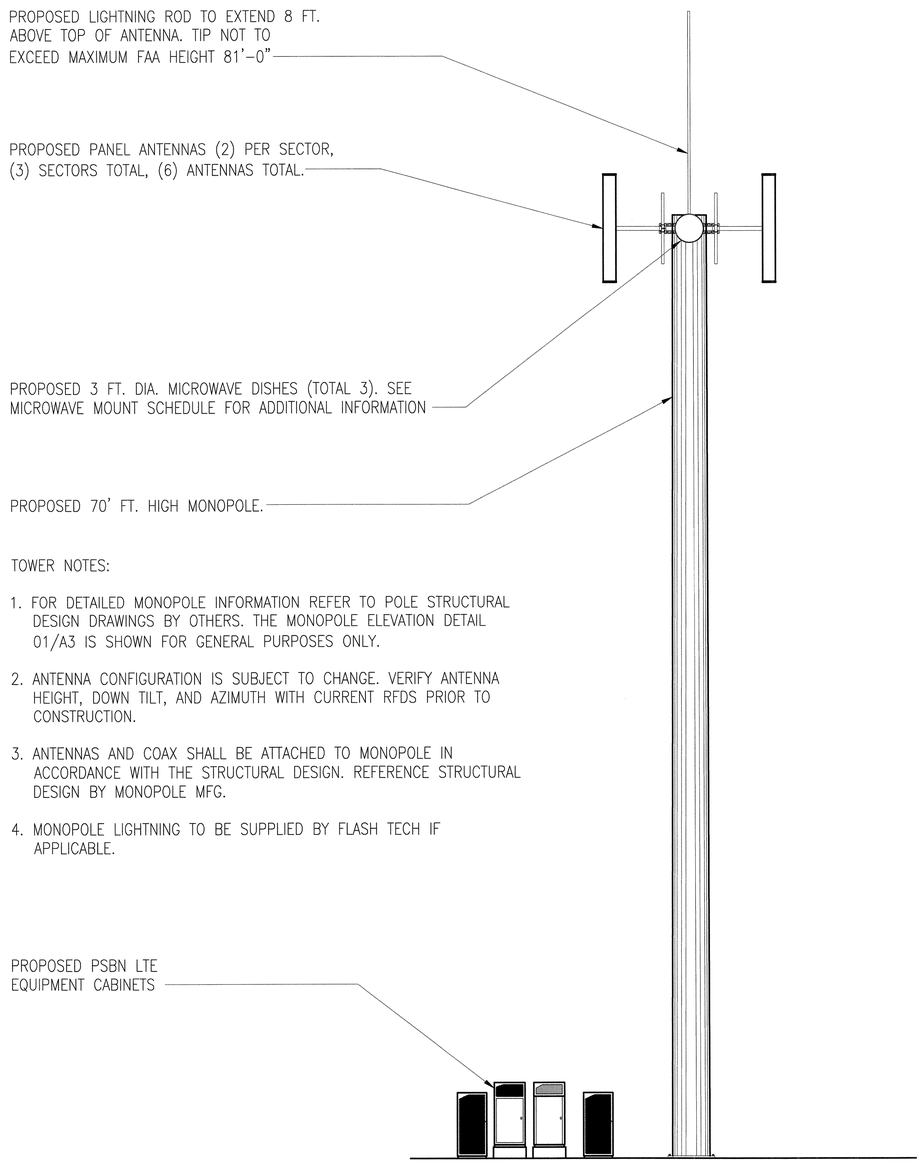

TOWER NOTES:

1. FOR DETAILED MONOPOLE INFORMATION REFER TO POLE STRUCTURAL DESIGN DRAWINGS BY OTHERS. THE MONOPOLE ELEVATION DETAIL 01/A3 IS SHOWN FOR GENERAL PURPOSES ONLY.
2. ANTENNA CONFIGURATION IS SUBJECT TO CHANGE. VERIFY ANTENNA HEIGHT, DOWN TILT, AND AZIMUTH WITH CURRENT RFDS PRIOR TO CONSTRUCTION.
3. ANTENNAS AND COAX SHALL BE ATTACHED TO MONOPOLE IN ACCORDANCE WITH THE STRUCTURAL DESIGN. REFERENCE STRUCTURAL DESIGN BY MONOPOLE MFG.
4. MONOPOLE LIGHTNING TO BE SUPPLIED BY FLASH TECH IF APPLICABLE.

01 **TOWER ELEVATION**
SCALE: NTS

MICROWAVE MOUNT SCHEDULE	
RAD CENTER	MICROWAVE DISH
69'	
69'	
69'	

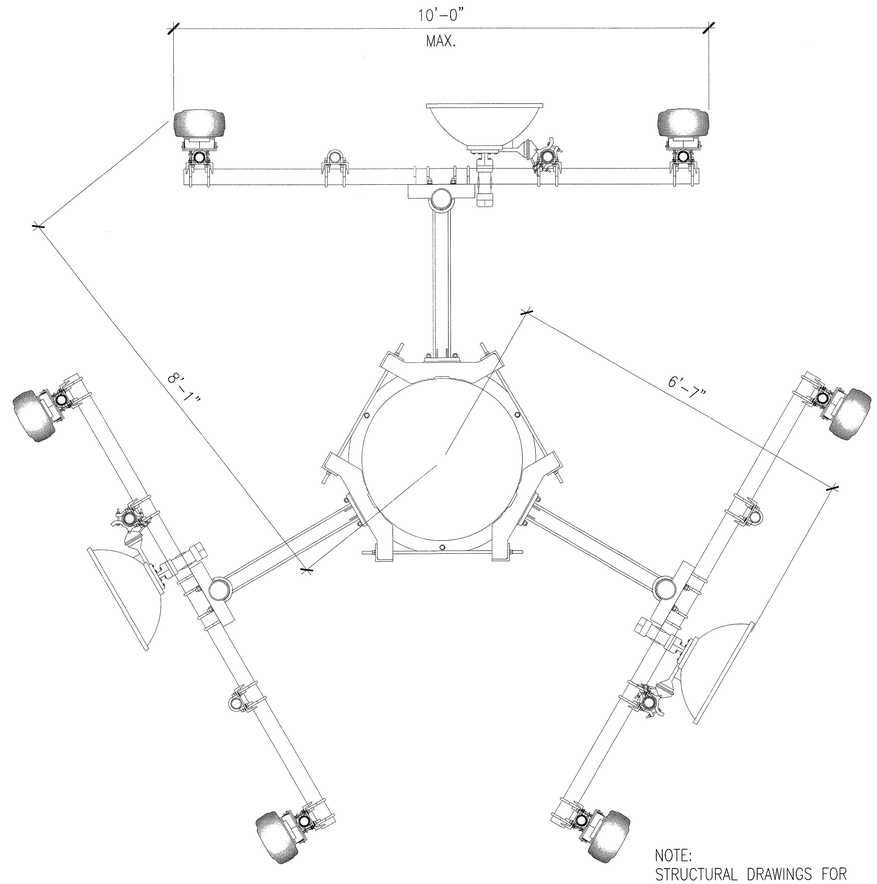

NOTE:
STRUCTURAL DRAWINGS FOR TRI-COLLAR BRACKET ASSEMBLY-SEE DRAWING # 113367-MM

NOTES:

1. JUMPER TO BE MOUNTED 1 FT. AWAY FROM MAINLINE & ANTENNA CONNECTORS (EACH WAY) THEN EVERY 2 FT. UP TO ANTENNA.
2. NO PIPE TO PIPE ANTENNA MOUNT PERMITTED.
3. ACTUAL T-ARM MOUNT, ANTENNA, & MICROWAVE MOUNTING LOCATIONS AND AZIMUTHS TO BE INSTALLED PER FINAL RFDS SHEET. NEED TO VERIFY RFDS PRIOR TO INSTALLATION.

03 **TYPICAL ANTENNA / MICROWAVE LAYOUT PLAN VIEW**
SCALE: NTS

LA-RICS
Los Angeles Regional Interoperable Communications System

TOWER ELEVATION
A3

NOTE: ALL INFORMATION IS SUBJECT TO FIELD VERIFICATION. ALL INFORMATION IS CONFIDENTIAL AND NOT FOR PUBLIC DISTRIBUTION WITHOUT EXPRESS CONSENT OF THE LOS ANGELES REGIONAL INTEROPERABLE COMMUNICATIONS SYSTEMS AUTHORITY.

LA-RICS
Los Angeles Regional Interoperable Communications System

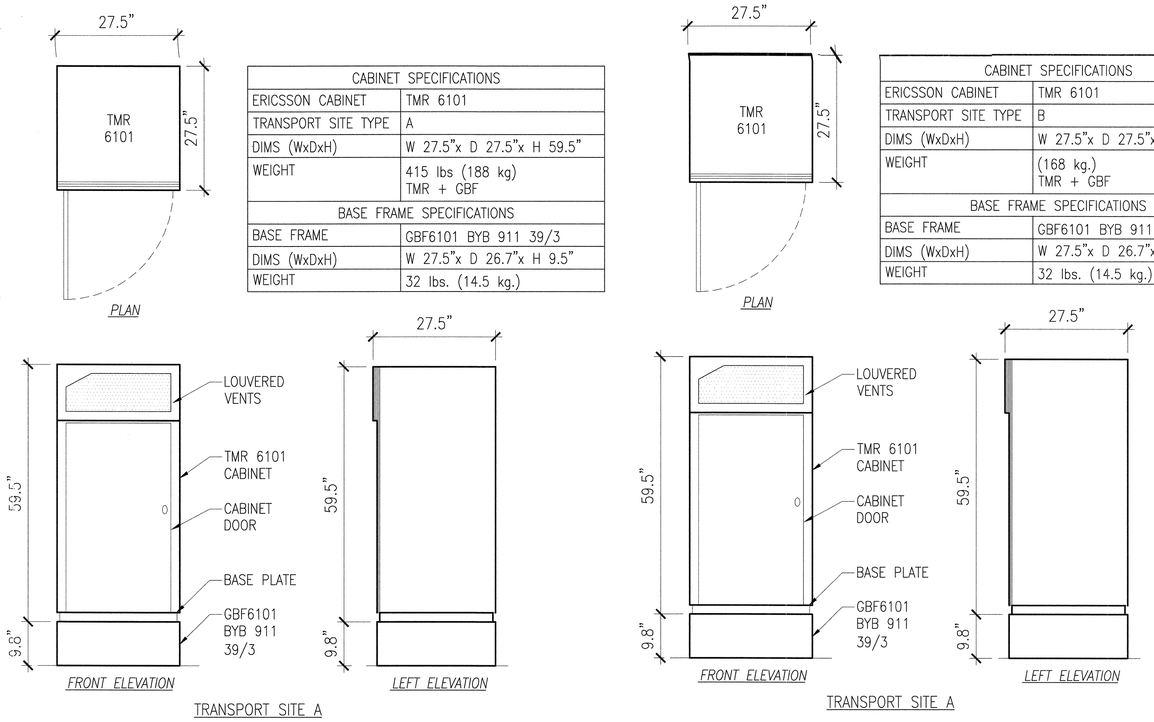

CABINET SPECIFICATIONS	
ERICSSON CABINET	TMR 6101
TRANSPORT SITE TYPE	A
DIMS (WxDxH)	W 27.5"x D 27.5"x H 59.5"
WEIGHT	415 lbs (188 kg) TMR + GBF
BASE FRAME SPECIFICATIONS	
BASE FRAME	GBF6101 BYB 911 39/3
DIMS (WxDxH)	W 27.5"x D 26.7"x H 9.5"
WEIGHT	32 lbs. (14.5 kg.)

CABINET SPECIFICATIONS	
ERICSSON CABINET	TMR 6101
TRANSPORT SITE TYPE	B
DIMS (WxDxH)	W 27.5"x D 27.5"x H 59.5"
WEIGHT	(168 kg.) TMR + GBF
BASE FRAME SPECIFICATIONS	
BASE FRAME	GBF6101 BYB 911 39/3
DIMS (WxDxH)	W 27.5"x D 26.7"x H 9.5"
WEIGHT	32 lbs. (14.5 kg.)

ALL INSTALLED CABINET TO BE KEYED THE SAME

01 TMR OUTDOOR EQUIPMENT CABINET
SCALE: NTS

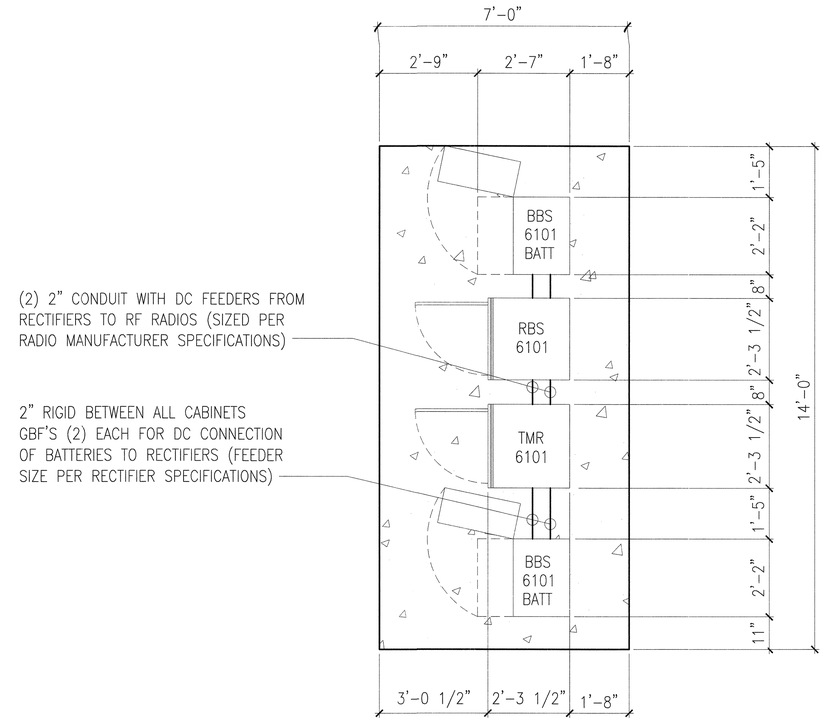

05 TYP. CABINET LAYOUT CONFIGURATION W/ CABINET SEPARATION
SCALE: 1/2"=1'-0"

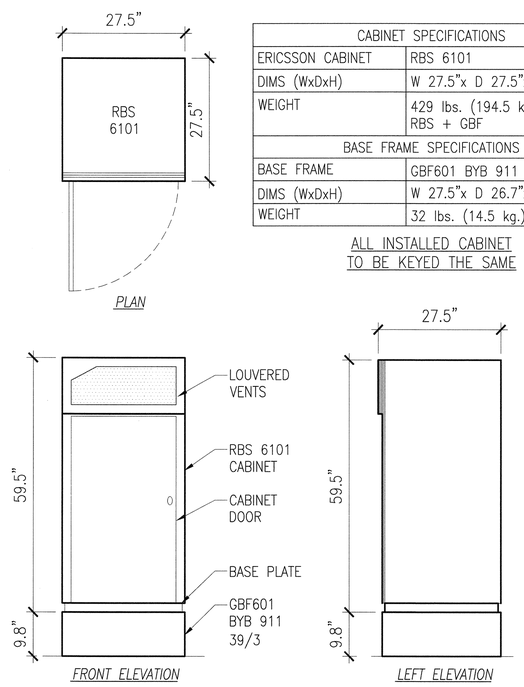

CABINET SPECIFICATIONS	
ERICSSON CABINET	RBS 6101
DIMS (WxDxH)	W 27.5"x D 27.5"x H 59.5"
WEIGHT	429 lbs. (194.5 kg.) RBS + GBF
BASE FRAME SPECIFICATIONS	
BASE FRAME	GBF601 BYB 911 39/3
DIMS (WxDxH)	W 27.5"x D 26.7"x H 9.5"
WEIGHT	32 lbs. (14.5 kg.)

ALL INSTALLED CABINET TO BE KEYED THE SAME

02 RBS OUTDOOR EQUIPMENT CABINET
SCALE: NTS

WEIGHT	
UNIT	WEIGHT W/O BATTERIES AND CABLES BMK 901 115 R1B & R2A
CABINET W/O DOOR	85 kg.
EQ ZONE 4 CABINET W/O DOOR	148 kg.
CABINET WITH DOOR	128 kg.
EQ ZONE 4 CABINET WITH DOOR	191 kg.

SPECIFICATIONS	
CABINET	ERICSSON BBS 6101
DIMS (WxDxH)	W 26.3"x D 31.4"x H 57.6"

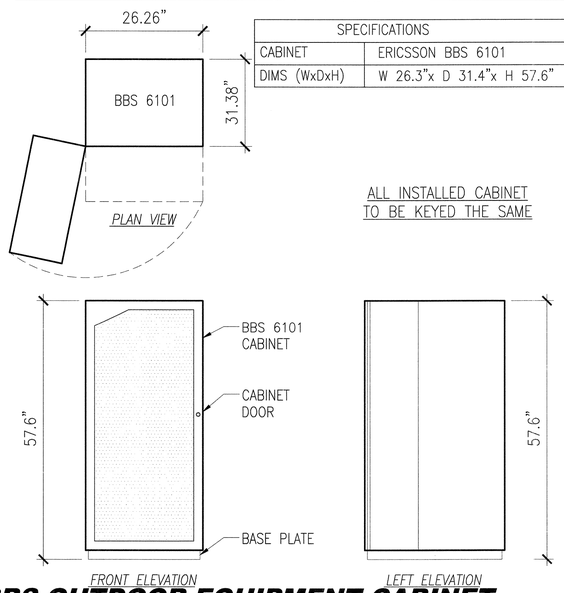

ALL INSTALLED CABINET TO BE KEYED THE SAME

03 BBS OUTDOOR EQUIPMENT CABINET
SCALE: NTS

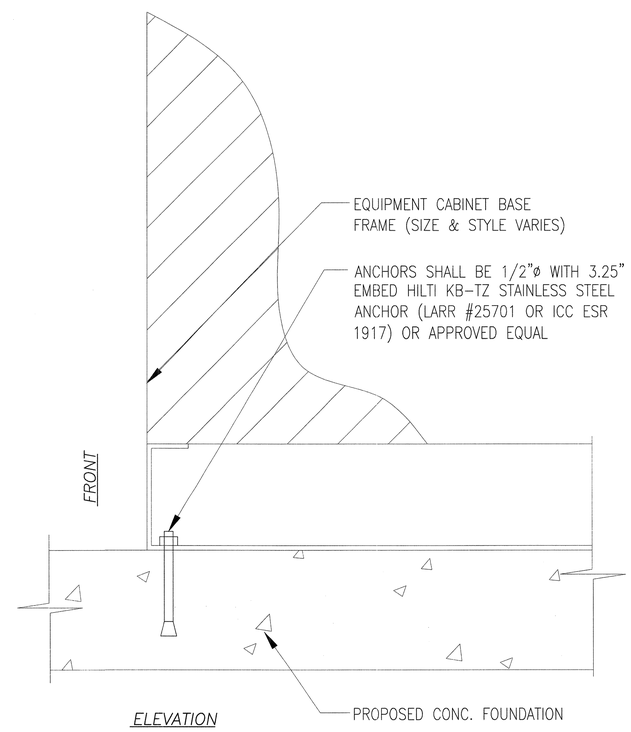

04 EQUIP, CABINET ATTACHMENT DETAIL
SCALE: NTS

EQUIPMENT DETAILS
A4

NOTE: ALL INFORMATION IS SUBJECT TO FIELD VERIFICATION. ALL INFORMATION IS CONFIDENTIAL AND NOT FOR PUBLIC DISTRIBUTION WITHOUT EXPRESS CONSENT OF THE LOS ANGELES REGIONAL INTEROPERABLE COMMUNICATIONS SYSTEMS AUTHORITY.

LA-RICS
Los Angeles Regional Interoperable Communications System

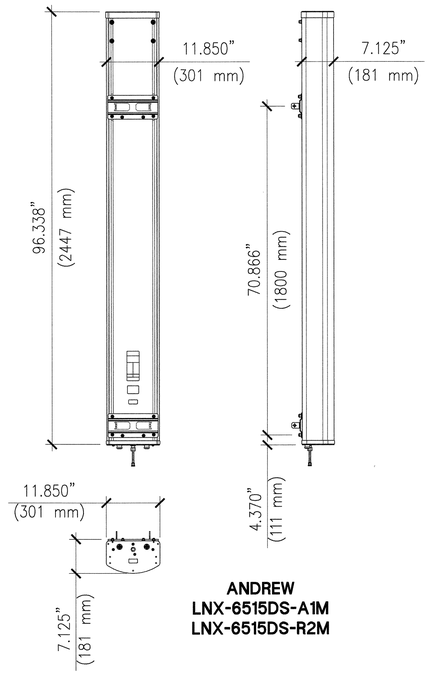

ANDREW
LNX-6515DS-A1M
LNX-6515DS-R2M

01 ANTENNA ATTACHMENT DETAILS
SCALE: NTS

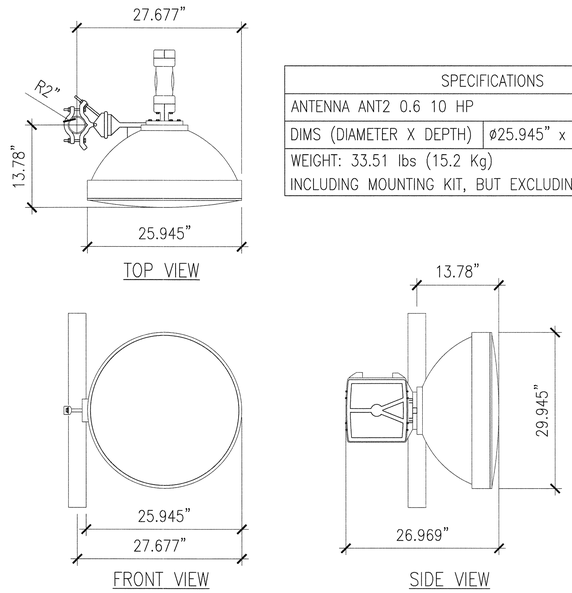

SPECIFICATIONS	
ANTENNA ANT2 0.6 10 HP	
DIMS (DIAMETER X DEPTH)	ø25.945" x 13.780"
WEIGHT: 33.51 lbs (15.2 Kg) INCLUDING MOUNTING KIT, BUT EXCLUDING PIPE MOUNT	

02 MICROWAVE DISH ATTACHMENT
SCALE: NTS

03 NOT USED
SCALE: NTS

04 NOT USED
SCALE: NTS

05 NOT USED
SCALE: NTS

EQUIPMENT DETAILS
A4.1

NOTE: ALL INFORMATION IS SUBJECT TO FIELD VERIFICATION. ALL INFORMATION IS CONFIDENTIAL AND NOT FOR PUBLIC DISTRIBUTION WITHOUT EXPRESS CONSENT OF THE LOS ANGELES REGIONAL INTEROPERABLE COMMUNICATIONS SYSTEMS AUTHORITY.

LA-RICS
Los Angeles Regional Interoperable Communications System

COAX COLOR CODE SCHEDULE 2x4 MIMO

ANTENNA	SECTOR	RAU/ PORT	REFERENCE DESIGNATOR	PORT	SECTOR BAND 1 (NEAREST CONNECTION)	BAND 2
ANTENNA 1	A	1 TXRX	A1 Tx/Rx	1 (+45°)	RED	BLUE
ANTENNA 1	A	1 Rxdiv	A1 Rx	2 (−45°)	RED	ORANGE
ANTENNA 2	A	2 Rxdiv	A2 Rx	1 (+45°)	RED	GREEN
ANTENNA 2	A	2 TXRX	A2 Tx/Rx	2 (−45°)	RED	BROWN
ANTENNA 3	B	3 TXRX	B1 Tx/Rx	1 (+45°)	BLUE	BLUE
ANTENNA 3	B	3 RXdiv	B1 Rx	2 (−45°)	BLUE	ORANGE
ANTENNA 4	B	4 RXdiv	B2 Rx	1 (+45°)	BLUE	GREEN
ANTENNA 4	B	4 TXRX	B2 Tx/Rx	2 (−45°)	BLUE	BROWN
ANTENNA 5	C	5 TXRX	C1 Tx/Rx	1 (+45°)	GREEN	BLUE
ANTENNA 5	C	5 RXdiv	C1 Rx	2 (−45°)	GREEN	ORANGE
ANTENNA 6	C	6 RXdiv	C2 Rx	1 (+45°)	GREEN	GREEN
ANTENNA 6	C	6 TXRX	C2 Tx/Rx	2 (−45°)	GREEN	BROWN
GPS1			GPS1		WHITE	
GPS2			GPS2		WHITE	WHITE

COAX COLOR CODE SCHEDULE 2x2 MIMO

ANTENNA	SECTOR	RAU/ PORT	REFERENCE DESIGNATOR	PORT	SECTOR BAND 1 (NEAREST CONNECTION)	BAND 2
ANTENNA 1	A	1 TXRX	A1 Tx/Rx	1 (+45°)	RED	BLUE
ANTENNA 1	A	1 TXRX	A2 Tx/Rx	2 (−45°)	RED	ORANGE
ANTENNA 2	–	–	–	–	RED	GREEN
ANTENNA 2	–	–	–	–	RED	BROWN
ANTENNA 3	B	3 TXRX	B1 Tx/Rx	1 (+45°)	BLUE	BLUE
ANTENNA 3	B	3 TXRX	B2 Tx/Rx	2 (−45°)	BLUE	ORANGE
ANTENNA 4	–	–	–	–	BLUE	GREEN
ANTENNA 4	–	–	–	–	BLUE	BROWN
ANTENNA 5	C	5 TXRX	C1 Tx	1 (+45°)	GREEN	BLUE
ANTENNA 5	C	5 TXRX	C2 Tx/Rx	2 (−45°)	GREEN	ORANGE
ANTENNA 6	–	–	–	–	GREEN	GREEN
ANTENNA 6	–	–	–	–	GREEN	BROWN
GPS1			GPS1		WHITE	
GPS2			GPS2		WHITE	WHITE

NOTES:

1. ALL TRANSMISSION LINES SHALL BE MARKED WITH APPROPRIATE COLOR TAPE BANDS (1" WIDE COLOR TAPE) FOR IDENTIFICATION NEAR ANTENNA, JUST BEFORE ENTERING THE LTE EQUIPMENT AS WELL AS INSIDE THE SHELTER/BUILDING, WITHIN 24" OF THE ENTRY PORT. FOR COLOR CODING SCHEME, REFERENCE TABLE THIS DETAIL. TAPE SHALL BE FADE-RESISTANT, UV-RESISTANT AND CHEMICAL RESISTANT, REFERENCE HH-I-595C.
2. WHERE VISIBILITY END TO END IS NOT POSSIBLE, ADDITIONAL BANDING SHALL BE REQUIRED.
3. ALL JUMPERS SHALL BE MARKED WITH APPROPRIATE COLOR TAPE BANDS ON BOTH ENDS.
4. 1" INCH WIDE COLOR TAPE WITH 3/4" SPACING BETWEEN BANDS.

01 ANTENNA, AND COAX CABLE/COAX SCHEDULE

SCALE: NTS

CABLE	COMMSCOPE MODEL NUMBER	MINIMUM BENDING RADIUS	SIZE
LDF4	LDF4-50A	5"	1/2"
AVA5	AVA5-50FX	10"	7/8"
CNT 400	CNT 400	1"	
CNT 600	CNT 600	1.5"	

02 COAX & JUMPER MINIMUM BENDING RADIUS TABLE

SCALE: NTS

PORT ASSIGNMENTS
A5

[redacted]

NOTE: ALL INFORMATION IS SUBJECT TO FIELD VERIFICATION. ALL INFORMATION IS CONFIDENTIAL AND NOT FOR PUBLIC DISTRIBUTION WITHOUT EXPRESS CONSENT OF THE LOS ANGELES REGIONAL INTEROPERABLE COMMUNICATIONS SYSTEMS AUTHORITY.

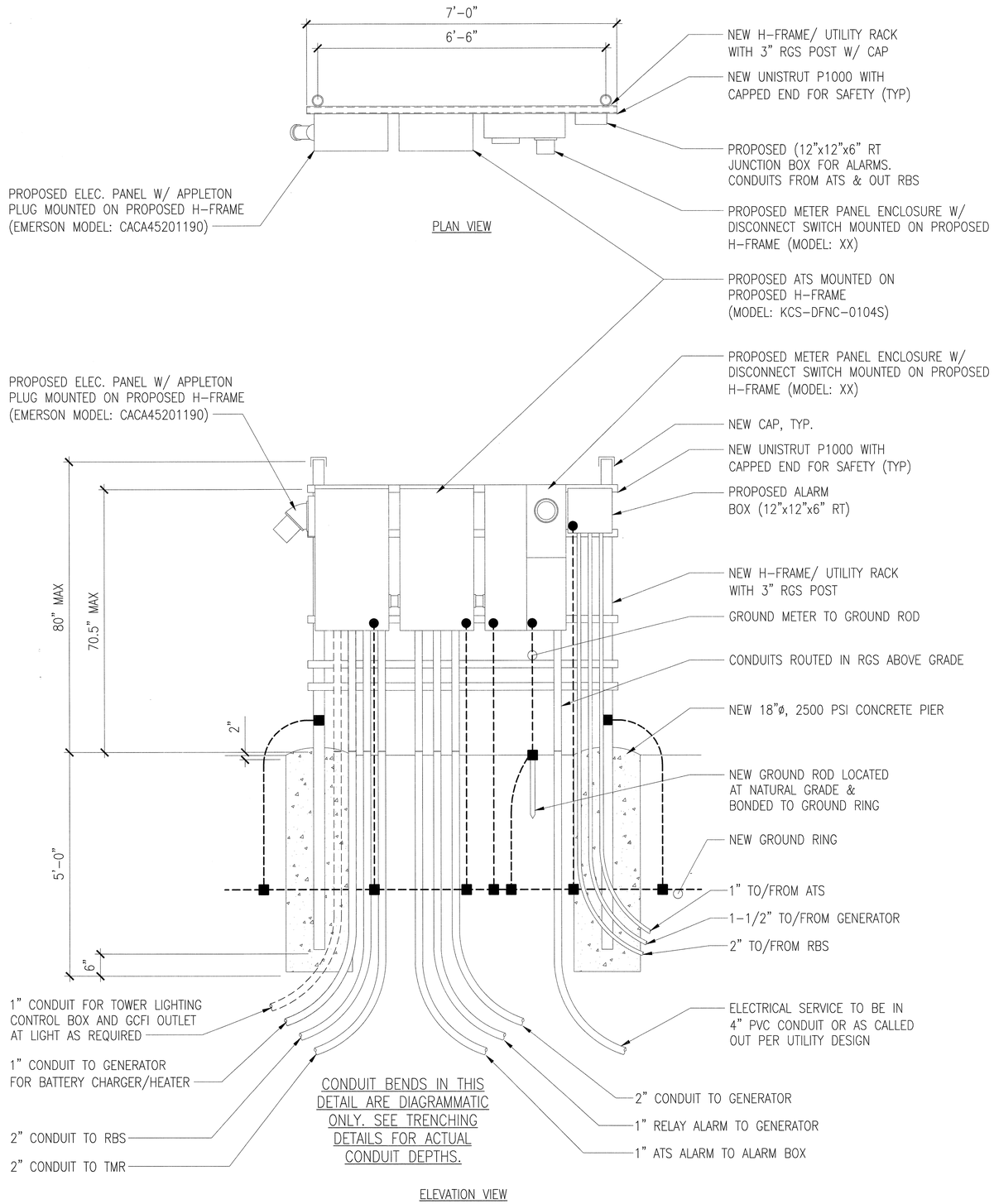

NOTES:

1. 2500 PSI OR 5000 PSI COMMERCIAL "QUIK-CRETE" MAY BE USED FOR PIERS
2. NO ZINC HARDWARE TO BE USED

01 H-FRAME DETAIL

SCALE: NTS

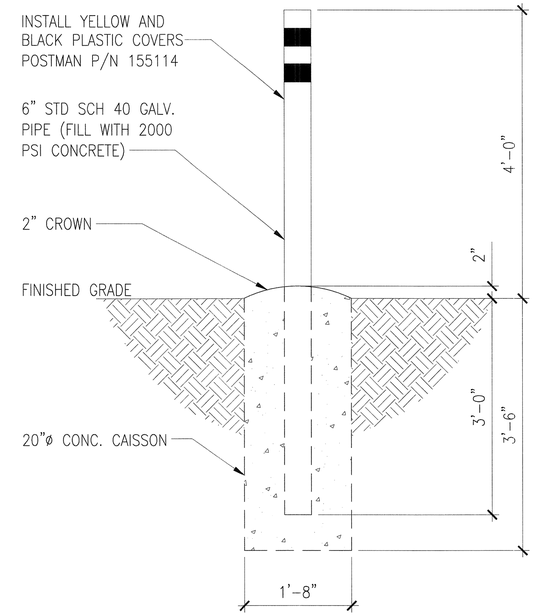

02 BOLLARD DETAIL

SCALE: NTS

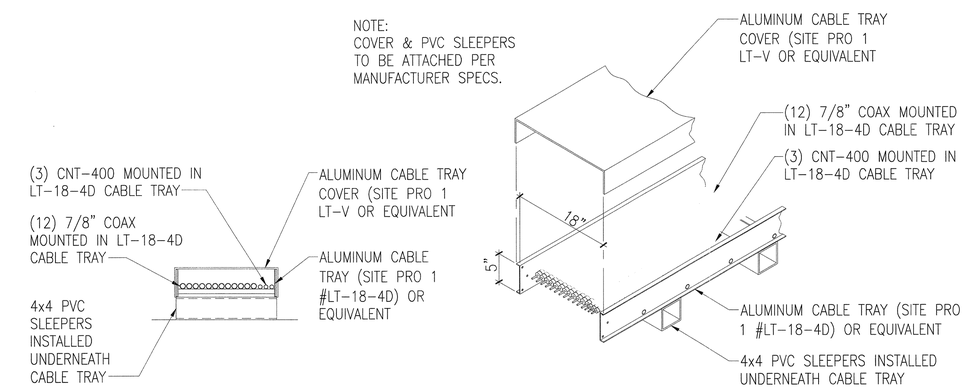

03 COAX CABLE TRAY

SCALE: NTS

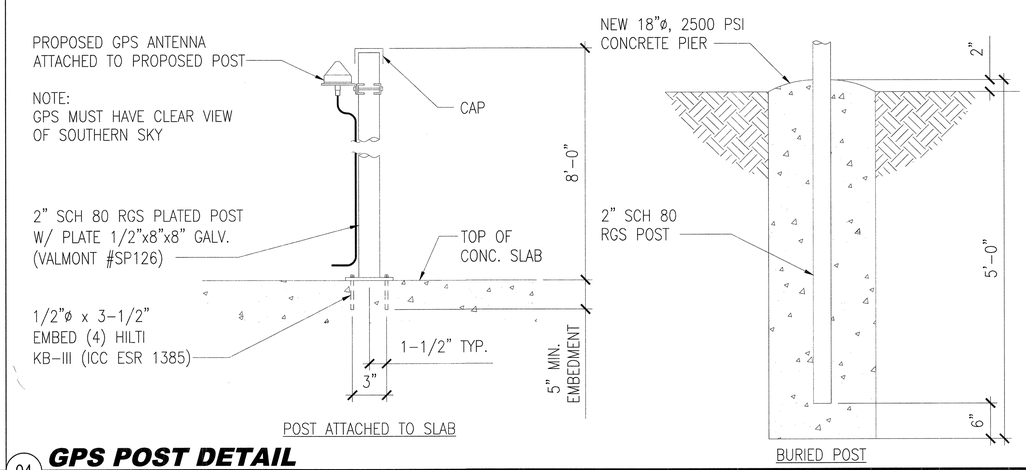

04 GPS POST DETAIL

SCALE: NTS

LA-RICS
Los Angeles Regional Interoperable Communications System

UTILITY DETAILS
A6

NOTE: ALL INFORMATION IS SUBJECT TO FIELD VERIFICATION. ALL INFORMATION IS CONFIDENTIAL AND NOT FOR PUBLIC DISTRIBUTION WITHOUT EXPRESS CONSENT OF THE LOS ANGELES REGIONAL INTEROPERABLE COMMUNICATIONS SYSTEMS AUTHORITY.

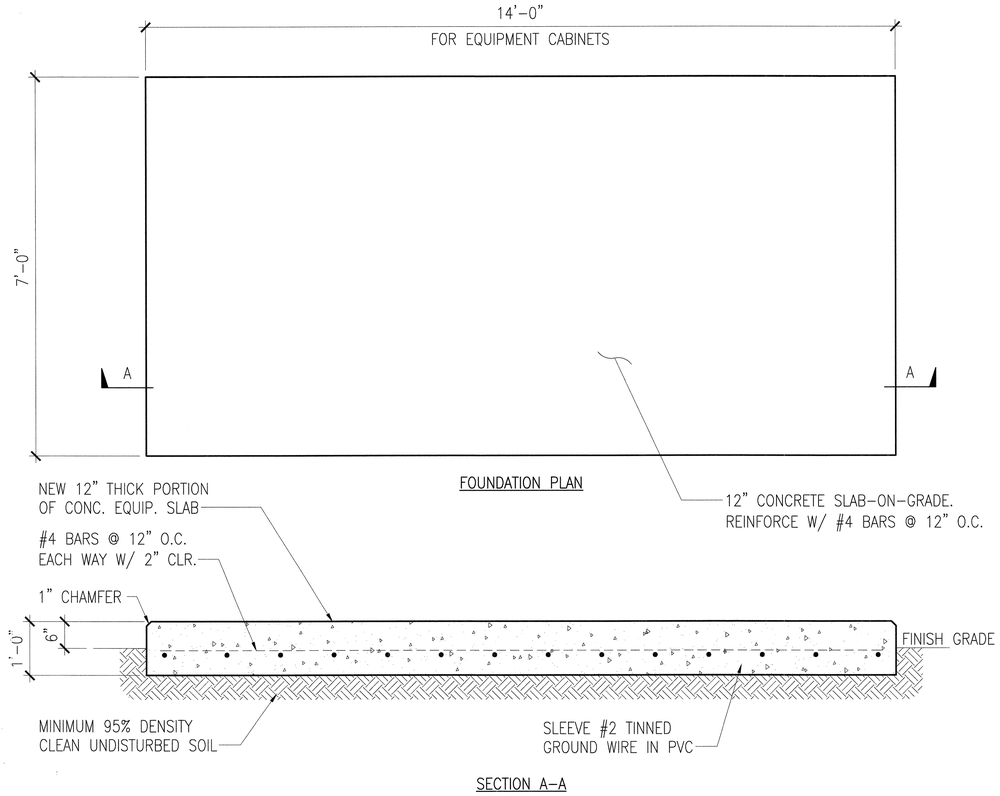

01 **EQUIPMENT FOUNDATION**
SCALE: 3/4"=1'-0"

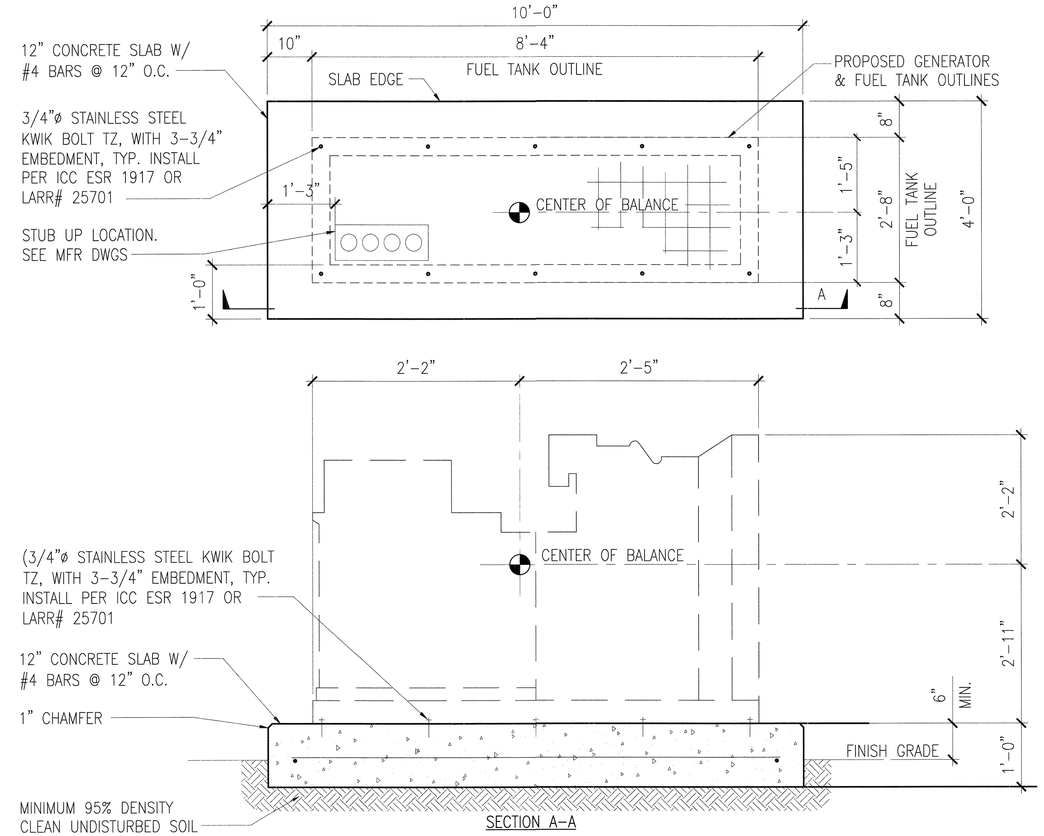

02 **GENERATOR FOUNDATION SECTION**
SCALE: NTS

LA-RICS
Los Angeles Regional Interoperable Communications System

FOUNDATION & CMU WALL
DETAILS
A7

NOTE: ALL INFORMATION IS SUBJECT TO FIELD VERIFICATION. ALL INFORMATION IS CONFIDENTIAL AND NOT FOR PUBLIC DISTRIBUTION WITHOUT EXPRESS CONSENT OF THE LOS ANGELES REGIONAL INTEROPERABLE COMMUNICATIONS SYSTEMS AUTHORITY.

LA-RICS
Los Angeles Regional Interoperable Communications System

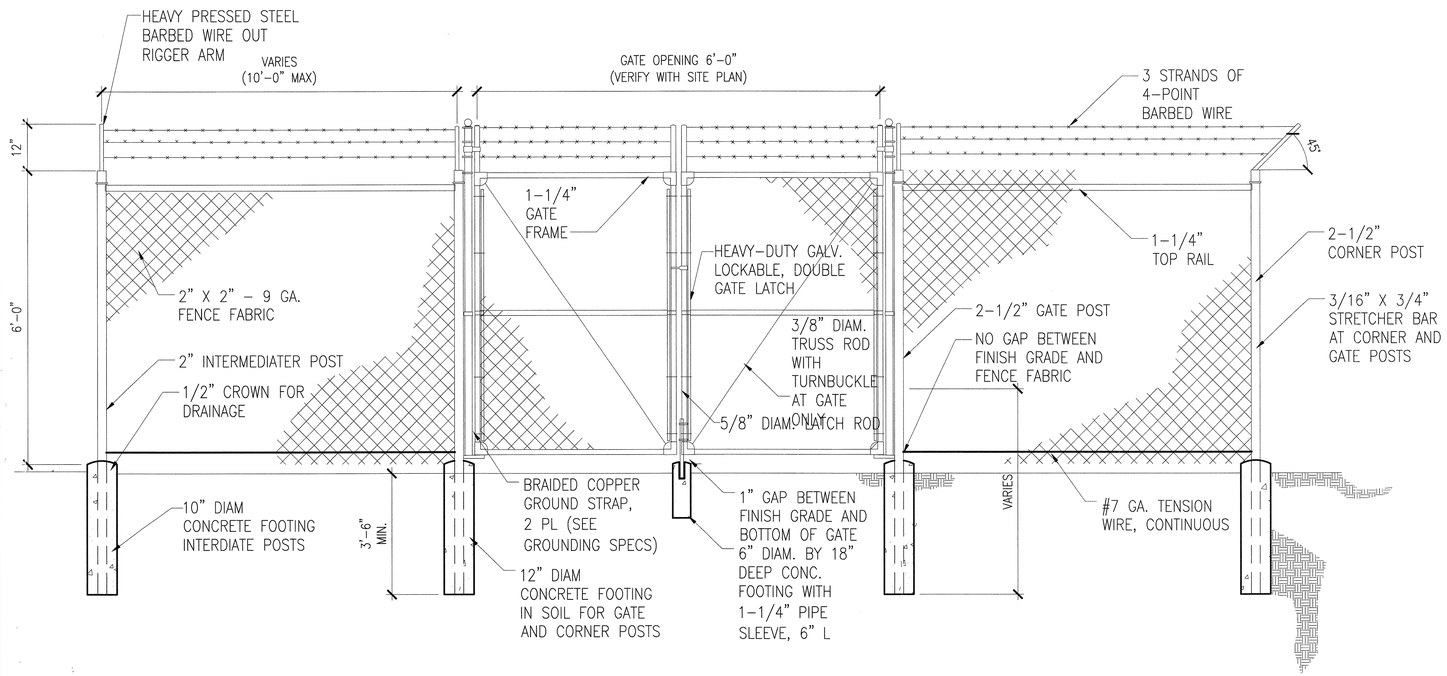

01 CHAIN LINK FENCE & GATE DETAIL

SCALE: 1/2"=1'-0"

02 NOT USED

SCALE: NTS

DETAILS
A7.1

SIGNS:

1. NO TRESPASSING SIGN:

   A. THIS SIGN SHOULD BE MADE OF 8½"x11" 60-MIL THICK WHITE PLASTIC.

   B. FOR RAW LAND SITES THE SIGN SHOULD BE PLACED ON THE PERIMETER FENCE AT THE GATE LOCATION IF A FENCE IS AVAILABLE. IF THERE IS NO PERIMETER FENCE THE SIGN SHALL BE MOUNTED TO THE EXTERIOR SIDE OF THE ENTRANCE DOOR TO THE SHELTER/EQUIPMENT ROOM. IF A SHELTER IS NOT PLANNED FOR THE SITE, POSTING OF THE SIGN TO BE LOCATED ON THE RBS CABINET DOOR. CENTERED HORIZONTALLY AND 2" BELOW SITE NAME SIGN.

   C. THE SIGN SHALL READ: "NO TRESPASSING VIOLATORS WILL BE PROSECUTED"

2. SITE NAME SIGN:

   A. THIS SIGN SHOULD BE MADE OF 8½"x11" 60-MIL THICK WHITE PLASTIC.

   B. THIS SIGN SHOULD BE PLACED ON THE EXTERIOR SIDE OF THE ENTRANCE DOOR TO THE SHELTER/EQUIPMENT ROOM. IF SHELTER NOT PLANNED FOR THIS SITE, POSTING OF THE SIGN TO BE LOCATED ONT THE RBS CABINET DOOR. CENTER HORIZONTALLY AND 6" FROM THE TOP.

   C. THE SIGN SHALL READ:
   SITE NAME
   FOR EMERGENCY ACCESS, OR
   WHEN WORKING ON THIS SITE,
   CALL: (XXX) XXX-XXXX

   D. THIS SIGN AND THE NO TRESPASSING SIGN MAY BE COMBINED IF THERE IS NO PERIMETER FENCE. THIS SIGN SHOULD BE MADE OF 8½"X11" 60-MIL THICK WHITE PLASTIC.

3. INFORMATION SIGN:

   A. THIS SIGN SHOULD BE MADE OF 8½"x11" 60-MIL THICK WHITE PLASTIC.

   B. THIS SIGN SHOULD BE PLACED ON THE LEG OF TOWER OR BASE OF MONOPOLE AT EYE LEVEL

4. CAUTION ELECTRICAL SHOCK HAZARD SIGN:

   A. THIS SIGN SHOULD BE MADE OF 8½"x11" 60-MIL THICK WHITE PLASTIC. LETTERING AND COLORING SHALL BE PER OSHA 1910.145: REGULATION OF ACCIDENT PREVENTION SIGNS AND TAGS.

   B. THIS SIGN SHALL BE POSTED ON THE PPC CABINET DOOR CENTER HORIZONTALLY AND 4" FROM THE TOP.

   C. THE SIGN SHALL READ: "CAUTION ELECTRICAL SHOCK HAZARD"

5. RF RADIATION SAFETY SIGNS:

   A. RF RADIATION SAFETY SIGNS SHALL BE POSTED AT ALL SITES ON THE FRONT GATE OF ENTRANCE INTO THE SITE. ANY SITE WHERE THE Tx ANTENNA IS LOWER THAN 10 METERS MAY REQUIRE ADDITIONAL SIGNS AND MUST BE HIGHLIGHTED TO SYSTEMS ENGINEERING.

   B. RF RADIATION NOTICE SAFETY SIGN SYMBOLS AND COLORING MUST CONFORM TO THE ANSI STANDARD 2535.3 FOR RADIO FREQUENCY ENERGY AND CURRENT FLOW SYMBOLS.

6. DANGER NO SMOKING SIGN:

   A. THIS SIGN SHOULD BE MADE OF 8½"x11" 60-MIL THICK WHITE PLASTIC. LETTERING AND COLORING SHALL BE PER OSHA 1910.145: REGULATION OF ACCIDENT PREVENTION SIGNS AND TAGS.

   B. THIS SIGN SHALL BE POSTED INSIDE COMPOUND FACING TOWARD SITE

   C. THE SIGN SHALL READ: "DANGER NO SMOKING"

   D. IF PERIMETER FENCE IS NOT PLANNED, THE SIGN SHALL BE PLACED ON THE FUEL TANK OR ON THE CMU PROTECTIVE WALL.

7. BROADBAND TECHNOLOGY OPPORTUNITIES PROGRAMS (BTOP) SIGNAGE.

   A. RECIPIENTS MUST FOLLOW MINIMUM REQUIREMENTS WHEN DEVELOPING RECOVERY ACT DISPLAY SIGNAGE FOR BTOP CONSTRUCTION SITES.

   B. RECIPIENTS MUST USE THE PRIMARY EMBLEM OR BroadbandUSA EMBLEM IN CONSTRUCTION SIGNAGE.

   C. THE EMBLEM MUST BE AT LEAST 6 IN. OR LARGER IN DIAMETER.

   D. RECIPIENTS MUST NOT CHANGE PROPORTIONS OF THE EMBLEM

   E. IF USING COLOR EMBLEM, USE THE COLORS SPECIFIED BY NTIA

   F. ALWAYS LEAVE CLEAR SPACE SURROUNDING THE LOGO EQUAL TO HALF OF THE LOGO'S RADIUS

8. 704 DIESEL FUEL PLACARD:

   A. THIS SIGN SHOULD BE MADE OF 8½"x11" 60-MIL THICK WHITE PLASTIC.

   B. THIS SIGN SHOULD BE PLACED ON THE DOOR OF THE DIESEL FUEL GENERATOR, AND VISIBLE.

SIGN SPECIFICATIONS:

1. THE CONTRACTOR AND OWNER'S REPRESENTATIVE SHALL FIELD VERIFY THE EXISTENCE AND CONDITION OF SIGNS ON CO-LOCATE SITES. ANY SIGNS THAT ARE MISSING OR DETERMINED TO BE IN NEED OF REPLACEMENT SHALL BE FABRICATED AND PLACED IN ACCORDANCE WITH THE FOLLOWING SPECIFICATIONS UNLESS OSHA APPROVED STANDARD SIGNS CAN BE USED.

2. ALL SIGNS SHOULD BE UV-RESISTANT FOR OUTDOOR USE.

3. ALL SIGNS SHOULD HAVE A MINIMUM 5-YEAR GUARANTEE WITHOUT SHOWING ANY SIGNS OF DEGRADATION.

4. LL SIGNS SHALL HAVE ROUNDED CORNERS AND WEATHER PROOF PRESSURE SENSITIVE ADHESIVE BACKING FOR MOUNTING PURPOSES.

5. ALL SIGNS SHALL BE PROVIDED PER THE REQUIREMENTS CONTAINED IN THIS DRAWING PACKAGE.

6. ALL SIGN LETTERS SHALL BE PRINTED OR ENGRAVED, NO STICKERS.

7. COLOR UNLESS NOTED OTHERWISE: BLACK LETTERING ON WHITE BACKGROUND. EXCEPTION: "DANGER" AND "CAUTION" SIGNS TO HAVE RED LETTERING ON WHITE BACKGROUND.

8. CONTRACTOR MUST VERIFY ALL SITE SIGNAGE WITH CONSTRUCTION PROJECT MANAGER PRIOR TO ORDERING ANY SIGNS.

9. THE CONTRACTOR WITH FURNISH AND INSTALL THESE SIGNS IN APPROPRIATE LOCATIONS, INCLUDING BUT NOT LIMITED TO; ON THE EXTERIOR OF ALL SIDES OF THE SHELTER AND FENCE.

10. THE CONTRACTOR WILL INSTALL ALL SIGNS IN A MANNER TO RESIST DETACHMENT FROM WIND-LIFT AND HARSH WEATHER (e.g., INTENSE HEAT, RAIN AND ICY CONDITIONS).

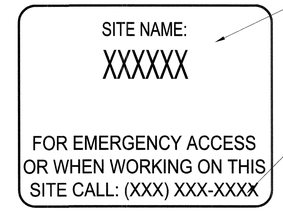

44 POINT HELVETICA
BLACK LETTERING
WHITE BACKGROUND

73 POINT HELVETICA
BLACK LETTERING
WHITE BACKGROUND

72 POINT HELVETICA
WHITE LETTERING
GREEN BACKGROUND

40 POINT HELVETICA
BLACK LETTERING
WHITE BACKGROUND

72 POINT HELVETICA
RED LETTERING
WHITE BACKGROUND

40 POINT HELVETICA
BLACK LETTERING
WHITE BACKGROUND

72 POINT HELVETICA
WHITE LETTERING
BLACK BACKGROUND

40 POINT HELVETICA
BLACK LETTERING
WHITE BACKGROUND

72 POINT HELVETICA (3/8")
RED LETTERING
WHITE BACKGROUND

72 POINT HELVETICA (3/8")
RED LETTERING
WHITE BACKGROUND

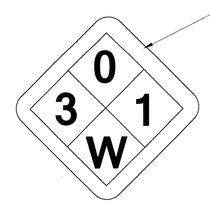

704 DIESEL FUEL PLACECARD.

BROADBAND TECHNOLOGY
OPPORTUNITIES PROGRAM
(BTOP) SIGNAGE.

01 **SITE SIGNAGE DETAILS**
SCALE: NTS

NOTE: ALL INFORMATION IS SUBJECT TO FIELD VERIFICATION. ALL INFORMATION IS CONFIDENTIAL AND NOT FOR PUBLIC DISTRIBUTION WITHOUT EXPRESS CONSENT OF THE LOS ANGELES REGIONAL INTEROPERABLE COMMUNICATIONS SYSTEMS AUTHORITY.

LA-RICS
Los Angeles Regional Interoperable Communications System

SITE SIGNAGE DETAILS
A8

LA-RICS
Los Angeles Regional Interoperable Communications System

GENERAL

1. THESE DRAWINGS HAVE BEEN PREPARED BY THE ENGINEER OF RECORD PRIMARILY TO SAFEGUARD AGAINST MAJOR STRUCTURAL DAMAGE AND LOSS OF LIFE, NOT TO LIMIT DAMAGE OR MAINTAIN USE OF THE STRUCTURE. SEE THE REQUIREMENTS OF THE CURRENT ACCEPTED BUILDING CODE, AND AS LISTED IN THE BASIS FOR DESIGN.

2. PROFESSIONAL STANDARDS OF CARE HAVE BEEN USED IN THE PREPARATION OF THESE DRAWINGS, NORMALLY EXERCISED UNDER SIMILAR CIRCUMSTANCES BY REPUTABLE ENGINEERS IN THIS, OR SIMILAR LOCALITIES.

3. WORKMANSHIP WILL BE OF A QUALITY THAT MEETS OR EXCEEDS PUBLIC SAFETY EXPECTATIONS AS DEFINED IN THIS EXHIBIT B (LMR & LTE SYSTEM SPECIFICATIONS). THE USE OF INFERIOR PRACTICES OR COMPONENTS WHETHER KNOWINGLY OR UNKNOWINGLY BY THE CONTRACTOR MAY RESULT IN THE REWORK OR REPLACEMENT, AT THE CONTRACTOR'S EXPENSE, THE WORK OR THE COMPONENTS DETERMINED TO BE INADEQUATE BY THE AUTHORITY. THE CONTRACTOR'S STAFF OR CONTRACTOR'S STAFF(S) THAT VIOLATE PROJECT WORKMANSHIP STANDARDS OR SAFETY RULES SHALL, AT THE AUTHORITY'S SOLE DISCRETION, BE REMOVED FROM THE PROJECT.

4. UPON COMPLETION OF THE WORK AT THE SITE, THE CONTRACTOR WILL REMOVE ALL OF ITS TOOLS, MATERIALS, AND OTHER ARTICLES FROM THE PROPERTY. SHOULD THE CONTRACTOR FAIL TO TAKE PROMPT ACTION TO THIS END, THE AUTHORITY, AT ITS OPTION AND WITHOUT WAIVER OF SUCH OTHER RIGHTS AS IT MAY HAVE, UPON THIRTY (30) CALENDAR DAYS' NOTICE, MAY TREAT SUCH ITEMS AS ABANDONED PROPERTY

5. DESIGN OF NON-STRUCTURAL ELEMENTS (I.E. STAIRS, RAILINGS, NON-LOAD BEARING WALLS, VENEERS, CURTAIN WALLS, ETC.) AND THEIR ATTACHMENT IS NOT INCLUDED, AND MUST BE PROVIDED BY OTHERS, UNLESS SPECIFICALLY NOTED ON THESE DRAWINGS.

6. DESIGN OF PRE-ENGINEERED STRUCTURAL PRODUCTS (I.E. WOOD TRUSSES, STEEL JOISTS, OR PRE-CAST CONCRETE ELEMENTS, ETC.) IS NOT INCLUDED AND MUST BE PROVIDED BY OTHERS, UNLESS SPECIFICALLY NOTED ON THESE DRAWINGS.

7. SPECIFICATION REFERENCES (I.E. ASTM, ACI, AWS, ETC.) SHALL BE THE LATEST ACCEPTED VERSION, WHERE NOTED ON THESE DRAWINGS.

8. AN EXPERIENCED, LICENSED CONTRACTOR, WITH A WORKING KNOWLEDGE OF APPLICABLE CODES AND INDUSTRY ACCEPTED STANDARD PRACTICES, SHALL PERFORM THE WORK DEPICTED IN THESE DRAWINGS.

9. ALL WORK SHALL CONFORM TO THE MINIMUM STANDARDS OF THE CURRENT ACCEPTED BUILDING CODE FOUND IN THE BASIS FOR DESIGN, OTHER CODES, INDUSTRY SPECIFIC SPECIFICATIONS, AND STANDARDS LISTED HEREIN. THE CONTRACTOR SHALL COMPLY WITH REQUIREMENTS OF ALL REGULATORY AGENCIES WITH AUTHORITY OVER ANY PORTION OF THE WORK. WORK NOT SPECIFICALLY SHOWN ON THESE DRAWINGS SHALL CONFORM TO ALL APPLICABLE CODES AND ACCEPTED STANDARD PRACTICES.

10. THE CONTRACTOR SHALL VERIFY ALL DIMENSIONS, ELEVATIONS, AND CONDITIONS ON THESE DRAWINGS WITH THE ARCHITECTURAL DRAWINGS, AND ALL OTHER DISCIPLINE DRAWINGS, PRIOR TO START OF CONSTRUCTION. NOTIFY THE ENGINEER OF RECORD IN WRITING BEFORE THE START OF CONSTRUCTION REGARDING DISCREPANCIES, OMISSIONS, OR VARIATIONS, OR THEY WILL BECOME THE SOLE RESPONSIBILITY OF THE CONTRACTOR. NOTES AND THE SPECIFIC DETAILS ON THESE DRAWINGS TAKE PRECEDENCE OVER THE STRUCTURAL GENERAL NOTES, AND GENERAL DETAILS.

11. CONSTRUCTION METHODS ARE NOT INDICATED ON THESE DRAWINGS. THE CONTRACTOR SHALL BE SOLELY RESPONSIBLE FOR ALL METHODS, SEQUENCES, AND PROCEDURES OF CONSTRUCTION. THE CONTRACTOR SHALL PROVIDE ADEQUATE SHORING, BRACING, FORMWORK, ETC. AS REQUIRED FOR THE PROTECTION OF LIFE AND PROPERTY DURING CONSTRUCTION.

12. EXCAVATION PROCEDURES, INCLUDING SHORING AND PROTECTION OF ADJACENT PROPERTY, STRUCTURES, STREETS AND UTILITIES, SHALL BE PERFORMED IN COMPLIANCE WITH LOCAL BUILDING CODES, REGULATIONS AND SAFETY REQUIREMENT, AND SHALL BE THE CONTRACTOR'S RESPONSIBILITY.

13. CONSTRUCTION MATERIALS SHALL BE SPREAD OUT UNIFORMLY ON STRUCTURAL SYSTEMS, SUCH THAT DESIGN LIVE LOADS ARE NOT EXCEEDED.

14. VISITS TO THE CONSTRUCTION SITE BY THE ENGINEER OF RECORD ARE A RESOURCE FOR THE CONTRACTOR AND SHALL NOT BE CONSIDERED AS SPECIAL INSPECTION.

15. STRUCTURAL MEMBERS SHALL NOT HAVE OPENINGS, POCKETS, ETC. LARGER THAN 6" PLACED IN THEM, UNLESS SPECIFICALLY NOTED ON THESE DRAWINGS. WHEN DRAWINGS BY OTHERS SHOW ITEMS IN STRUCTURAL MEMBERS NOT SHOWN IN THE STRUCTURAL DRAWINGS, THE ENGINEER OF RECORD SHALL BE NOTIFIED IN WRITING TO DETERMINE THE APPROPRIATE SOLUTION.

16. WHERE EXISTING SURFACE COVER (E.G. ASPHALT, CONCRETE, GRAVEL, ETC.) IS DISTURBED OR REMOVED FOR THE INSTALLATION OF NEW FACILITIES (E.G. ANTENNA SUPPORT STRUCTURES, SHELTER, FUEL TANKS, ETC.), THE GROUND SURFACES SURROUNDING THE NEW FACILITIES WILL BE REPAIRED, PATCHED AND REINSTATED.

BASIS OF DESIGN

1. GOVERNING BUILDING CODE: 2014 L.A. COUNTY BUILDING CODE

2. NOT USED

3. WIND DESIGN: SEE STRUCTURAL CALCULATIONS BY TOWER MANUFACTURER.

4. SEISMIC DESIGN: SEE STRUCTURAL CALCULATIONS BY TOWER MANUFACTURER.

5. TOWER DESIGN INFORMATION: SEE STRUCTURAL CALCULATIONS BY TOWER MANUFACTURER.

FOUNDATIONS

1. THE UPPER 18" OF THE SUBSURFACE MATERIAL SHALL BE REMOVED AND REPLACE WITH COMPACT FILL.

2. FOUNDATIONS WERE DESIGNED ACCORDING TO THE MINIMUM REQUIREMENTS OF THE CURRENT ACCEPTED BUILDING CODE LISTED IN THE BASIS FOR DESIGN. A GEOTECHNICAL ENGINEER WILL BE COMMISSIONED BY GENERAL DYNAMICS TO PROVIDE A SOILS REPORT PRIOR TO THE COMPLETION OF THE STRUCTURAL DESIGN FOR THIS PROJECT. GENERAL DYNAMICS WILL NOT ASSUME ANY LIABILITY BEYOND THE MINIMUM CODE REQUIREMENTS IN THE EVENT THAT A GEOTECHNICAL REPORT IS NOT PROVIDED.

3. FOOTINGS & FOUNDATIONS:
   ALLOWABLE SOIL PRESSURE (EQ. FLUID WEIGHT): = 2000 PSF

4. ALL FORMS SHALL BE PROPERLY BRACED TO WITHSTAND THE PLACEMENT OF FRESH CONCRETE. FOOTING EXCAVATIONS SHALL BE CLEAN AND FREE FROM LOOSE DEBRIS, STANDING WATER, OR UN-COMPACTED MATERIAL AT THE TIME OF CONCRETE PLACEMENT.

5. TRENCHES AND EXCAVATIONS UNDER OR ADJACENT TO FOUNDATIONS OR SLABS SHALL BE PROPERLY BACKFILLED AND COMPACTED. UTILITY TRENCHING PARALLEL TO THE FOUNDATION SHALL BE LOCATED A MINIMUM DISTANCE EQUAL TO THE DEPTH OF THE TRENCH FROM THE FOUNDATION. THE TRENCH MAY APPROACH THE FOUNDATION AT 90 DEGREES TO THE STRUCTURE AND MAY NOT EXCEED TWO AND ONE HALF FEET WIDE. THE TRENCH APPROACH TO THE FOUNDATION MAY NOT BE LOCATED CLOSER THAN 8 FEET FROM A CORNER OF THE STRUCTURE. REFERENCE 1.11 LANDSCAPING NOTE J AND K, SHEET GN2 WITH COMPACTED TO A MINIMUM OF 95% COMPACTION.

6. THE CONTRACTOR WILL PROVIDE SUITABLE MATERIALS FOR FILL AND BACKFILL AS DEFINED IN UNIFORM SOIL CLASSIFICATION SYSTEM: AS GW, GP, SW, SP, OR SM, AND WHICH IS FREE FROM CELLULOSE MATERIALS AND DEBRIS.

7. SPECIAL INSPECTIONS;
   A. VERIFY THAT FOUNDATION EXCAVATION EXTEND TO PROPER DEPTH AND BEARING STRATA. INSPECT REINFORCING STEEL AND PLACEMENT (PERIODIC).

CONCRETE

1. THE STRUCTURAL ENGINEER OF RECORD WILL PROVIDE A MIX DESIGN FOR ALL CONCRETE POURED AND REINFORCING STEEL DESIGNS FOR ALL CONCRETE STRUCTURES ON SITE. THE CONTRACTOR WILL PROVIDE ALL REINFORCING STEEL THAT IS NEW DEFORMED BARS, CONFORMING TO ASTM A-615, GRADE 60.

2. NOT USED.

3. CONCRETE MIXES SHALL BE DESIGNED BY A CERTIFIED CONCRETE TESTING LABORATORY AND APPROVED BY THE ENGINEER OF RECORD.

4. ALL CONCRETE SHALL BE NORMAL WEIGHT 145 PCF WITH HARD-ROCK AGGREGATES.

5. MAXIMUM SLUMP SHALL BE 6 INCHES, AND THE WATER SHALL BE CLEAN AND POTABLE. PORTLAND CEMENT SHALL BE ASTM C 150 TYPE V FOR CONCRETE IN CONTACT WITH SOIL. TYPE II CEMENT MAY BE USED ELSEWHERE. ALL CEMENT IN CONTACT WITH SOIL SHALL COMPLY TO THE TABLE ABOVE REGARDING SULFATE EXPOSURE.

6. FLY ASH SHALL COMPLY WITH ASTM C 618, CLASS F, AND SHALL BE APPROVED BY THE ARCHITECT IN WRITING PRIOR TO BEING USED ON THE JOB. WHEN USED, FLY ASH CONTENT SHALL BE 15%-25%. WATER-CEMENT RATIO SHALL BE BASED ON TOTAL CEMENTITIOUS MATERIAL.

7. AGGREGATES SHALL COMPLY WITH ASTM C 33. USE 3/4 INCH MAXIMUM AGGREGATE IN STRUCTURAL CONCRETE. 1-1/2 INCH MAXIMUM IN SLABS ON GRADE AND 3/8 INCH PEA GRAVEL IN GROUTS, UNLESS SPECIFICALLY NOTED OTHERWISE ON THE PLANS, OR BY WRITTEN APPROVAL OF THE ENGINEER OF RECORD.

8. NO MORE THAN 90 MINUTES SHALL ELAPSE BETWEEN CONCRETE BATCHING AND PLACEMENT OF CONCRETE UNLESS APPROVED IN WRITING BY THE ENGINEER OF RECORD.

9. CONCRETE MIXING, PLACEMENT AND QUALITY SHALL BE PER THE CURRENT ACCEPTED CODE (LISTED IN THE BASIS FOR DESIGN). MECHANICALLY VIBRATE ALL CONCRETE. VIBRATE SLABS ON GRADE AROUND AND UNDER FLOOR DUCTS OR SIMILAR ELEMENTS.

CONCRETE (CONTINUE)

10. REMOVE ALL DEBRIS FROM FORMS BEFORE PLACING CONCRETE. CONCRETE SHALL BE CAREFULLY PLACED IN REINFORCED ELEMENTS TO AVOID SEGREGATION OF AGGREGATES. UNCONFINED FALL OF CONCRETE SHALL NOT EXCEED FIVE FEET, UNLESS APPROVED IN WRITING BY THE ENGINEER OF RECORD.

11. REINFORCING, DOWELS, BOLTS, ANCHORS, SLEEVES, EMBEDS, ETC. SHALL BE SECURELY POSITIONED IN THE FORMS PRIOR TO PLACEMENT OF CONCRETE.

12. HIGH EARLY STRENGTH CONCRETE MAY BE USED WHEN REQUESTED BY THE CONTRACTOR. MIX DESIGN DATA USING FIELD CURED SPECIMENS SHALL BE SUBMITTED FOR REVIEW AND APPROVAL.

13. PROTECT CONCRETE FROM DAMAGE OR REDUCED STRENGTH DUE TO COLD OR HOT WEATHER IN ACCORDANCE WITH ACI 305 AND 306. CONTRACTOR SHALL TAKE SPECIAL CURING PRECAUTIONS TO MINIMIZE SHRINKAGE CRACKING OF CONCRETE SLABS.

14. THE CONTRACTOR WILL PROVIDE CONCRETE THAT IS MIXED AND PLACED ONLY WHEN THE TEMPERATURE IS AT LEAST FORTY (40) DEGREES F. AND RISING. WHEN TEMPERATURE IS NINETY (90) DEGREES F. OR ABOVE, OR IS LIKELY TO RISE ABOVE NINETY (90) DEGREES F. WITHIN THE TWENTY-FOUR (24) HOUR PERIOD AFTER CONCRETE PLACEMENT, THE CONTRACTOR WILL FOLLOW RECOMMENDATIONS OF ACI 305.

15. ALTERNATIVELY, WHEN THE TEMPERATURE OF THE SURROUNDING AIR IS BELOW FORTY DEGREES (40) F., CONCRETE WILL HAVE A TEMPERATURE BETWEEN SIXTY (60) DEGREES F. AND NINETY (90) DEGREES F. WHEN PLACING CONCRETE, THE CONTRACTOR WILL FOLLOW THE RECOMMENDATIONS OF ACI 306 OR THE LATEST VERSION.

16. PIPES AND ELECTRICAL CONDUITS SHALL NOT BE EMBEDDED IN STRUCTURAL CONCRETE EXCEPT WHERE SPECIFICALLY APPROVED IN WRITING BY THE ENGINEER OF RECORD. EMBEDDED ITEMS SHALL NOT IMPAIR THE STRENGTH OF THE MEMBER.

17. SPECIAL INSPECTIONS;
    A. AT THE TIME FRESH CONCRETE IS SAMPLED TO FABRICATE SPECIMENS FOR STRENGTH TESTS- MINIMUM 3500 PSI PERFORM SLUMP AND AIR CONTENT TESTS, AND DETERMINE THE TEMPERATURE OF THE CONCRETE (CONTINUOUS).
    B. INSPECT CONCRETE PLACEMENT FOR PROPER APPLICATION TECHNIQUES (CONTINUOUS).

18. POLE FABRICATOR MUST BE CERTIFIED IN ONE OF THE FOLLOWING:
    A. CITY OF LOS ANGELES
    B. ICC
    C. AIS

19. SPECIAL INSPECTORS MUST BE LOS ANGELES COUNTY CERTIFIED. SEE STRUCTURAL DRAWINGS FOR CERTIFICATION.

20. THE STRUCTURE IS CLASSIFIED AS A RISK CATEGORY IV AND THEREFORE MUST COMPLY WITH SECTION 1704.5 OF THE 2013 CBC.

MASONRY NOTES

1. MASONRY CONSTRUCTION SHALL CONFORM TO THE REQUIREMENTS OF THE "SPECIFICATIONS FOR MASONRY STRUCTURES" (ACI 530) AND THE CALIFORNIA BUILDING CODE.

2. HOLLOW LOAD BEARING MASONRY UNITS SHALL CONFORM TO ASTM C-90, GRADE N-1 AND BE MADE WITH NORMAL WEIGHT AGGREGATE. THE MINIMUM COMPRESSIVE STRENGTH (f'm) SHALL BE 1550 PSI AT 28 DAYS, AS PERMITTED BY THE UNIT STRENGTH METHOD OF ACI 530.1.

3. FILL ALL CELLS SOLIDLY WITH GROUT. GROUT SHALL CONFORM TO ASTM C-476 AND SHALL OBTAIN A MIN 28 DAY COMPRESSIVE STRENGTH OF 2000 PSI.

4. REINFORCING STEEL SHALL BE IN ACCORDANCE WITH ASTM A-615 GRADE 60. SHOP FABRICATE REINFORCING BARS WHICH ARE SHOWN TO BE HOOKED OR BENT. PROVIDE MINIMUM LAP OF 48 X BAR DIAMETER AT ALL SPLICES UNLESS INDICATED OTHERWISE.

5. MORTAR SHALL CONFORM TO ASTM C-270, TYPE S. ALL MORTAR SHALL MEET THE "PROPORTION SPECIFICATION" OF ASTM A-270 AND BE MADE WITH PORTLAND CEMENT/LIME (NON AIR ENTRAINED)

6. PROVIDE REBAR DOWELS FROM FOUNDATIONS TO MATCH VERTICAL REINFORCEMENT SIZE AND SPACING. DOWELS SHALL HAVE STANDARD 90° HOOKS AND LAP WITH THE FIRST LIFT OF REINFORCING.

7. THE MASONRY CONTRACTOR SHALL PROVIDE ALL REQUIRED TEMPORARY BRACING DURING CONSTRUCTION.

8. SPECIAL INSPECTION REQUIRED FOR ALL CMU CONSTRUCTION. UNLESS OTHERWISE SPECIFIED.

STRUCTURAL NOTES
S1

NOTE: ALL INFORMATION IS SUBJECT TO FIELD VERIFICATION. ALL INFORMATION IS CONFIDENTIAL AND NOT FOR PUBLIC DISTRIBUTION WITHOUT EXPRESS CONSENT OF THE LOS ANGELES REGIONAL INTEROPERABLE COMMUNICATIONS SYSTEMS AUTHORITY.

LA-RICS
Los Angeles Regional Interoperable Communications System

EXPANSION BOLTS

1. ANCHORAGE OF EXPANSION BOLTS IN CONCRETE SHALL BE MINIMUM EMBEDMENT PER TABLE–1 SETTING INFORMATION. 1/2" DIAMETER EMBEDDED EXPANSION BOLTS SHALL BE PLACED @ 72" O.C. (U.N.O.) OR PER PLANS.

2. AT ALL CABINETS THERE SHALL BE A MINIMUM OF TWO BOLTS PER SIDE. ONE BOLT LOCATED NOT MORE THAN 12" OR LESS THAN SEVEN BOLT DIAMETERS FROM EACH END OF THE CORNER. A PROPERLY SIZED NUT AND WASHER SHALL BE TIGHTENED ON EACH BOLT TO THE METAL PLATE. FOR SEISMIC DESIGN CATEGORIES D–F, WASHERS SHALL BE A MINIMUM OR 0.229" THICK BY 3" SQUARE PLATE WASHER.

3. EXPANSION BOLTS SHALL BE INSTALLED NOT CLOSER THAN 6 1/2" O.C. AND SHALL BE EMBEDMENT PER TABLE–1 AND SPACED 1 3/4" FROM THE EDGE OF THE SLAB. EXPANSION BOLTS BEING INSTALLED LESS THAN 2" FROM THE EDGE OF THE CONCRETE SHALL BE HILTI KWIK BOLT 3 PER ESR–2302. SUBSTITUTIONS SHALL BE APPROVED WITH WRITTEN APPROVAL OF THE ENGINEER OF RECORD.

4. WHERE EXPANSION BOLTS HAVE BEEN DAMAGED, OR IMPROPERLY LOCATED, ONE OF THE FOLLOWING RETRO–FIT OPTIONS MAY BE USED AT THE CONTRACTORS DISCRETION.

   4.1 PROVIDE (1) 1/2" DIAMETER SIMPSON TITEN SCREW ANCHORS (ESR–1056) OR 1/2" DIAMETER ITW RAMSET/REDHEAD LDT (ER 5890) CONCRETE SCREW ANCHOR. CONCRETE SCREW ANCHORS SHALL BE EMBEDDED A MINIMUM OF 4 1/2".

   4.2 EXPANSION BOLTS OF EQUAL OR GREATER DIAMETER SHALL BE INSTALLED PER THE MANUFACTURER SPECIFICATIONS. THE BOLTS SHALL BE ONE OF THE FOLLOWING ICC–ES EVALUATION REPORTS:

   – HILTI KWIK BOLT 3 (ESR–2302)

   EQUIVALENT EXPANSION BOLTS MAY BE USED AT THE CONTRACTORS DISCRETION, PROVIDED THAT THE ALTERNATE EXPANSION ANCHORS HAVE GREATER SHEAR AND PULLOUT VALUES AT EQUAL EMBEDMENT THAN THOSE SPECIFIED ABOVE. THE EXPANSION BOLTS SHALL HAVE MINIMUM EMBEDMENT DEPTHS AS FOLLOWS:

5. DESIGN VALUES FOR EXPANSION BOLTS CAN BE FOUND WITH ICC EVALUATION REPORT DATED MAY 2015. INSTALL PER TABLE –1.

TABLE 1– SETTING INFORMATION

ANCHOR O.D.	1/2"	5/8"	3/4"
EFFECTIVE MIN. EMBEDMENT	3–1/4"	4"	4–3/4"
NOMINAL EMBEDMENT	3–5/8"	4–7/16"	4–3/4"
MIN. HOLE DEPTH	4"	4–3/4"	5–3/4"
REQUIRED TORQUE (FT–LB)	40	60	110

6. ANCHORS ARE TORQUE CONTROLLED, MECHANICAL AND EXPANSION ANCHORS. DESIGN VALUES FOR EXPANSION BOLTS CAN BE FOUND WITH ICC EVALUATION REPORT DATED MAY 2015. INSTALL PER TABLE –1.

7. THE REQUIREMENT FOR MEMBER THICKNESS, EDGE DISTANCE AND SPACING, DESCRIBED IN THESE NOTES, MUST APPLY. AN EXAMPLE OF ALLOWABLE STRESS DESIGN VALUES FOR ILLUSTRATIVE PURPOSES IS SHOW IN TABLE–2.

TABLE 2 – EXAMPLE ALLOWABLE STRESS DESIGN VALUES

		ALLOW TENSION (lbf)	
		CARBON STEEL	STAINLESS STEEL
		fc=2500 psi	
NOMINAL DIA.	EMBEDMENT DEPTH		
1/2"	2	1490	1260
	3–1/4	2420	2530
5/8"	3–1/8	2910	2910
	4	4015	4215
3/4"	3–3/4	3635	3825
	4–3/4	4690	5290

8. INSTALLATION PARAMETERS ARE PROVIDED IN TABLES 1 AND 2 AND THESE NOTES. EXPANSION BOLTS LOCATIONS MUST COMPLY WITH THESE NOTES AND PLANS AND SPECIFICATIONS AND APPROVED BY THE BUILDING OFFICIAL. ANCHORS MUST BE INSTALLED IN HOLES DRILLED INTO THE CONCRETE USING A CARBIDE–TIPPED MASONRY DRILL BITS COMPLYING WITH ANSI B212.15–1994. THE MINIMUM DRILLED HOLE DEPTH IS GIVEN IN TABLE–1. PRIOR TO INSTALLATION, DUST AND DEBRIS MUST BE REMOVED FROM THE DRILLED HOLE TO ENABLE INSTALLATION TO THE STATED EMBEDMENT DEPTH. THE ANCHOR MUST BE HAMMERED INTO THE PREDRILLED HOLE UNTIL "hnom" IS ACHIEVED. THE NUT MUST BE TIGHTENED AGAINST THE WASHER UNTIL THE TORQUE VALUES SPECIFIED IN TABLE–1 ARE ACHIEVED.

STRUCTURAL NOTES
S1.1

NOTE: ALL INFORMATION IS SUBJECT TO FIELD VERIFICATION. ALL INFORMATION IS CONFIDENTIAL AND NOT FOR PUBLIC DISTRIBUTION WITHOUT EXPRESS CONSENT OF THE LOS ANGELES REGIONAL INTEROPERABLE COMMUNICATIONS SYSTEMS AUTHORITY.

LA-RICS
Los Angeles Regional Interoperable Communications System

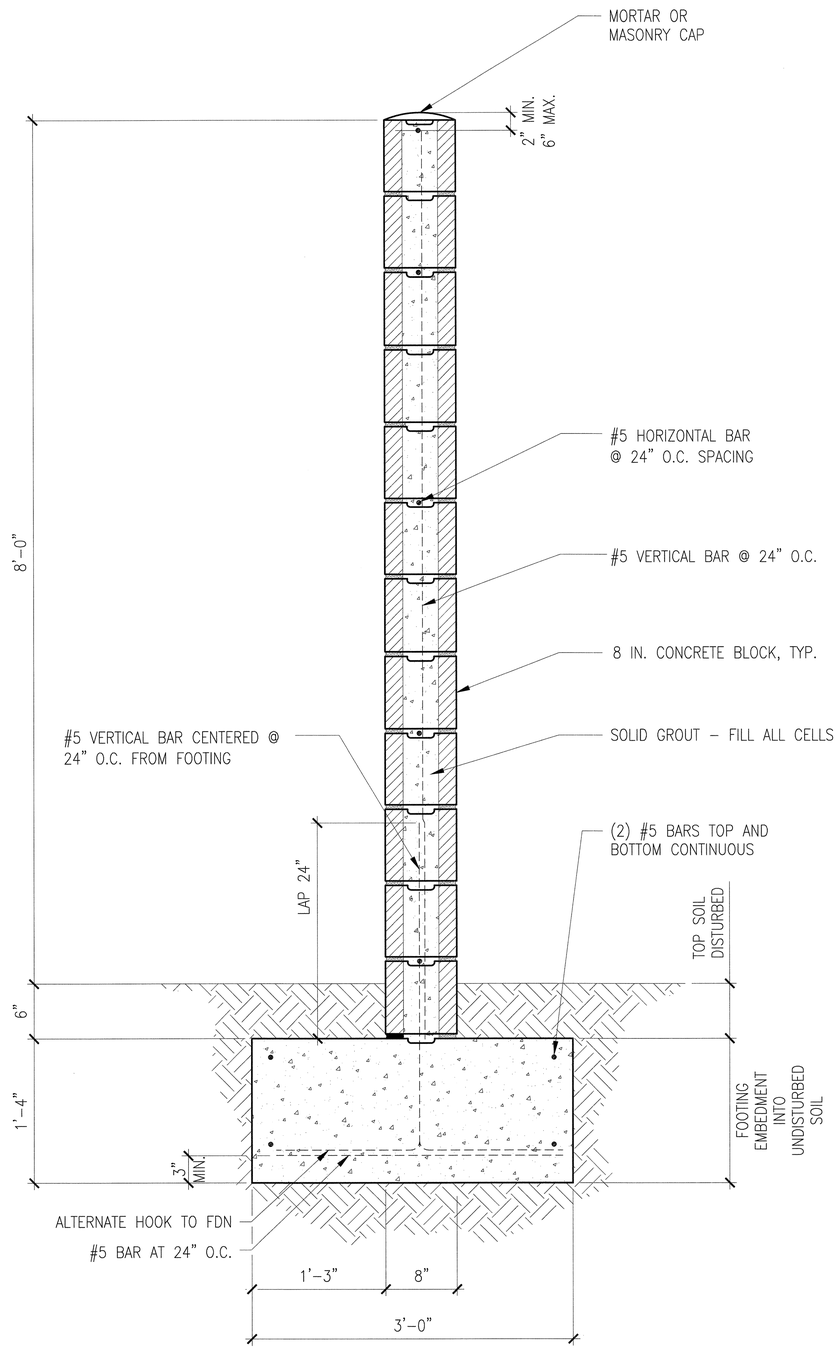

NOTES

A. CONCRETE MASONRY UNITS SHALL CONFORM TO ASTM C 90 (CBC 2103.1)

B. CONCRETE FOR FOOTINGS MUST HAVE A MINIMUM COMPRESSIVE STRENGTH OF 2,500 PSI AT 28 DAYS. (CBC 1805.4.2.1). CEMENT SHALL CONFORM TO ASTM C 150 (ACI 318-05 SECTION 3.2)

C. THE MORTAR MIX MUST HAVE A COMPRESSIVE STRENGTH EQUAL TO 1,800 PSI MINIMUM (CBC TABLE 2105.2.2.1.2).

D. GROUT MUST HAVE A COMPRESSIVE STRENGTH EQUAL TO 2,000 PSI MINIMUM. GROUT SHALL CONFORM TO TABLE 2103.12 OR TO ASTM C 476.

E. REINFORCING STEEL MUST BE DEFORMED AND COMPLY WITH ASTM A 615 (CBC 2103.13.1), GRADE 40 OR 60. WHEN ONE CONTINUOUS BAR CANNOT BE USED, A LAP OR SPLICE OF 40-BAR DIAMETERS IS REQUIRED.

F. NO SPECIAL INSPECTION IS REQUIRED FOR WOOD AND MASONRY FENCES UP TO 6 FEET IN HEIGHT. HEIGHT IS MEASURED FROM THE LOWEST GRADE ABUTTING THE FENCE.

01 **CMU WALL DETAIL**
SCALE: 3/4"=1'-0"

STRUCTURAL NOTES
S2

NOTE: ALL INFORMATION IS SUBJECT TO FIELD VERIFICATION. ALL INFORMATION IS CONFIDENTIAL AND NOT FOR PUBLIC DISTRIBUTION WITHOUT EXPRESS CONSENT OF THE LOS ANGELES REGIONAL INTEROPERABLE COMMUNICATIONS SYSTEMS AUTHORITY.

LA-RICS
Los Angeles Regional Interoperable Communications System

ELECTRICAL SPECIFICATIONS:

GENERAL:

A. CONTRACTOR SHALL PROVIDE ALL ITEMS OF LABOR AND MATERIALS TO MAKE A COMPLETE INSTALLATION OF ELECTRICAL WORK, AS SHOWN ON DRAWINGS, AS SPECIFIED, AND AS NECESSARY FOR COMPLETE SYSTEMS, INCLUDING, BUT NOT LIMITED TO THE FOLLOWING:

1. MAIN POWER BRANCH/FEEDERS AS REQUIRED.
2. BRANCH FEEDER FOR POWER AND LIGHTING.
3. ALL ELECTRICAL CONDUCTORS AND CONDUIT.
4. ALL WIRING DEVICES, SAFETY SWITCHES.
5. ALL LIGHTING FIXTURES AND LAMPS.
6. ALL COMMUNICATION EMPTY CONDUIT SYSTEMS.
7. LIGHTING SURGE PROTECTION DEVICE.
8. ANTENNA AND EQUIPMENT GROUNDING.
9. APPURTENANCES
10. POWER STUDY

ELECTRICAL REQUIREMENTS:

A. ALL WORK SHALL BE DONE IN ACCORDANCE WITH ALL LOCAL AND NATIONAL ELECTRICAL CODES.
B. ALL WORK SHALL BE COMPLETED BY A CERTIFIED MASTER ELECTRICIAN.
C. ALL WORK SHALL CONFORM TO THE LATEST VERSION OF MOTOROLA R56 STANDARDS.
D. AFTER INSTALLATION TEST ALL CONDUCTORS FOR SHORTS AND GROUNDS BEFORE ENERGIZING.

GUARANTEE:

A. THE CONTRACTOR SHALL FURNISH A WRITTEN CERTIFICATE, GUARANTEEING ALL MATERIALS, EQUIPMENT AND LABOR FURNISHED BY THE CONTRACTOR TO BE FREE OF ALL DEFECTS FOR A PERIOD OF ONE YEAR FROM AND AFTER THE DATE OF FINAL ACCEPTANCE OF ELECTRICAL WORK. THE CONTRACTOR SHALL FURTHER GUARANTEE THAT IF DEFECTS APPEAR WITHIN THE STIPULATED GUARANTEE PERIOD, SUCH WORK SHALL BE REPLACED WITHOUT COST TO OWNER.

FEEDERS, SWITCHES, METERING EQUIPMENT:

A. MAKE ARRANGEMENTS WITH OWNERS AS NEEDED TO BRING IN BRANCH FEEDERS FOR ELECTRICAL SERVICE AS SHOWN ON DRAWINGS. PAY ALL CHARGES INVOLVED THEREWITH. FURNISH INSTALL FEEDER WIRE TO OWNER DISTRIBUTION PANEL. PROVIDE METER AS SHOWN ON DRAWINGS.

PANEL BOARD CONSTRUCTION:

A. PANEL BOARDS SHALL CONSIST OF A CAN, FRONT, INTERIOR AND CIRCUIT PROTECTIVE DEVICES AND SHALL BE MANUFACTURED IN ACCORDANCE WITH UNDERWRITER'S LABORATORIES. THE GAUGE OF METAL USED AND THE GUTTER SPACE SHALL BE IN ACCORDANCE WITH APPLICABLE UL STANDARDS. EACH PANEL SHALL HAVE A DOOR MOUNTED ON A SEMI-CONCEALED HINGES WITH A CYLINDER LOCK, INDEX CARD HOLDER PROPERLY FILLED IN AS TO CIRCUIT; ALL PANELS WITH MASTER KEY. ALL PANELS SHALL BE FURNISHED WITH BAKED ON GRAY ENAMEL, OVER RUST INHIBITOR COAT. PANEL BOARDS SHALL BE AS MANUFACTURED BY G.E. ITE, SQUARE "D" OF CUTLER HAMMER.

WIRING:

A. ALL CONDUCTORS SHALL BE MADE OF SOFT-DRAWN ANNEALED COPPER WITH CONDUCTIVITY NOT LESS THAN THAT OF 90% PURE COPPER. ALL WIRE SIZE #10 AWG AND SMALLER SHALL BE STRANDED CONDUCTOR TYPE; ALL #8 AWG AND LARGER SHALL BE STRANDED CONDUCTOR TYPE.

B. CONDUCTORS SHALL BE TYPE "THHN/THWN" INSULATION.

C. USE THE FOLLOWING COLOR CODES:

120V/208V	SYSTEMS	120/240V	SYSTEMS
PHASE A	RED	PHASE A	RED
PHASE B	BLACK	PHASE B	BLACK
PHASE C	BLUE	PHASE C	BLUE
NEUTRAL	WHITE	NEUTRAL	WHITE
GROUND	GREEN	GROUND	GREEN

D. WHEN SUB-METERING FROM EXISTING SERVICE, ELECTRICIAN SHALL VERIFY AND COORDINATE WITH FACILITIES THE EXISTING PHASING AND COLOR CODE TO ENSURE CONSISTENCY.

E. INSTALL CONDUCTORS IN CLEAN, DRY CONDUITS, USE UL APPROVED PULLING LUBRICANT WHERE REQUIRED.

F. USE #12 AS MINIMUM CONDUCTOR SIZE FOR POWER SYSTEMS. ALL CONTROL WIRES SHALL BE STRANDED AND TERMINATED WITH CRIMPED-ON LUGS.

G. MAKE CONNECTION, SPLICES AND TAPS ONLY IN APPROVED BOXES AND FITTINGS. FOR SMALL BRANCH CIRCUIT CONDUCTORS, FIRST TWIST CONDUCTORS TOGETHER, THEN INSTALL A "SCOTCHLOK" OR EQUAL SPRING CONNECTOR OF PROPER SIZE. FOR LARGE CONDUCTORS USE SPLIT-BOLT OR HYDRAULICALLY COMPRESSED CONNECTIONS, THEN APPLY ENOUGH LAYERS OF VINYL ELECTRICAL TAPE TO EQUAL THE INSULATION VALUE OF THE CONDUCTOR INSULATION.

H. WHERE FACTORY COLOR CODED CONDUCTORS ARE NOT AVAILABLE, INSTALL BANDS OF COLORED VINYL PLASTIC TAPE AT EACH END OF EACH CONDUCTOR.

CONDUIT:

A. PROVIDE A COMPLETE ASSEMBLY OF CONDUIT, TUBING OR DUCT WITH FITTINGS, INCLUDING, BUT NOT LIMITED TO CONNECTORS, NIPPLES, COUPLINGS, LOCKNUTS, BUSHINGS, EXPANSION FITTINGS, OTHER COMPONENTS AND ACCESSORIES AS NEEDED.

B. FITTINGS SHALL BE DESIGNED AND APPROVED FOR THE SPECIFIC USE INTENDED. PROVIDE INSULATED THROATS OR BUSHINGS FOR ALL CONDUITS. GROUNDING BUSHINGS SHALL ALSO HAVE INSULATED THROATS.

C. MINIMUM CONDUIT SIZE IN ALL CASES SHALL BE 1/2" UNLESS MINIMUM SIZE IS SPECIFIED TO BE LARGER FOR SPECIFIC SYSTEMS SPECIFIED ELSEWHERE IN THE SPECIFICATIONS OR ON THE DRAWINGS.

D. RIGID STEEL CONDUIT SHALL BE HEAVY-WALL STEEL TUBE WITH METALLIC CORROSION-RESISTANT COATING ON INTERIOR AND EXTERIOR, HOT DIPPED GALVANIZED, FREE FROM DEFECTS, MANUFACTURED IN ACCORDANCE TO ANSI STANDARDS, AND UL-LISTED. USE THREADED COUPLINGS. USE RIGID GALVANIZED STEEL CONDUIT IN ALL LOCATIONS UNLESS NOTED OTHERWISE.

E. UNDERGROUND CONDUIT SHALL BE SCHEDULE 40 PVC (UNLESS NOTED OTHERWISE). ALL ABOVE GROUNDING CONDUITS TO BE RIGID CONDUIT.

F. AS A MINIMUM, CONDUIT SIZES SHALL BE IN ACCORDANCE WITH NEC CONDUIT FILL REQUIREMENTS, REGARDLESS OF SIZE SCHEDULE OR INDICATED. IF LARGER SIZE IS SCHEDULED OR INDICATED, THE LARGER SIZE SHALL BE USED.

G. INSTALLATION:

1. ANCHOR CONDUIT WITH HANGERS, CONDUIT STRAPS OR OTHER DEVICES SPECIFICALLY DESIGNED FOR THE PURPOSE. WIRE TIES SHALL NOT BE PERMITTED. USE OF TRAPEZE HANGERS FOR MULTIPLE PARALLEL CONDUIT RUNS.
2. ALL CONCRETE INSERTS SHALL BE GALVANIZED OR CADMIUM PLATED; INDIVIDUAL HANGERS, TRAPEZE HANGERS AND RODS SHALL BE PRIME COATED.
3. INSTALL HORIZONTAL RUNS OF CONDUIT TO PROVIDE A NATURAL DRAIN TO PREVENT MOISTURE COLLECTING IN THE POCKETS OR TRAPS.
4. CAP CONDUCTOR ENDS UNTIL THE CONDUCTOR IS INSTALLED TO PREVENT FOREIGN OBJECTS FROM ENTERING CONDUIT.
5. FITTINGS AND CONDUITS SHALL BE APPROVED FOR GROUNDING PURPOSES OR SHALL BE JUMPERED WITH A COPPER GROUNDING CONDUCTOR OF PROPER AMPACITY. LEAVE TERMINATION OF SUCH JUMPERS EXPOSED.
6. INSTALL (2) 200 POUND NYLON PULL CORDS IN ROUGH-IN RACEWAYS.
7. INSTALL OFFSETS, PULL BOXES AND ELBOWS AS REQUIRED TO ACCOMPLISH A HARMONIOUS ROUTING OF THE SYSTEMS.

JUNCTION AND PULL BOXES:

A. USE GALVANIZED PULL AND JUNCTION BOXES THAT COMPLY WITH NEC AS TO SIZE AND CONSTRUCTION.

B. FOR JUNCTION AND PULL BOXES, USE BOXES NOT LESS THAN 4" SQUARE AND 1 1/2" DEEP WITH REMOVABLE COVERS.

C. EXTERIOR, USE CAST ALUMINUM OR CAST IRON BOXES WITH THREADED HUBS AND GASKETED COVERS

D. INSTALL JUNCTION AND PULL BOXES IN ACCESSIBLE LOCATIONS. POSITION BOXES SO COVERS CAN BE REMOVED.

E. INSTALL BOXES ON CONCEALED CONDUITS WITH COVERS FLUSH WITH FINISH.

ALARM AND STATUS SENSORS

1. THE CONTRACTOR WILL PROVIDE SHELTER ALARM AND STATUS SENSORS, AT A MINIMUM, TO INCLUDE THE FOLLOWING SENSORS:

A. IONIZATION SENSOR(S) AS REQUIRED IN EACH CABINET FOR SMOKE DETECTION. THE NUMBER OF SENSORS WILL CONFORM TO THE REQUIRED APPLICABLE CODE.
B. A HYDROGEN SENSOR IF NEEDED DUE TO TYPE OF BATTERY SYSTEM.
C. A HUMIDITY MONITORING SENSOR
D. SHELTER/CABINET DOOR INTRUSION DETECTION SENSOR.
E. HIGH AND LOW TEMPERATURE MONITORING SENSORS.
F. AN INTERFACE TO THE CAMERA ACTIVATION ALARM (IF APPLICABLE).
G. SLEEPY CELL CONDITION (OPERATING CELL, BUT NO USER TRAFFIC AFTER AN AUTHORITY DEFINED PERIOD OF TIME)
H. HIGH VOLTAGE STANDING WAVE RATIO (VSWR)
I. ANY PSBN COMPONENT FAILURE
J. SMOKE AND/OR FIRE ALARMS
K. INDOOR TEMPERATURE AND ALARMS
L. OUTDOOR TEMPERATURE
M. CLIMATE CONTROL ALARMS
N. CABINET INTRUSION
O. EXTERIOR MOTION DETECTOR ALARMS
P. TOWER LIGHTING
Q. INTERCONNECT EQUIPMENT
R. LOW/LOW BATTERY VOLTAGE FOR EACH BATTERY
S. UPS AUTOMATIC BYPASS OPERATION
T. RECTIFIER/INVERTER FAILURE
U. UPS COMMON TRIP ALARM (FORM C)
V. HIGH/LOW BATTERY TEMPERATURE FOR EACH BATTERY
W. LOW/HIGH -48 VDC
X. ALL RECTIFIER ALARMS
Y. LOW/HIGH TEMPERATURE OF THE -48 VDC SYSTEM
Z. GENERATOR FUEL LEVEL
AA. GENERATOR LOW FUEL ALARMS
AB. GENERATOR FUEL OVERFILL ALARMS
AC. GENERATOR BATTERY ALARMS
AD. GENERATOR ONLINE ALARMS
AE. GENERATOR HIGH TEMPERATURE ALARMS
AF. GENERATOR OVER CRANK ALARMS
AG. GENERATOR OVER SPEED ALARMS
AH. GENERATOR LOW OIL ALARMS
AI. GENERATOR TRANSFER SWITCH STATUS
AJ. AC SURGE SUPPRESSION ALARM INDICATION
AK. MASTER TIME SOURCE LOSS OF SYNC
AL. VOLTAGE STANDING WAVE RATION (VSWR) ON OUTPUT OF THE COMBINING SYSTEM
AM. LOW FORWARD POWER
AN. HIGH REFLECTED POWER
AO. INTERFERENCE MONITORING
AP. LOSS OF CONNECTIVITY ON ANY MICROWAVE OR BACKHAUL LINK
AQ. LOSS OF CONNECTIVITY TO THE INTERNET
AR. POWER AMPLIFIER FAILURE AND HIGH/LOW VOLTAGE
AS. ALARMS FROM SITE FREQUENCY AND TIME STANDARDS (E.G., GPS, ETC.).

2. THE CONTRACTOR WILL PROVIDE AND INSTALL SENSORS AND ALARMS THAT SHALL BE WIRED AND CONNECTED TO THE ALARM INTERFACE PANEL.

3. THE CONTRACTOR WILL PROVIDE SHELTERS TO INCLUDE APPROPRIATE HANDHELD FIRE EXTINGUISHER(S) PER CODE. THE FIRE EXTINGUISHER CERTIFICATION WILL BE CURRENT AS OF THE TIME OF THE ACCEPTANCE TESTING OF THE SITE.

4. THE CONTRACTOR WILL PROVIDE FIRE SUPPRESSION EQUIPMENT FOR ALL NEW CONTRACTOR PROVIDED LTE SYSTEM SHELTERS AND, SO LONG AS AN EXISTING SHELTER IS COMPLIANT WITH THE CURRENT APPLICABLE FIRE SUPPRESSION CODE, CONTRACTOR WILL PROVIDE ANY MODIFICATIONS TO EXISTING LTE SYSTEM SHELTERS REQUIRED DUE TO THE ADDITION OF THE CONTRACTOR SUPPLIED EQUIPMENT OR ADDITIONAL SQUARE FOOTAGE ADDED TO THE EXISTING SHELTER FOR THE PURPOSE OF CONTRACTOR SUPPLIED EQUIPMENT.

5. AT EXISTING FACILITIES, CONTRACTOR TO COORDINATE WITH FACILITY MAINTENANCE COMPETENT PARTY TO COLLECT ALL EXISTING ALARM PANEL INFORMATION REQUIRED FOR INTEGRATION.

[redacted]

[redacted]

NOTE: ALL INFORMATION IS SUBJECT TO FIELD VERIFICATION. ALL INFORMATION IS CONFIDENTIAL AND NOT FOR PUBLIC DISTRIBUTION WITHOUT EXPRESS CONSENT OF THE LOS ANGELES REGIONAL INTEROPERABLE COMMUNICATIONS SYSTEMS AUTHORITY.

ELECTRICAL GENERAL NOTES

E1

[redacted]

LA-RICS
Los Angeles Regional Interoperable Communications System

[redacted]

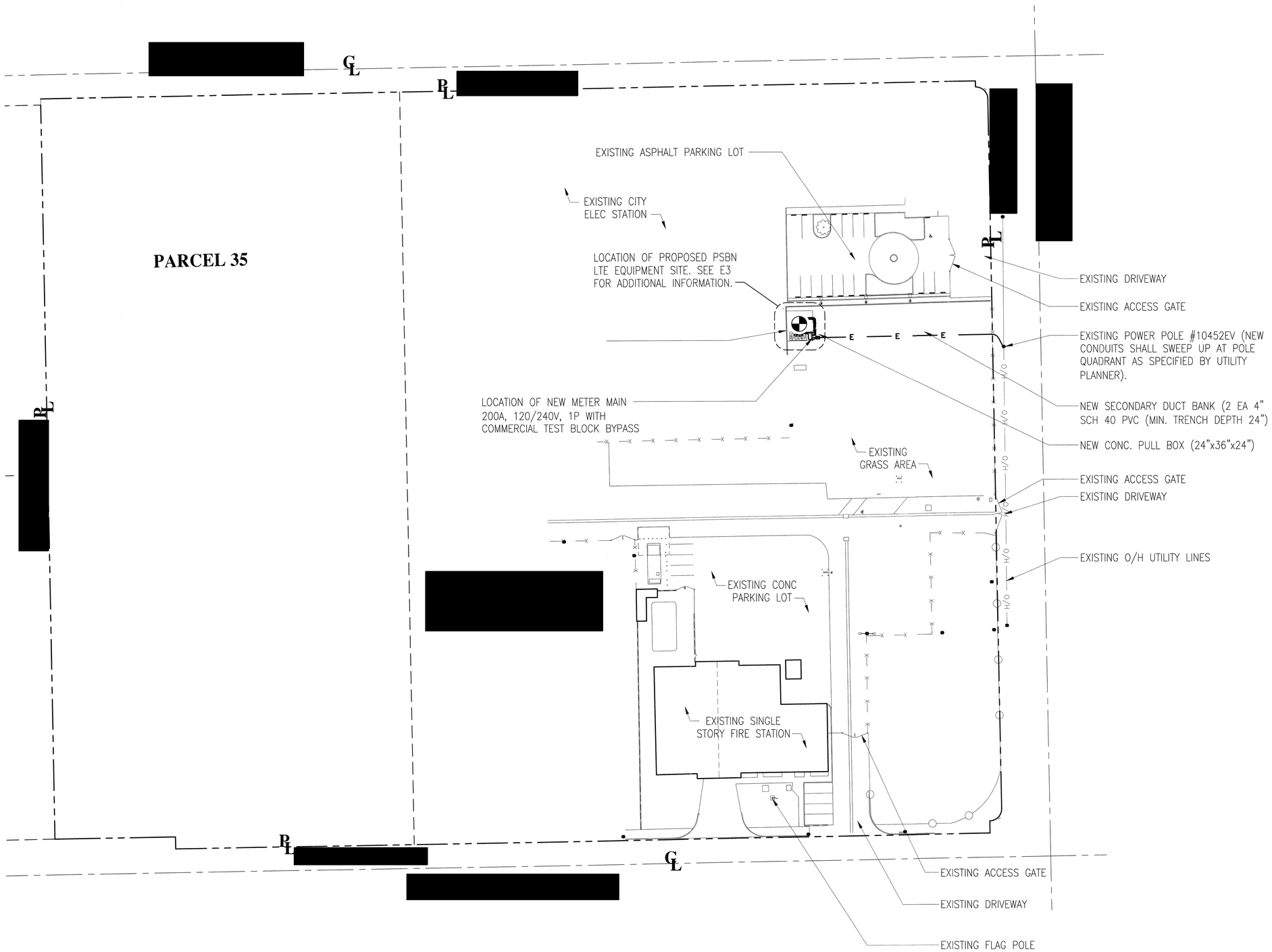

01 **UTILITY ROUTING PLAN**
SCALE: 1"=10'

10 0 5 10
SCALE: 1"= 10'

NOTE: ALL INFORMATION IS SUBJECT TO FIELD VERIFICATION. ALL INFORMATION IS CONFIDENTIAL AND NOT FOR PUBLIC DISTRIBUTION WITHOUT EXPRESS CONSENT OF THE LOS ANGELES REGIONAL INTEROPERABLE COMMUNICATIONS SYSTEMS AUTHORITY.

[redacted]

UTILITY
ROUTING PLAN
E2

NOTE: ALL INFORMATION IS SUBJECT TO FIELD VERIFICATION. ALL INFORMATION IS CONFIDENTIAL AND NOT FOR PUBLIC DISTRIBUTION WITHOUT EXPRESS CONSENT OF THE LOS ANGELES REGIONAL INTEROPERABLE COMMUNICATIONS SYSTEMS AUTHORITY.

Underground Service Alert

Call: TOLL FREE
1-800
422-4133
TWO WORKING DAYS BEFORE YOU DIG

NOTIFY DIG-ALERT OR PRIVATE LOCATING COMPANY PRIOR TO ANY EXCAVATING OR TRENCHING

LA-RICS
Los Angeles Regional Interoperable Communications System

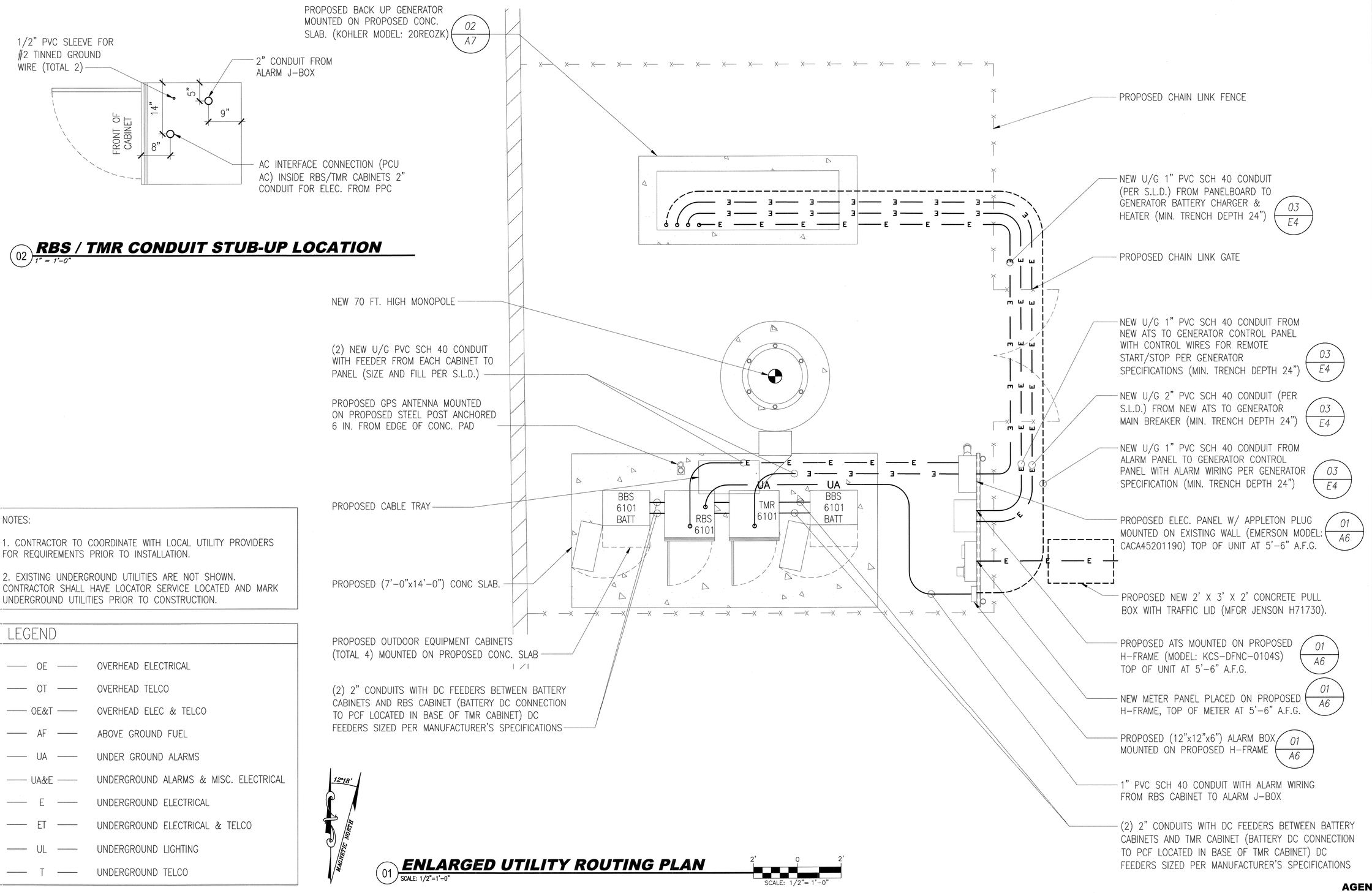

NOTES:

1. CONTRACTOR TO COORDINATE WITH LOCAL UTILITY PROVIDERS FOR REQUIREMENTS PRIOR TO INSTALLATION.

2. EXISTING UNDERGROUND UTILITIES ARE NOT SHOWN. CONTRACTOR SHALL HAVE LOCATOR SERVICE LOCATED AND MARK UNDERGROUND UTILITIES PRIOR TO CONSTRUCTION.

LEGEND

OE	OVERHEAD ELECTRICAL
OT	OVERHEAD TELCO
OE&T	OVERHEAD ELEC & TELCO
AF	ABOVE GROUND FUEL
UA	UNDER GROUND ALARMS
UA&E	UNDERGROUND ALARMS & MISC. ELECTRICAL
E	UNDERGROUND ELECTRICAL
ET	UNDERGROUND ELECTRICAL & TELCO
UL	UNDERGROUND LIGHTING
T	UNDERGROUND TELCO

ENLARGED UTILITY ROUTING PLAN
E3

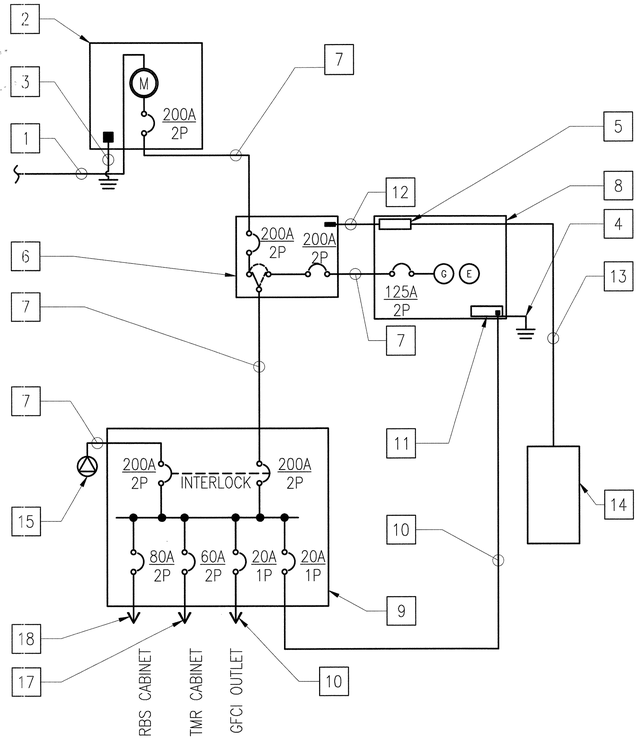

SINGLE LINE DIAGRAM NOTES::

1. (2) 4" CONDUIT ONLY WITH PULL ROPE TO EXISTING UTILITY POLE.
2. NEW WEATHERPROOF METER PANEL RATED 200A, 120/240V, 1 PHASE, 3 WIRE COMPLETE WITH 200A FUSED PULL OUTS TYPE JJN
3. NEW MAIN ELECTRICAL SERVICE GROUND 5/8" x 8'-0" COPPERCLAD STEEL GROUND ROD WITH 1#4 COPPER STRANDED GROUND
4. PROVIDE CALDWELD GROUND CONNECTION TO GROUND RING WITH GENERATOR GROUND LUG USE (1) #2 SOLID TINNED COPPER GROUND AND DOUBLE LUG CONNECTOR.
5. NEW GENERATOR CONTROL PANEL
6. PROVIDE/INSTALL NEW AUTOMATIC TRANSFER SWITCH RATED 200A, 120/240V, 1PH, 3 WIRE WITH NEMA 3R RATED HOUSING (MODEL: KCS-DFNC-104S).
7. NEW 2" CONDUIT WITH (3) #3/0 + (1)#4 GND THHN COPPER
8. NEW 22KW GENERATOR, 120/240V, 1 PHASE, 3 WIRE (MANUFACTURER KOHLER, NO EQUAL)
9. NEW WEATHERPROOF LOAD CENTER COMPLETE WITH MANUAL TRANSFER SWITCH (WALKING BEAM INTERLOCK), SURGE SUPRRESSION, 120/240V, 1 PHASE, 3W COMPLETE WITH BREAKERS PER PANEL SCHEDULE (EMERSON MFGR #CACA45201190)
10. NEW 1" CONDUIT WITH (2)#12 + (1)#12 GND THHN COPPER
11. NEW GENERATOR BATTERY CHARGER/HEATER
12. NEW 1" CONDUIT WITH 1 PAIR #18 AWG FOR GENERATOR START / STOP
13. NEW 1" CONDUIT WITH 6 PAIR CAT 5 ALARM CABLING (SEE GENERATOR ALARM WIRING DIAGRAMS)
14. NEW 12"x12"x6" ALARM BOX
15. NEW APPLETON GENERATOR RECEPTACLE RATED 200A, 120/240V, 1PHASE, 3POLE
16. PROVIDE CALDWELD GROUND CONNECTION TO GROUND RING WITH GENERATOR GROUND LUG USE (1) #2 SOLID TINNED COPPER GROUND AND DOUBLE LUG CONNECTOR.
17. 1" CONDUIT WITH (3)#6 + (1)#8 GND THHN COPPER
18. 1" CONDUIT WITH (3)#4 + (1)#6 GND THHN COPPER

01 SINGLE LINE DIAGRAM
SCALE: NTS

NOTE: ALL INFORMATION IS SUBJECT TO FIELD VERIFICATION. ALL INFORMATION IS CONFIDENTIAL AND NOT FOR PUBLIC DISTRIBUTION WITHOUT EXPRESS CONSENT OF THE LOS ANGELES REGIONAL INTEROPERABLE COMMUNICATIONS SYSTEMS AUTHORITY.

SITE ID: VEFD001	SITE NAME: VERNON FIRE STATION 1	ADDRESS: 3375 FRUITLAND AVE. VERNON, CA 90058

200A, 120/240, 1PHASE, 3WIRE WITH 200A/2P MAIN BREAKER

DESCRIPTION	A/P	NO.	LOAD A	LOAD B	NO.	A/P	DESCRIPTION
TVSS 20A	20/1	1	100		2	20/1	GFCI 20A
RBS CABINET	80/2	3		4080	4	60/2	TMR CABINET
		5	4080	3750	6		
GEN BATTERY CHARGER & HEATER	20/1	7		360	8	20/1	TOWER LIGHTING
NOT USED		9	–	–	10	20/1	GFCI @ TOWER LIGHT
NOT USED		11		–	12		NOT USED
NOT USED		13	–		14		NOT USED
NOT USED		15		–	16		NOT USED
NOT USED		17	–		18		NOT USED
NOT USED		19		–	20		NOT USED
NOT USED		21	–		22		NOT USED
NOT USED		23		–	24		NOT USED
			8,290	8,190			

02 PANEL SCHEDULE
SCALE: NTS

NOTES:
1. SELECTED BACKFILL OF ROCK FREE SOIL SHALL BE PLACED IN 6 IN LAYERS AT A TIME AND EACH LAYER WELL TAMPED

2. ALL HORIZONTAL RUNS OF UNDERGROUND CONDUITS SHALL BE SCHEDULE 40 PVC UNLESS INSTALLING UNDER ROAD BED OR ANY TRAFFIC AREAS WHERE IT SHALL BE SCHEDULE 80 PVC. CONDUIT SUPPLIED AND INSTALLED BY CONTRACTOR.

3. ALL ABOVE GRADE CONDUIT SHALL BE RIGID METAL CONDUIT.

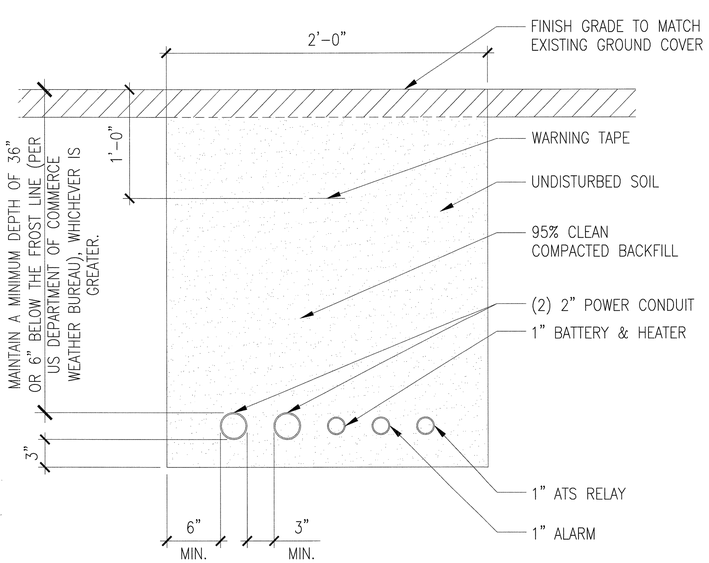

03 TYPICAL TRENCH
SCALE: NTS

NOTES:
1. SELECTED BACKFILL OF ROCK FREE SOIL SHALL BE PLACED IN 6 IN LAYERS AT A TIME AND EACH LAYER WELL TAMPED

2. ALL HORIZONTAL RUNS OF UNDERGROUND CONDUITS SHALL BE SCHEDULE 40 PVC UNLESS INSTALLING UNDER ROAD BED OR ANY TRAFFIC AREAS WHERE IT SHALL BE SCHEDULE 80 PVC. CONDUIT SUPPLIED AND INSTALLED BY CONTRACTOR.

3. ALL ABOVE GRADE CONDUIT SHALL BE RIGID METAL CONDUIT.

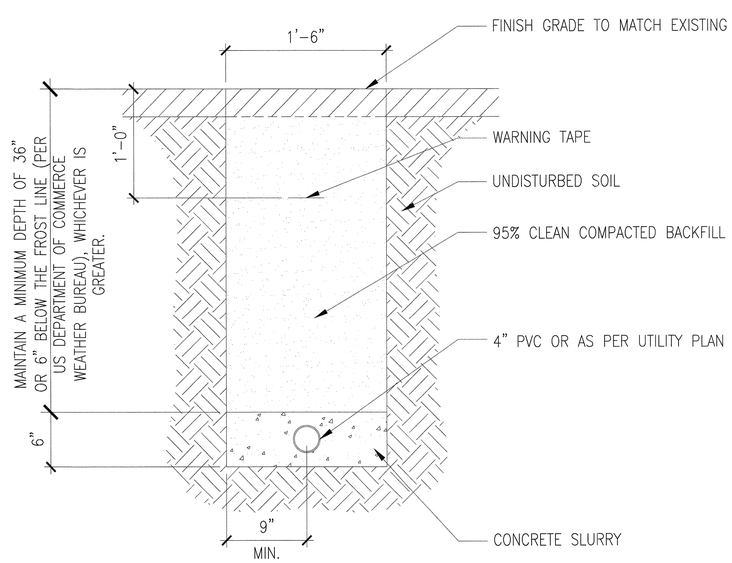

04 MAIN POWER TRENCHING
SCALE: NTS

LA-RICS
Los Angeles Regional Interoperable Communications System

SINGLE LINE DIAGRAM & DETAILS

E4

GROUNDING

GENERAL

A. GROUNDING SHALL BE INSTALLED PER [redacted] STANDARDS AND GUIDELINES FOR COMMUNICATIONS SITES.

B. ALL GROUNDING TO BE INSPECTED BY [redacted] AUTHORITY PRIOR TO BACKFILL.

CONNECTIONS

A. ALL EXTERNAL GROUNDING CONNECTIONS SHALL BE MADE BY THE EXOTHERMIC PROCESS, BY IRREVERSIBLE HIGH COMPRESSION, AND/OR BY 2-HOLE LONG BARREL LUGS. NO SINGLE=HOLE, CRIMP-ON, OR SOLDER CONNECTIONS SHALL BE USED. CONNECTIONS SHALL INCLUDE ALL CABLE TO CABLE SPLICE, ALL MATERIALS USED (MOLDS, WELDING METAL, TOOLS, ETC.) SHALL BE INSTALLED PER MANUFACTURER'S RECOMMENDATIONS AND PROCEDURES.

B. ALL INTERIOR GROUNDING AND BONDING CONDUCTORS SHALL BE CONNECTED BY TWO HOLE – TYPE (COMPRESSION) CONNECTIONS. MECHANICAL CONNECTIONS, FITTINGS OR CONNECTIONS THAT DEPEND SOLELY ON SOLDER SHALL NOT BE USED.

GROUND BARS

A. ALL GROUND BARS SHALL BE 1/4" THICK BARE TINNED PLATED AND OF SUFFICIENT SIZE TO GROUND ATTACHMENTS INDICATED IN THE DRAWINGS (MIN. 2 X 12"). HOLES SHALL BE 7/16" DIAMETER ON 3/4" CENTERS TO PERMIT THE CONVENIENT USE OF TWO-HOLE LUGS.

B. THE METHOD OF ATTACHMENT OF THE GROUNDING ELECTRODE CONDUCTOR TO EXTERIOR AND TOWER GROUND BARS SHALL BE EXOTHERMIC OR IRREVERSIBLE HIGH COMPRESSION.

CABLES

A. ALL GROUNDING CABLES SHALL BE STANDARD #2 AWG TINNED SOLID BARE COPPER WIRE UNLESS INDICATED OTHERWISE ON DRAWINGS.

B. WHEN THE DIRECTION OF THE CONDUCTOR MUST CHANGE, IT SHALL BE DONE GRADUALLY. ALL BENDS SHALL BE MADE WITH THE GREATEST PRACTICAL RADIUS AND SHALL NOT BE LESS THAN 8".

C. ALL CONDUITS SHALL BE METALLICALLY SUPPORTED.

D. ALL CONDUITS USED AS RACEWAYS FOR GROUNDING CONDUCTORS SHALL BE SEALED AT BOTH ENDS IN ACCORDANCE WITH THE NATIONAL ELECTRICAL CODE (NEC).

E. PROVIDE WIRE PROTECTION PIPES AT ALL GROUND WIRES AT GRADE LEVEL PER DETAIL.

GROUND RING

A. THE GROUND RING ENCIRCLING THE BUILDING SHALL BE A MINIMUM SIZE OF 2 AWG BARE TINNED SOLID COPPER CONDUCTOR IN DIRECT CONTACT WITH THE EARTH AT A MINIMUM DEPTH OF 30 INCHES OR 6 INCHES BELOW FROST LINE. CONDUCTOR BENDS SHALL HAVE A MINIMUM RADIUS OF 8 INCHES.

B. ALL EXTERNAL GROUND RINGS ARE TO BE JOINED TOGETHER AND ALL CONNECTIONS SHALL BE EXOTHERMIC OR IRREVERSIBLE HIGH COMPRESSION. NO LUGS OR CLAMPS WILL BE ACCEPTED.

FENCE/GATE

A. GROUND ALL SECTIONS OF FENCE AND GATE AS INDICATED ON DRAWINGS. GROUND EACH GATE POST AND CORNER POST. ALL CONNECTIONS FOR THE FENCE GROUND SYSTEM SHALL BE EXOTHERMIC WELD AND INSTALLED PER MANUFACTURER'S RECOMMENDATIONS AND PROCEDURES.

DISSIMILAR METALS

A. BONDING OF TWO DISSIMILAR METALS MAY RESULT IN GALVANIC CORROSION. A REACTION THAT OCCURS AT THE JUNCTION OF THE DISSIMILAR METALS WHEN THEY ARE EXPOSED TO MOISTURE. THE DEGREE AND RATE OF CORROSION DEPENDS ON THE RELATIVE POSITION OF THE METALS IN THE ELECTROCHEMICAL SERIES. TO DETERMINE THE LIKELIHOOD OF TWO METALS REACTING REFERENCE SECTION 6.5.2 IN THE R56 SPECIFICATIONS.

1. THE SAME METAL SHALL BE USED THROUGHOUT THE SYSTEM WHEN POSSIBLE.
2. EXOTHERMICALLY WELD CONNECTIONS OF DIFFERENT METALS WHEN WELD MATERIAL IS AVAILABLE FOR THE METALS BEING BONDED.
3. COPPER CONDUCTORS SHALL NOT BE INSTALLED ON ALUMINUM ROOFING OR SIDING.
4. ALUMINUM AND COPPER SHALL NOT BE DIRECTLY CONNECTED TO EACH OTHER UNLESS USING EXOTHERMIC WELDING MATERIALS SPECIFICALLY INTENDED FOR THESE TWO METALS TO MAKE THE CONNECTION. ALUMINUM AND COPPER MAY BE JOINED WITH THE USE OF A LISTED BIMETALLIC TRANSITION CONNECTOR OF STAINLESS STEEL. THESE CONNECTORS SHALL BE LISTED FOR THE SIZE AND NUMBER OF CONDUCTORS AND MARKED WITH AL/CU. THESE CONNECTIONS SHALL BE LIBERALLY COATED WITH A CONDUCTIVE ANTIOXIDANT AT THE POINT OF INSERTION INTO THE CONNECTOR.
5. COPPER SHALL NOT COME IN CONTACT WITH GALVANIZED STEEL.
6. TINNED COPPER SHALL BE USED WHEN CONNECTING TO A GALVANIZED STEEL STRUCTURE.

ANTI-OXIDANT

A. ANTI-OXIDANT COMPOUND SHALL BE USED BETWEEN ALL EXTERNAL MECHANICAL CONNECTIONS. CARE SHALL BE TAKEN TO USE THE APPROPRIATE ANTI-OXIDANT TYPE. IN GENERAL, ZINC ANTI-OXIDANT (GRAY COLOR) SHALL BE USED WHEN CONNECTING TO GALVANIZED AND ALUMINUM OBJECTS AND COPPER ANTI-OXIDANT (COPPER COLOR) SHALL BE USED WHEN CONNECTING TO COPPER OBJECTS.

TEST PROCEDURE

A. THE GROUND SYSTEM RESISTANCE SHALL NOT EXCEED 5 OHMS. TESTING SHALL BE PERFORMED IN ACCORDANCE WITH MOTOROLA R56 SPECIFICATIONS (DATED SEPTEMBER 1, 2005).

1. CLAMP-ON RESISTANCE OR INDUCED FREQUENCY TESTS WITH CLAMP-ON GROUND RESISTANCE TESTER.
2. GROUNDING RESISTANCE FOR THE GROUNDING SYSTEM WILL BE 5 OHMS OR AS REQUIRED BY THE TELECOMMUNICATIONS EQUIPMENT MANUFACTURER(S), WHICHEVER IS LEAST.

B. GROUND TEST MUST BE PERFORMED PRIOR TO UTILITY CONNECTION AND GROUND CONNECTION TO EXISTING SITE COMMON GROUNDING ELECTRODE SYSTEM.

GROUNDING SYSTEMS

A. EXAMINATION: VERIFY THAT SURFACES ARE READY TO RECEIVE WORK AND THAT THE FIELD MEASUREMENTS ARE AS SHOWN ON SHOP DRAWINGS & R56 COMPLIANT.

B. INSTALLATION – INSTALL AS INDICATED ON THE DRAWINGS AND AS REQUIRED PER R56 REQUIREMENTS:

1. GROUNDING NETWORK SYSTEM SHALL INCLUDE ELECTRICAL TRENCHING, BACK FILL AND COMPACTION PER THIS SECTION; GROUNDING WIRE, GROUNDING ELECTRODES AND ALL NECESSARY MATERIALS AND LABOR REQUIRED TO COMPLETE THE SPECIFIED SYSTEM. PER R56 SPECS.

2. ALL GROUND CONNECTIONS SHALL CONFORM TO I.E.E.E. STD 837 AND/ OR UL467 PROTECTED FROM CORROSION AS NOTED ON DRAWINGS. USE EXOTHERMIC OR DOUBLE LUG FOR OUTDOORS ABOVE AND BELOW GRADE, INDOORS, AND ON ROOF INSTALLATIONS, AS INDICATED ON PLANS.

3. ALL CLAMP CONNECTIONS SHALL BE MADE ACCESSIBLE FOR INSPECTION. USE ONLY WHERE SPECIFIED.

4. ALL UNDERGROUND CONNECTIONS SHALL BE INSPECTED BY GENERAL DYNAMICS / MOTOROLA REPRESENTATIVES PRIOR TO BACK FILLING IF POSSIBLE WITHOUT DELAYING THE PROJECT SCHEDULE.

5. IF ROCK IS ENCOUNTERED, GROUND ROD SHALL BE INSTALLED IN A 2 INCH DIAMETER DRILLED HOLE TO THE REQUIRED DEPTH AND BACK FILLED WITH APPLICATIONS OF MAGNESIUM SULFATE OR COPPER SULFATE (IF XIT GROUNDING IS NOT USED).

6. GROUNDING WIRE SHALL NOT BEND LESS THAN 90° IN ANY LOCATION WITH A MINIMUM BEND RADIUS OF 8".

7. PROVIDE CORROSION PROOFING PAINT ON SURFACES EXPOSED DURING INSTALLATION.

8. ALL ABOVE GROUND CONNECTIONS SHALL BE BOLTED, CLAMP OR BURNDY CONNECTIONS UNLESS OTHERWISE NOTED. ALL BELOW GROUND CONNECTIONS SHALL BE EXOTHERMIC WELDED. PROVIDE CORROSION PROTECTION.

9. ALL GROUND CONNECTIONS TO THE GROUND BAR SHALL BE MADE WITH DOUBLE HOLE HYDRAULICALLY INDENTED LUGS, EXCEPT FOR TWO EXOTHERMIC WELDS, AS SHOWN ON PLANS.

10. WHERE GROUND CONNECTIONS ARE MADE, THE CONTACT POINTS ARE TO BE CLEANED AND MADE FREE OF FOREIGN MATERIALS, SUCH AS PAINT AND CORROSION, TO ENSURE AN ADEQUATE BOND.

11. MOTOROLA R-56 STANDARDS SHALL BE USED AS A GUIDELINE FOR GROUNDING, BONDING, INSTALLATION, AND CONNECTIONS.

12. ALL MECHANICAL GROUNDING CONNECTIONS MADE THROUGHOUT THESE DRAWINGS SHALL BE MADE WITH COPPER-SHIELD. THERE IS NO EQUIVALENT FOR THESE ANTI-OXIDATION COMPOUNDS. NO OTHER COMPOUND WILL BE ACCEPTED. COATED ALL WIRES BEFORE LUGGING. COAT ALL SURFACES BEFORE CONNECTING.

C. FIELD QUALITY CONTROL – FIELD INSPECTION AND TESTING WILL BE PERFORMED AS REQUIRED.

1. THE CONTRACTOR SHALL VERIFY THAT THE SYSTEM IS EFFECTIVELY GROUNDED, MEETS NEC ARTICLE 250 REQUIREMENTS, AND IS ACCEPTABLE TO THE LOCAL UTILITY AND LOCAL AUTHORITY HAVING JURISDICTION.

2. THE CONTRACTOR SHALL MAKE ALL MEASUREMENTS REQUIRED TO TEST THE GROUNDING NETWORK SYSTEM. SYSTEM SHALL BE TESTED AT THE TIME OF INSTALLATION.

3. THE GROUNDING NETWORK SYSTEM TEST PROCEDURE SHALL COMPLY WITH CLAMP-ON RESISTANCE OR INDUCED FREQUENCY TESTS WITH CLAMP-ON GROUND RESISTANCE TESTER, EXCEPT AS MODIFIED HEREIN.

4. CONTRACTOR SHALL VERIFY THE ADEQUACY OF THE INSTALLED SYSTEM. CONTRACTOR SHALL CONDUCT "SITE RESISTANCE TO EARTH GROUNDING TESTING" PER R-56 STANDARD. INSTALLED SYSTEM SHALL ACHIEVE A GROUND RESISTANCE OF LESS THAN 5 OHMS.

5. RECORD GROUND RESISTANCE TEST RESULTS ON [redacted] "GROUND RESISTANCE TEST" FORM. DELIVERABLE TO GENERAL DYNAMICS.

6. TEST SHALL BE WITNESSED BY [redacted] REPRESENTATIVES. IF POSSIBLE WITHOUT DELAYING THE PROJECT SCHEDULE.

7. COPIES OF THE TEST RESULTS SHALL BE SUBMITTED TO [redacted] REPRESENTATIVES AND ENGINEER.

8. WHEN USING OR CONNECTING TO AN EXISTING GROUND RING – TEST GROUND RING PRIOR TO AND AFTER CONNECTION TO THE EXISTING GROUND RING.

LA-RICS
Los Angeles Regional Interoperable Communications System

[redacted]

GROUNDING
GENERAL NOTES
G1

NOTE: ALL INFORMATION IS SUBJECT TO FIELD VERIFICATION. ALL INFORMATION IS CONFIDENTIAL AND NOT FOR PUBLIC DISTRIBUTION WITHOUT EXPRESS CONSENT OF THE LOS ANGELES REGIONAL INTEROPERABLE COMMUNICATIONS SYSTEMS AUTHORITY.

Underground Service Alert

Call: TOLL FREE
1-800
422-4133
TWO WORKING DAYS BEFORE YOU DIG

NOTIFY DIG-ALERT OR PRIVATE LOCATING COMPANY PRIOR TO ANY EXCAVATING OR TRENCHING

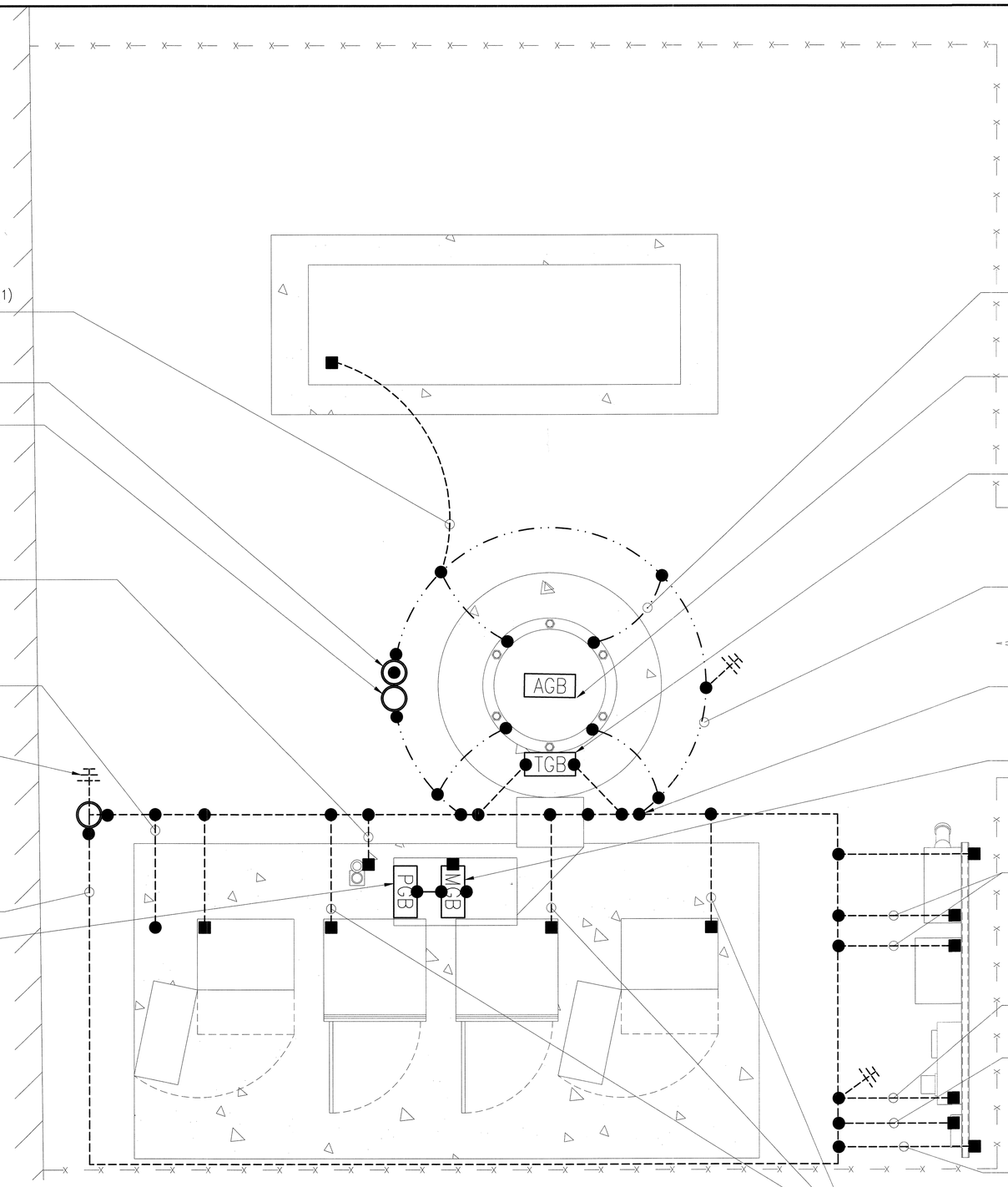

BOND GENERATOR GROUND LUG TO GROUND RING WITH (1) 1#2 SOLID TINNED COPPER GROUND AND 2 HOLE LUGS

NEW XIT 03/G3

NEW INSPECTION WELL

BOND GPS MAST TO THE GROUND RING USING 1#2 SOLID TINNED GROUND, PROTECT IN 1/2" PVC SCH 80 CONDUIT AND SEAL BOTH ENDS WITH SILICON

BOND 1#2 AWG TINNED COPPER WIRE FROM REBAR TO GROUND RING (GROUND WIRE TO BE IN PVC CONDUIT SLEEVE INTO CONCRETE) 02/G4

COPPERCLAD STEEL GROUND ROD DRIVEN FULL LENGTH INTO GROUND (TYP.)

NEW 1#2 SOLID TINNED COPPER GROUND WIRE, 24" AWAY FROM CONCRETE PAD. MIN. 30" BELOW GRADE (OR FROST LINE, WHICHEVER IS GREATER)

POLYPHASERS GROUND BAR INSIDE CABLE TRAY

BOND MONOPOLE TO GROUND RING WITH (1) #2/0 SOLID TINNED COPPER GROUND (TYP. 4 LOCATIONS, EVENLY SPACED)

NEW ANTENNA GROUND BARS WITH NO STANDOFF INSULATORS, BOND COAX GROUND KIT DOWNLEADS TO THE GROUNDING BAR MOUNTED AT EACH ANTENNA SECTOR

MOUNT TGB ON LOWER PORTION OF MONOPOLE AT COAX TRAY. MOUNT TGB DIRECTLY TO MONOPOLE WITH NO STANDOFF INSULATORS. EXOTHERMIC WELD TGB TO GROUND RING WITH 2#2 SOLID TINNED COPPER WIRE INSTALL COAX GROUND KITS AND BOND TO TGB.

#2/0 STRANDED TINNED GROUND RING AROUND MONOPOLE, MIN. 30" BELOW GRADE (OR FROST LINE, WHICHEVER IS GREATER)

MONOPOLE GROUND RING AND EQUIPMENT GROUND RING SHALL BE BONDED TOGETHER IN (2) LOCATIONS USING #2 SOLID TINNED COPPER GROUND.

MASTER GROUND BAR INSIDE CABLE TRAY. GROUND BAR EXOTHERMICALLY CONNECTED TO GROUND RING

BOND ATS & ELECTRICAL PANEL ON H-FRAME TO GROUND RING. USE 2-HOLE LUGS AND SOLID TINNED #2 COPPER GROUND. PROTECT DOWNLEADS IN 1/2" PVC SCH 80 CONDUIT AND SEAL BOTH ENDS

BOND MAIN ELECTRICAL SERVICE GROUND TO GROUND RING WITH #2 SOLID TINNED GROUND

BOND ALARM PANEL ON H-FRAME TO GROUND RING. USE 2-HOLE LUGS AND SOLID TINNED #2 COPPER GROUND. PROTECT DOWNLEADS IN 1/2" PVC SCH 80 CONDUIT AND SEAL BOTH ENDS

BOND H-FRAME POST TO GROUND RING WITH 1#2 SOLID TINNED COPPER GROUND

BOND EACH OUT-DOOR EQUIPMENT CABINET MECHANICALLY TO GROUND RING WITH 1#2 SOLID TINNED COPPER GROUND. PROTECT DOWNLEADS IN 1/2" PVC SCH 80 CONDUIT AND SEAL BOTH ENDS

LEGEND

- EXOTHERMIC WELD
- MECHANICAL CONNECTION
- XIT
- INSPECTION WELL
- GROUND ROD
- #2 TINNED SOLID BARE COPPER GROUND WIRE
- #2/0 STRANDED TINNED GROUND WIRE

12°18'
MAGNETIC NORTH

01 **EXTERIOR GROUNDING PLAN**
SCALE: 3/4"=1'-0"

16" 0 8" 16"
SCALE: 3/4"= 1'-0"

NOTE: ALL INFORMATION IS SUBJECT TO FIELD VERIFICATION. ALL INFORMATION IS CONFIDENTIAL AND NOT FOR PUBLIC DISTRIBUTION WITHOUT EXPRESS CONSENT OF THE LOS ANGELES REGIONAL INTEROPERABLE COMMUNICATIONS SYSTEMS AUTHORITY.

LA-RICS
Los Angeles Regional Interoperable Communications System

[redacted]

EXTERIOR
GROUNDING PLAN
G2

NOTE: ALL INFORMATION IS SUBJECT TO FIELD VERIFICATION. ALL INFORMATION IS CONFIDENTIAL AND NOT FOR PUBLIC DISTRIBUTION WITHOUT EXPRESS CONSENT OF THE LOS ANGELES REGIONAL INTEROPERABLE COMMUNICATIONS SYSTEMS AUTHORITY.

LA-RICS
Los Angeles Regional Interoperable Communications System

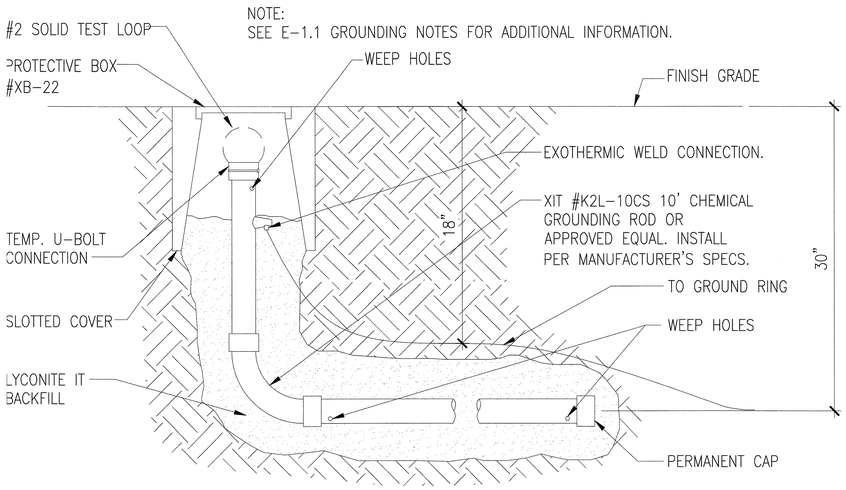

03 XIT DETAIL
SCALE: NTS

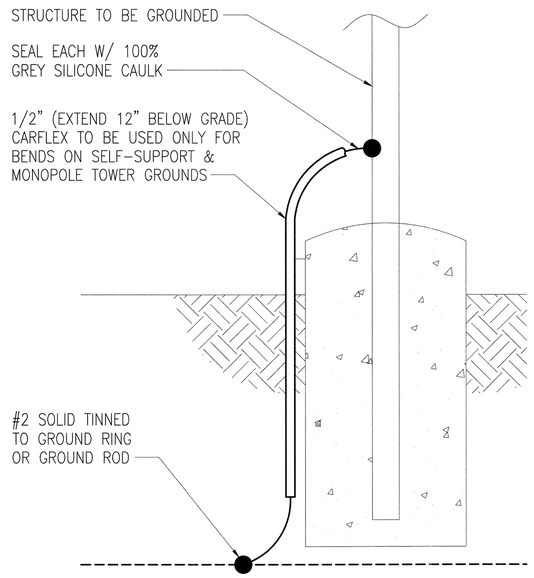

NOTE: CONDUIT SHALL BE PROPERLY CAPPED AND SEALED AT ENDS

02 GROUND WIRE PROTECTION
SCALE: NTS

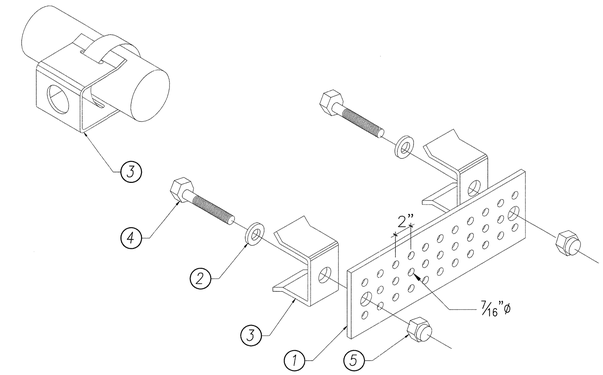

1. TINNED COPPER GROUND BAR PLATE, 1/4"x4"x12". HOLE CENTERS TO MATCH NEMA DOUBLE LUG CONFIGURATION. APPLY ANTI-OXIDATION COMPOUND.
2. 5/8" LOCK WASHERS
3. STANDOFF ADAPTER
4. CONNECTION BOLT
5. LOCK NUT (OR NUT WITH FLAT & LOCK WASHERS)

01 GROUND BAR W/O INSULATORS
SCALE: NTS

NOTES:
1. CONTRACTOR TO APPLY ANTI-OXIDATION COMPOUND.
2. GROUND BAR SHALL BE SIZED TO ACCOMMODATE ALL GROUNDING CONNECTION REQUIRED.
3. CLEAN ATTACHMENT POINTS TO REMOVE PAINT.
4. ALL GROUND BARS TO BE TINNED

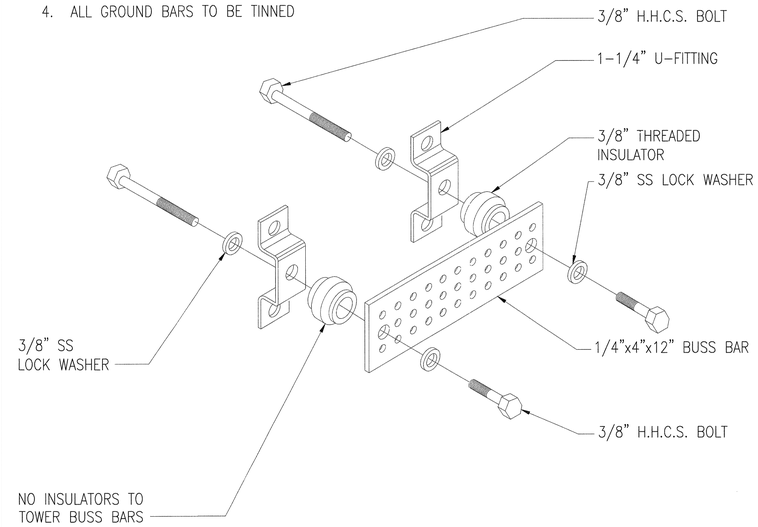

04 GROUND BAR WITH INSULATORS
SCALE: NTS

GROUNDING DETAILS
G3

NOTE: ALL INFORMATION IS SUBJECT TO FIELD VERIFICATION. ALL INFORMATION IS CONFIDENTIAL AND NOT FOR PUBLIC DISTRIBUTION WITHOUT EXPRESS CONSENT OF THE LOS ANGELES REGIONAL INTEROPERABLE COMMUNICATIONS SYSTEMS AUTHORITY.

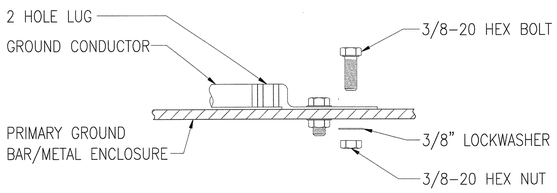

INSTALLATION NOTES:

1. SELECT BOLT LENGTH TO PROVIDE A MINIMUM OF TWO EXPOSED THREADS
2. BURNISH MOUNTING SURFACE TO REMOVE PAINT IN THE AREA OF LUG CONTACT
3. APPLY ANTI-OXIDANT OMFOUND TO MATING SURFACE OF LUG AND WIRE CLEAN EXCESS COMPOUND
4. USE SOLID COPPER WIRE AND MECHANICAL 2-HOLE LUG WITH STAINLESS STEEL HARDWARE FOR ALL EXTERIOR GROUNDING

Universal Two-Hole Lugs with Sight Holes — A valmont COMPANY

Features: Longer barrel lengths than many other brands. Chamfered ends allow easy wire insertion. Color coded.

Construction: Tin plated copper.

Design Criteria: Universal hole design allows 0.75" - 1" spacing. UL listed with inspection windows.

Part #	Gauge	Stud Size	Hole Spacing	Color	Barrel Length	Weight
HLU6	6	3/8"	0.75" - 1"	Blue	Long	0.05 lb.
HLU2S	2 Solid	3/8"	0.75" - 1"	White	Long	0.05 lb.
HLU2	2	3/8"	0.75" - 1"	Brown	Long	0.05 lb.

04 GND CONN. DETAIL
SCALE: NTS

FIRST LAYER: 3M 33+ BLACK TAPE #054007-06132 (OR APPROVED EQUAL). THIS LAYER OF TAPE IS WRAPPED STARTING FROM THE MIDDLE OF THE CONNECTORS OUTWARD TO ONE END GOING 1.5"-2.0" BEYOND THE CONNECTOR, THEN BACK TO THE OPPOSITE END AGAIN GOING 1.5" - 2.0" BEYOND THE CONNECTOR, AND THEN BACK TO THE MIDDLE IN ONE CONTINUOUS WRAP, OVERLAPPING EACH WRAP BY 1/4". BEFORE CUTTING THE TAPE, OVERLAP SEVERAL WRAPS AT THE MIDDLE OF THE CONNECTOR. THIS TAPE SHOULD BE WRAPPED IN THE OPPOSITE DIRECTION OF HOW THE CONNECTOR IS TIGHTENED.

SECOND LAYER: DECIBEL PRODUCTS VAPOR WRAP #DB11316 (OR APPROVED EQUAL). THIS LAYER OF BUTYL TAPE IS WRAPPED AROUND THE FIRST LAYER OF BLACK TAPE. REPEAT THE TAPING PROCESS FOR THE FIRST LAYER USING VAPOR WRAP AND OVERLAP EACH END OF THE PREVIOUS LAYER OF BLACK TAPE BY 1." USE AT MINIMUM OF 2" OF VAPOR WRAP TO COVER METAL GROUND LEAD NEAR CLAMP LOCATIONS.

THIRD LAYER: 3M 33+ BLACK TAPE #054007-06132 (OR APPROVED EQUAL). THIS LAYER OF TAPE IS WRAPPED AROUND THE SECOND LAYER OF VAPOR WRAP. REPEAT THE TAPING PROCESS FOR THE FIRST LAYER USING BLACK TAPE AND OVERLAP EACH END OF THE PREVIOUS LAYER OF VAPOR WRAP BY 1."

05 COAX CABLE GROUNDING WEATHERPROOFING
SCALE: NTS

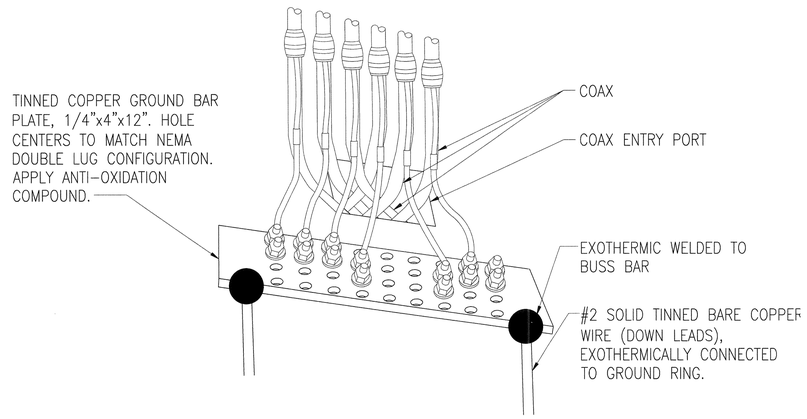

NOTE:

1. GROUND BAR TO BE INSTALLED WITHIN 30" ABOVE THE TOP OF THE ICE BRIDGE.
2. ANTENNA GROUND BAR W/ INSULATORS MECHANICALLY CLAMPED TO TOWER STEEL WITH STAINLESS STEEL HARDWARE. CHEMICALLY REMOVE PAINT AND APPLY ANTI-OXIDATION COMPOUND PRIOR TO CLAMPING TO TOWER.
3. TORQUE HARDWARE TO 12 FT.-LBS.

03 LOWER MONOPOLE COAX GROUND BAR DETAIL
SCALE: NTS

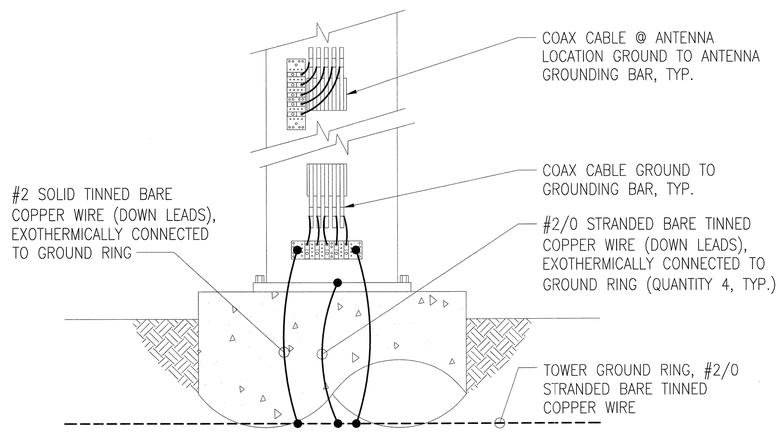

06 MONOPOLE GROUNDING DETAIL
SCALE: NTS

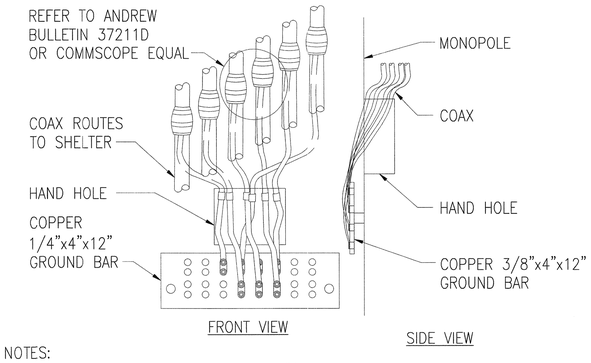

NOTES:

1. GROUND BARS REQUIRED EVERY 100 FT. MAXIMUM.
2. ANTENNA GROUND BAR SHALL BE MECHANICALLY CLAMPED DIRECTLY TO THE MONOPOLE STEEL WITH STAINLESS STEEL HARDWARE. CHEMICALLY REMOVE PAINT AND APPLY ANTI-OXIDATION COMPOUND OR APPROVED EQUAL PRIOR CLAMPING TO INSIDE OF MONOPOLE TOWER.
3. TORQUE HARDWARE TO 12 FT-LBS

01 TYP. COAX GROUND BAR DETAIL
SCALE: NTS

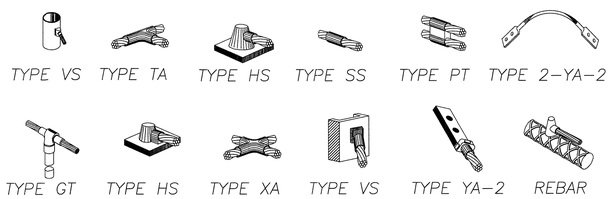

02 EXOTHERMIC WELD
SCALE: NTS

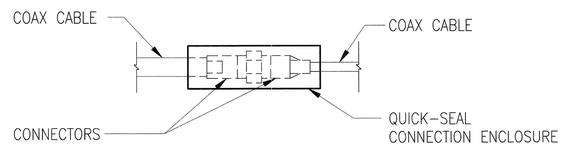

VALMONT WEATHERPROOFING QUICK-SEAL CONNECTION ENCLOSURES	
PART #	APPLICATION
D32473	7/8" TO 1/2" CONNECTION
C79091	1-1/4" TO 1/2" CONNECTION
E97072	1-5/8" TO 1/2" CONNECTION
D80635	1/2" TO ANTENNA (LONG 6")

07 WEATHER PROOFING CONNECTION
SCALE: NTS

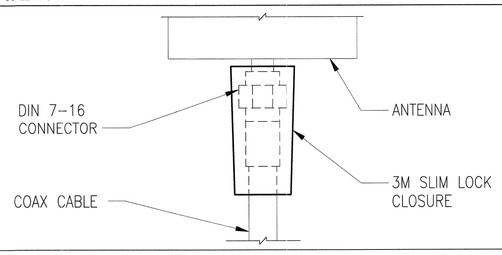

VALMONT WEATHERPROOFING 3M SLIM LOCK CLOSURE	
PART #	APPLICATION
SLC-716	WEATHERPROOF DIN 7-16 & 1/2" COAX CONNECTION

08 WEATHER PROOFING CONNECTION AT ANTENNA
SCALE: NTS

LA-RICS
Los Angeles Regional Interoperable Communications System

EQUIPMENT GROUNDING SYSTEM

G4

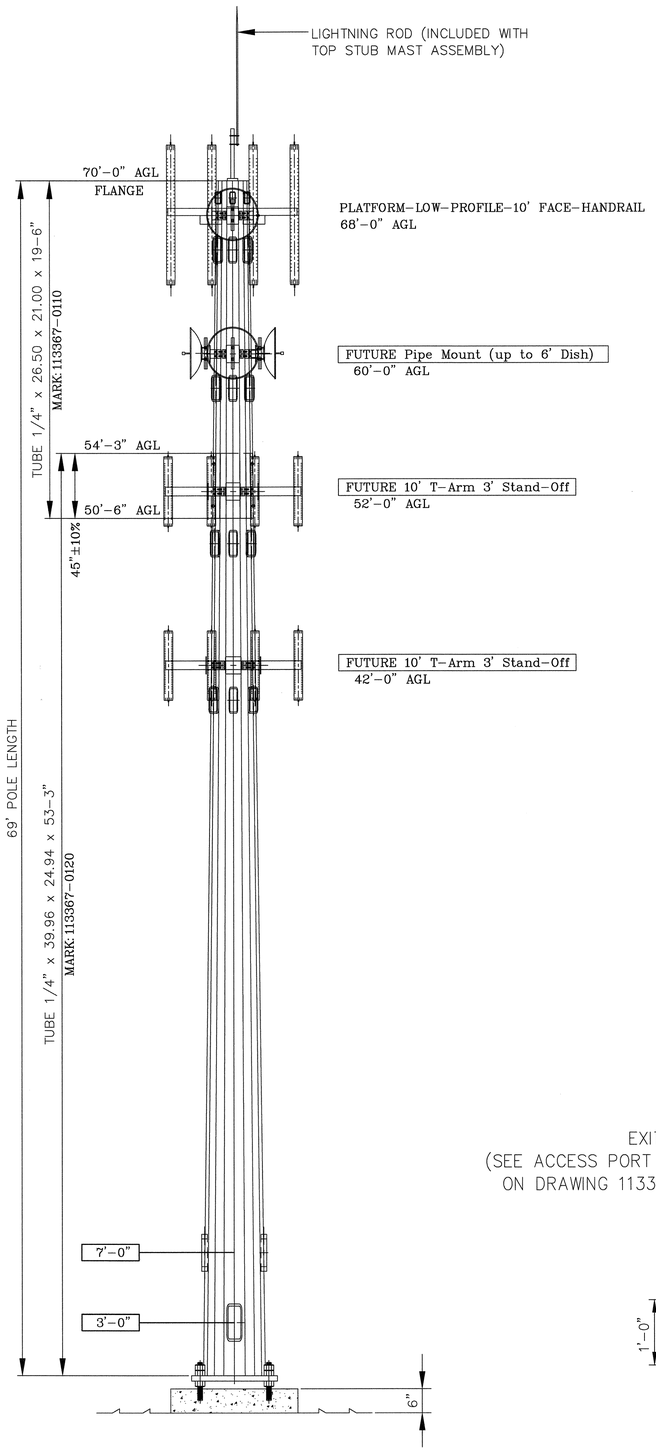

POLE ELEVATION

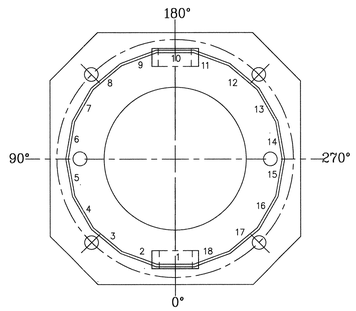

ACCESS PORT @ 3'-0"

ORIENT POLE IN THE FIELD TO SUIT

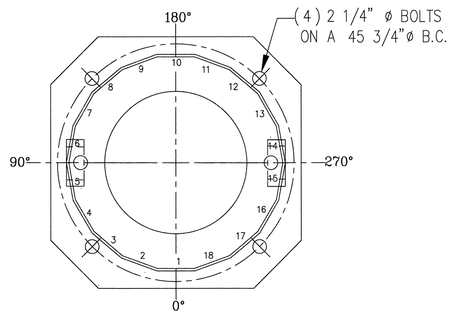

ACCESS PORT @ 7'-0"

ORIENT POLE IN THE FIELD TO SUIT

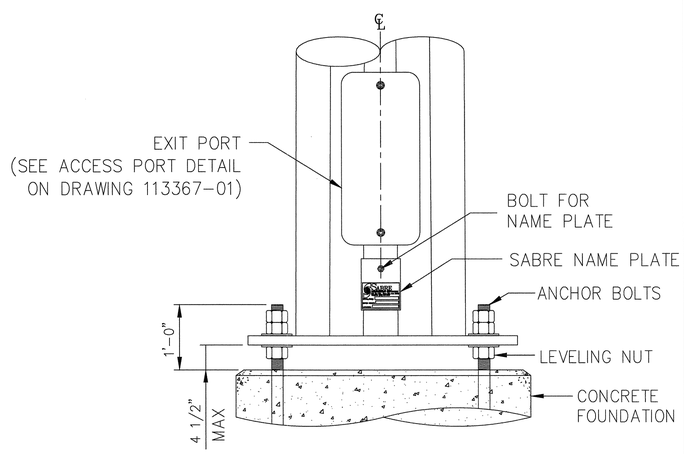

BASE INSTALLATION

NOTICE: ALL PARTS ARE TO BE INVENTORIED AND ANY SHORTAGES REPORTED WITHIN 48 HOURS OF DELIVERY. SHORTAGES REPORTED AFTER THIS TIME PERIOD WILL BE CHARGED TO THE CONTRACTOR. CALL 800/369-6690 ASK FOR THE CONTRACTS DEPARTMENT

SPECIAL INSTRUCTIONS

BASED ON CHAPTER 17 OF THE 2013 CALIFORNIA BUILDING CODE, THE FOLLOWING SPECIAL INSTRUCTIONS ARE REQUIRED, FOR THE MONOPOLE AND FOUNDATION:

- FIELD SPECIAL INSPECTORS MUST BE L.A. COUNTY CERTIFIED
- INSPECT REINFORCING STEEL AND PLACEMENT (PERIODIC)
- INSPECT BOLTS TO BE INSTALLED IN CONCRETE, PRIOR TO AND DURING PLACEMENT OF CONCRETE (CONTINUOUS)
- VERIFY USE OF REQUIRED DESIGN MIX (PERIODIC)
- AT THE TIME FRESH CONCRETE IS SAMPLED TO FABRICATE SPECIMENS FOR STRENGTH TESTS – MINIMUM 4000 PSI, PERFORM SLUMP AND AIR CONTENT TESTS, AND DETERMINE THE TEMPERATURE OF THE CONCRETE (CONTINUOUS)
- INSPECT CONCRETE PLACEMENT FOR PROPER APPLICATION TECHNIQUES (CONTINUOUS)
- INSPECT FOR MAINTENANCE OF SPECIFIED CURING TEMPERATURE AND TECHNIQUES (CONTINUOUS)
- OBSERVE DRILLING OPERATIONS AND MAINTAIN COMPLETE AND ACCURATE RECORDS (CONTINUOUS)
- VERIFY PLACEMENT LOCATION AND PLUMBNESS, CONFIRM ELEMENT DIAMETER AND LENGTH. RECORD CONCRETE VOLUME (CONTINUOUS)
- INSPECT HIGH-STRENGTH BOLTING (PERIODIC) ALL STRUCTURAL BOLTS MAY BE TIGHTENED TO SNUG-TIGHT CONDITION, AS DEFINED BY AISC.

SABRE IS A CITY OF LOS ANGELES APPROVED FABRICATOR #1795. THEREFORE, SPECIAL INSPECTIONS OF THE FABRICATION ARE NOT REQUIRED.

[redacted]

DRAWING LIST

MONOPOLE ERECTION	113367-MM
MONOPOLE FOUNDATION(S)	113367-F1
MONOPOLE FABRICATION	113367-01
MOUNTS: TRI-COLLAR	C10112300
10' LP PLATFORM WITH HANDRAIL	9031395 C10116812
MONOPOLE TOP STUB MAST ASSEMBLY	C10503219
BILL OF MATERIALS	BOM-1

POLE DESIGN INFORMATION

THE MONOPOLE WAS DESIGNED FOR A BASIC WIND SPEED OF 100 MPH WITH 0" OF RADIAL ICE, IN ACCORDANCE WITH ANSI/TIA-222-G-2 (2009), STRUCTURE CLASS III, EXPOSURE CATEGORY C, TOPOGRAPHIC CATEGORY 1.

THE TOWER MEETS THE REQUIREMENTS FOR AN ULTIMATE WIND SPEED OF 115 MPH (RISK CATEGORY IV), IN ACCORDANCE WITH THE 2013 CALIFORNIA BUILDING CODE.

THE USE OF ROLLED STEEL SECTIONS AND/OR BOLTS MANUFACTURED OUTSIDE THE UNITED STATES WILL REQUIRE VERIFICATION THAT THE PRODUCTS COMPLY WITH APPLICABLE ASTM STANDARDS. MILL CERTIFICATES WILL BE REQUIRED FOR ALL STEEL. STEEL GRADES OTHER THAN ASTM-A36 WILL REQUIRE TESTING BY AN APPROVED LABORATORY. ALL FOREIGN BOLTS MUST BE APPROVED BY COUNTY OF LOS ANGELES BUILDING AND SAFETY PRIOR TO THEIR USE.

BOLT INSTALLATION DETAILS

1. INSTALLATION OF BOLTS: BOLTS FOR TOWERS AND ANTENNAS SHALL BE INSTALLED WITH THE NUTS FACING TO THE OUTSIDE AND/OR TO THE TOP OF THE TOWER, UNLESS PROHIBITED BY LACK OF CLEARANCE.
2. TIGHTENING OF BOLTS: ALL HIGH STRENGTH BOLTS SHALL BE TIGHTENED TO A SNUG-TIGHT CONDITION, AS DEFINED BY AISC.
3. NUT LOCKING DEVICE: ALL NUTS SHALL BE EQUIPPED WITH SOME TYPE OF NUT LOCKING DEVICE. SEE THE INDIVIDUAL DRAWINGS FOR THE TYPE OF NUT LOCKING DEVICE TO BE USED FOR EACH INDIVIDUAL APPLICATION.

UNLESS OTHERWISE SPECIFIED ALL DIMENSIONS INCLUDE FINISHES AND ARE IN INCHES

TOLERANCES: FRACTIONS ± 1/16" ANGLES ± 1/2 DEG. DECIMALS ± .010"

MATERIAL: TOLERANCES DO NOT APPLY TO RAW MATERIAL

[redacted]

Rev	DATE	DRW	CHK	DESCRIPTION

CONFIDENTIAL
This Document and the information contained herein is the confidential trade secret property of Sabre Communication Corporation ("Sabre") and must not be reproduced, copied or used, in whole or in part, for any purpose without the prior written consent of Sabre. ©2014 Sabre Communications Corporation. All rights reserved.

[redacted]

JOB	[redacted]	SIZE D	DRAWING NO [redacted]	REV 0
DATE				
DRAWN BY		[redacted]	SCALE N.T.S.	PAGE 1 OF 1
CHECKED				

*45° SPACING FROM CENTERLINE OF PIER TO THE CENTERLINE OF BOLT CLUSTER.

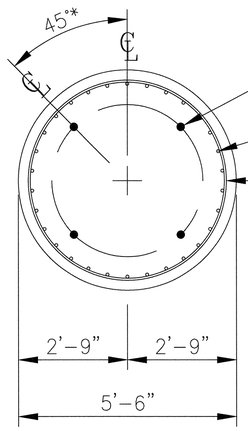

(4) – ANCHOR BOLTS 2 1/4"ø X 7'-0" (#18J A615 GR. 75 OR EQUAL) ON A 45.75"ø B.C.

(30) #7 VERTICAL REBAR EVENLY SPACED

(28) #5 HORIZONTAL TIES @ 10" C/C WITH TWO (2) WITHIN TOP 5" OF CONCRETE

PLAN VIEW

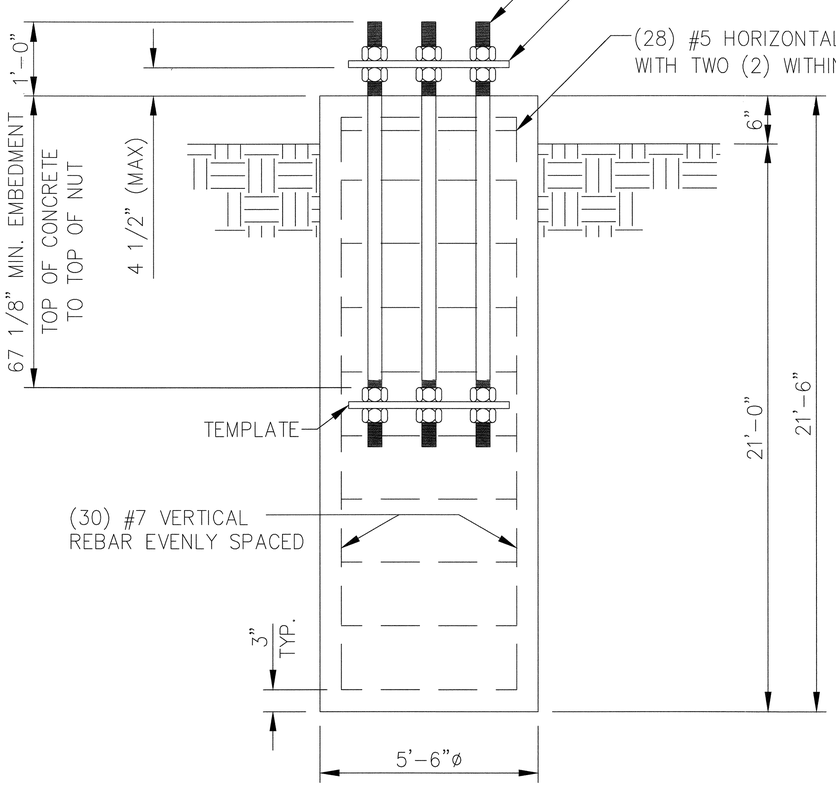

(4) – ANCHOR BOLTS 2 1/4"ø X 7'-0" (#18J A615 GR. 75 OR EQUAL) W/(5) GALV. HHN & (2) GALV. FW. EACH AT TOP

TEMPLATE

(28) #5 HORIZONTAL TIES @ 10" C/C WITH TWO (2) WITHIN TOP 5" OF CONCRETE

(30) #7 VERTICAL REBAR EVENLY SPACED

ELEVATION VIEW

REINFORCING STEEL SCHEDULE							
LOCATION	NO REQ'D.	BAR SPC'G.	SIZE	CUT LGTH.	TOTAL LGTH.	TOTAL WT.	SHAPE
PIER VERTICAL REINFORCING	30	NOTED ON DWG.	#7	21'-0"	630'-0"	1288 LBS.	STRAIGHT
PIER TIES	28	NOTED ON DWG.	#5	17'-2"	480'-8"	501 LBS.	5'-0" O.D.
					TOTAL REBAR WT.	1789 LBS.	

TOP & BOTTOM TEMPLATES
PART NO.: 113367-9001

PIER TIES TO HAVE 5 3/4" HOOK AS SHOWN

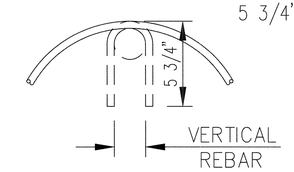

PIER TIE HOOK DETAIL

GENERAL NOTES:

1. ALL VERTICAL REINFORCING BARS ARE TO BE SECURELY TIED BEFORE CONCRETE IS PLACED.
2. THE GROUND ELEVATION SHALL BE A MAXIMUM OF 6" BELOW THE TOP OF THE PIER.
3. ALL EXPOSED CONCRETE CORNERS ARE TO BE CHAMFERED 3/4 INCH.
4. ALL REINFORCING STEEL SHALL CONFORM TO ASTM A615 GRADE 60 DEFORMED BARS.
5. CONCRETE SHALL HAVE A MINIMUM 28 DAY COMPRESSIVE STRENGTH OF 4000 PSI, IN ACCORDANCE WITH ACI 318-11.
6. REINFORCING STEEL TO HAVE A 3" MINIMUM CONCRETE COVER.
7. FOUNDATION DESIGN IS BASED ON THE GEOTECHNICAL REPORT BY AESCO, PROJECT NO. 20141705-D1604, DATED NOVEMBER 24, 2014.
8. ANCHOR BOLTS 2 1/4" X 7'-0" #18J A615 GR. 75 OR EQUAL ON A 45.75"ø BOLT CIRCLE (4 REQ'D).
9. CONCRETE REQUIRED 18.92 CUBIC YARDS.
10. SEE THE GEOTECHNICAL REPORT FOR DRILLED PIER INSTALLATION REQUIREMENTS, IF SPECIFIED.
11. THE FOUNDATION IS BASED ON THE FOLLOWING FACTORED LOADS:
    MOMENT (KIP-FT) = 922.5
    AXIAL (KIPS) = 16.6
    SHEAR (KIPS) = 18.34

[redacted]

UNLESS OTHERWISE SPECIFIED ALL DIMENSIONS INCLUDE FINISHES AND ARE IN INCHES

TOLERANCES: FRACTIONS ± 1/16"
ANGLES ± 1/2 DEG.
DECIMALS ± .010"

MATERIAL:

TOLERANCES DO NOT APPLY TO RAW MATERIAL

REV	DATE	DRW	CHK	DESCRIPTION

[redacted]

CONFIDENTIAL
This document and the information contained herein is the confidential trade secret property of Sabre Communications Corporation ("Sabre") and must not be reproduced, copied or used, in whole or in part, for any purpose without the prior written consent of Sabre.
© 2014 Sabre Communications Corporation. All rights reserved.

[redacted]

JOB NO. [redacted]	SIZE	DRAWING NO.	REV
DATE [redacted]	D	[redacted]	0
DRAWN BY		SCALE	PAGE
CHECKED BY		None	1 OF 1

(ft'-in") = BOTTOM OF SECTION TO STAND OFF BRACKET

(ft'-in") = C-LINE OF BUSS BAR LUG

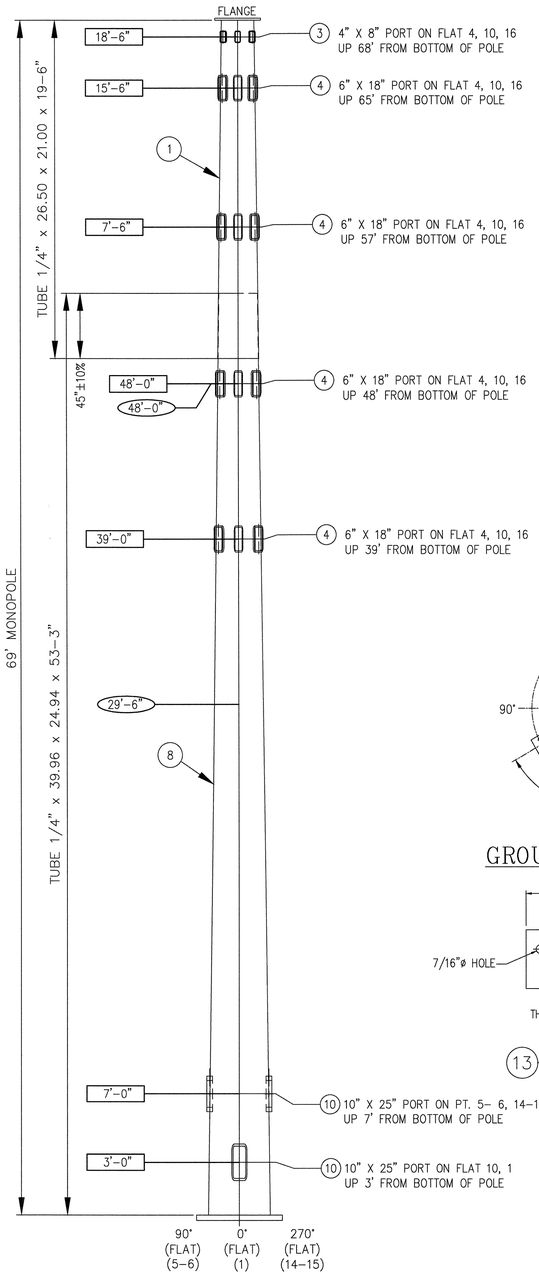

POLE ELEVATION

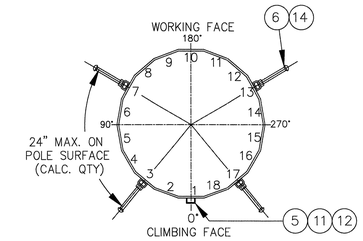

- CLIMBING SYSTEM IS CENTERED ON FACE 1 STARTING AT 15" BELOW TOP TO 10'-0" FROM BASE WITH 15" ALTERNATE SPACING.
- WORKING STEP CLIPS ARE PLACED AT THE NEAREST CLIMBING STEP LEVEL DOWN 72" FROM THE APPURTENANCE CENTER LINE SPACED ON THE CIRCUMFERENCE AT A DISTANCE NOT TO EXCEED 24" ON CENTER.
- SAFETY CLIMB SYSTEM IS CENTERED ON FACE 1.
- TOP STAND OFF BRACKET IS 12" FROM THE TOP.
- INTERMEDIATE STAND OFF BRACKETS ARE SPACED AT 27' MAX.
- BOTTOM STAND OFF BRACKET IS 10'-0" FROM THE BASE.

CLIMBING AND SAFETY DETAILS

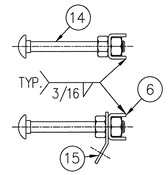

STEP BOLTS CLIP & TIE-OFF

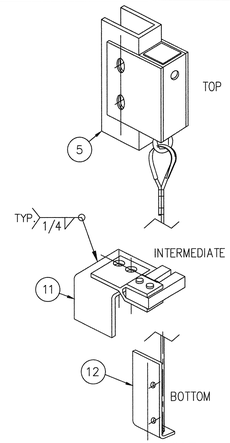

SAFETY CABLE

SAFETY CLIMB NOTE:
BOTTOM SAFETY CLIMB BRACKET MUST HAVE DOUBLE HOLES AWAY FROM THE POLE FOR USE WITH SAFETY CLIMB KIT PROVIDED.

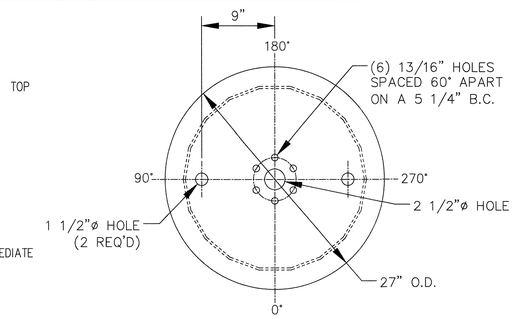

2 FLANGE PLATE DETAIL

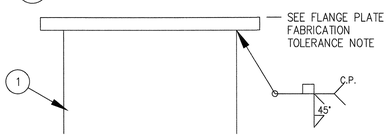

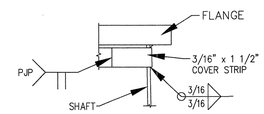

GALVANIZED FLANGE PLATE WELD DETAIL

FLANGE PLATE FABRICATION TOLERANCE NOTE

FLANGE PLATES ARE TO BE WELDED PERPENDICULAR TO THE AXIS OF THE POLE TO WITHIN (+) OR (-) 1/8 DEGREE

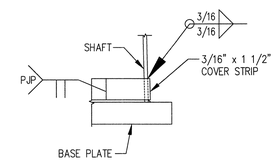

GALVANIZED BASE PLATE WELD DETAIL

NOTE: THE COVER STRIP IS USED BY SABRE INDUSTRIES TO MINIMIZE THE OCCURRENCES OF DELAYED (TOE) CRACKING.

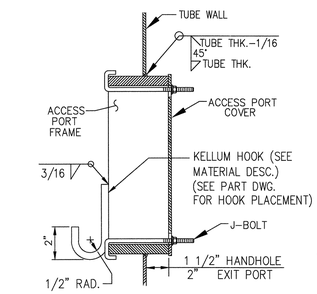

ACCESS PORT DETAIL

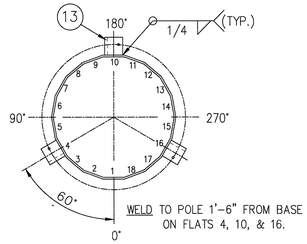

GROUND LUG ANGLE WELD

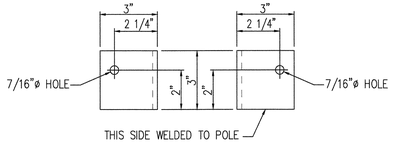

13 MARK: MWS00004

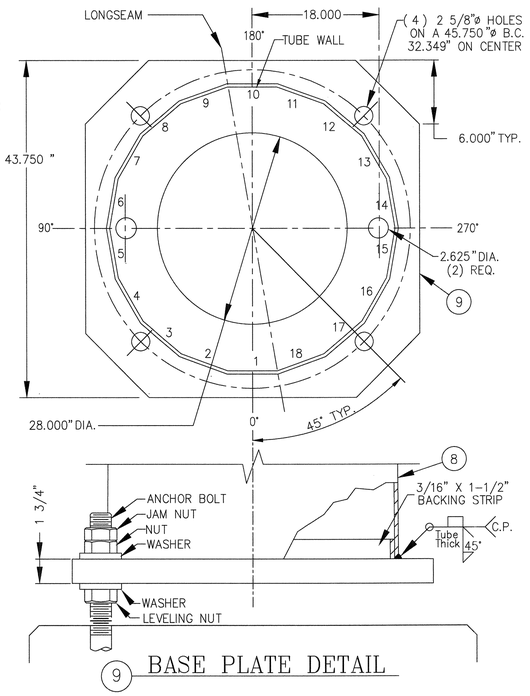

9 BASE PLATE DETAIL

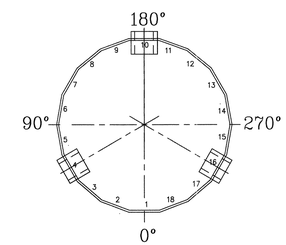

HAND HOLES
TYPICAL ORIENTATION

NOTE:
REFER TO DRAWING 9029280 FOR MONOPOLE LONGSEAM WELD DETAILS.

18-SIDED POLE		BILL OF MATERIAL		TAPER= .2820 IN/FT	
ITEM	QTY	MARK NO.	DESCRIPTION	MATERIAL	WEIGHT
1	1	113367-0110	TUBE 1/4" x 26.50 x 21.00 x 19-6"	A572-65	1237
2	1	113367-5003	TOP FLANGE PLATE 1 1/2" X 27" O.D.	A-36	240
3	3	C30138120	Access Port (4" x 8" x 3-1/2" x 1/2") with 2 kellum hooks	A-500-C	35
4	6	C30138127	Access Port (6" x 18" x 4" x 5/8") with 2 kellum hooks	A-500-C	205
5	1	MWS00001	TOP STAND OFF SAFETY BRACKET	A-36	1
6	23	TWS00081	STEP BOLT CLIP	A-36	7
7	4	C40999001	1"-8 HEAVY HEX JACKING NUT (BLACK)	A-563	1
				ASSEMBLY WEIGHT:	1726
8	1	113367-0120	TUBE 1/4" x 39.96 x 24.94 x 53-3"	A572-65	4629
9	1	113367-5001	BASE PLATE 1 3/4" x 43.75" SQ.	A572-50	592
4	6	C30138127	Access Port (6" x 18" x 4" x 5/8") with 2 kellum hooks	A-500-C	205
10	4	C30138005	Access Port (10-1/2" x 25-1/2" x 4" x 3/4") without hooks	A-572-65	239
11	2	MWS00002	MIDDLE STAND OFF SAFETY BRACKET	A-36	2
12	1	MWS00003	BOTTOM STAND OFF SAFETY BRACKET	A-36	1
6	41	TWS00081	STEP BOLT CLIP	A-36	12
7	4	C40999001	1"-8 HEAVY HEX JACKING NUT (BLACK)	A-563	1
13	3	MWS00004	GROUND LUG ANGLE	A-36	3
				ASSEMBLY WEIGHT:	5684
				STRUCTURE WEIGHT:	7410
SHIP LOOSE MISC.					
14	64	C40044002	5/8"-11 X 7" STEP BOLT (GALV)	A-307	71
15	4	C40011001	STEP BOLT ANCHOR BRACKET	--	1
16	3	C30136015	4.5" X 8.5" X 0.1875PL ACCESS COVER (GALV)	A-36	7
17	12	C30136004	6.5" X 18.5" X 0.1875PL ACCESS COVER (GALV)	A-36	84
18	4	C30136001	11.0" X 26.0" X 0.1875PL ACCESS COVER (GALV)	A-36	60
19	1	C30187404	SAFETY-CLIMB-SYSTEM-SELECT-KIT 100'		47
20	1	C40068001	13OZ CAN OF COLD GALV SPRAY	--	1
21	1	CS00500	NAME PLATE	--	1

ACCESS PORT DATA TABLE						
ITEM	PART NUMBER	WIDTH	HEIGHT	DEPTH	THICK	MATERIAL SPEC
3	C30138120	4"	8"	3 1/2"	1/2"	A-500-C
4	C30138127	6"	18"	4"	5/8"	A-500-C
10	C30138005	10 1/2"	25 1/2"	4"	3/4"	A-572-65

UNLESS OTHERWISE SPECIFIED ALL DIMENSIONS INCLUDE FINISHES AND ARE IN INCHES

TOLERANCES: FRACTIONS ± 1/16" ANGLES ± 1/2 DEG. DECIMALS ± .010"

MATERIAL:

TOLERANCES DO NOT APPLY TO RAW MATERIAL

Rev	DATE	DRW	CHK	DESCRIPTION

[redacted]

CONFIDENTIAL
Information contained herein is the sole property of Sabre Communications Corporation, constitutes a trade secret as defined by Iowa Code Ch. 550 and shall not be reproduced, copied or used in whole or in part for any purpose whatsoever without prior written consent of Sabre Communications Corporation.

[redacted]

JOB	[redacted]	SIZE D	DRAWING NO. [redacted] REV 0
DATE	[redacted]		
DRAWN BY			SCALE N.T.S. / PAGE 1 OF 1
CHECKED BY			

[redacted]

[redacted] TRI-COLLAR ASSEMBLY (10"-40" MONOPOLE)

ITEM	QTY.	PART. NO.	DESCRIPTION	WEIGHT
1.	3	CW00835	WELDMENT, TRI-COLLAR (10"-40" MONOPOLE)	151
2.	6	C40094012	THREADED ROD ASSEMBLY 5/8 X 2'-9"	25
3.	6	C40094002	THREADED ROD ASSEMBLY 5/8 X 1'-6"	17
			TOTAL WEIGHT	193

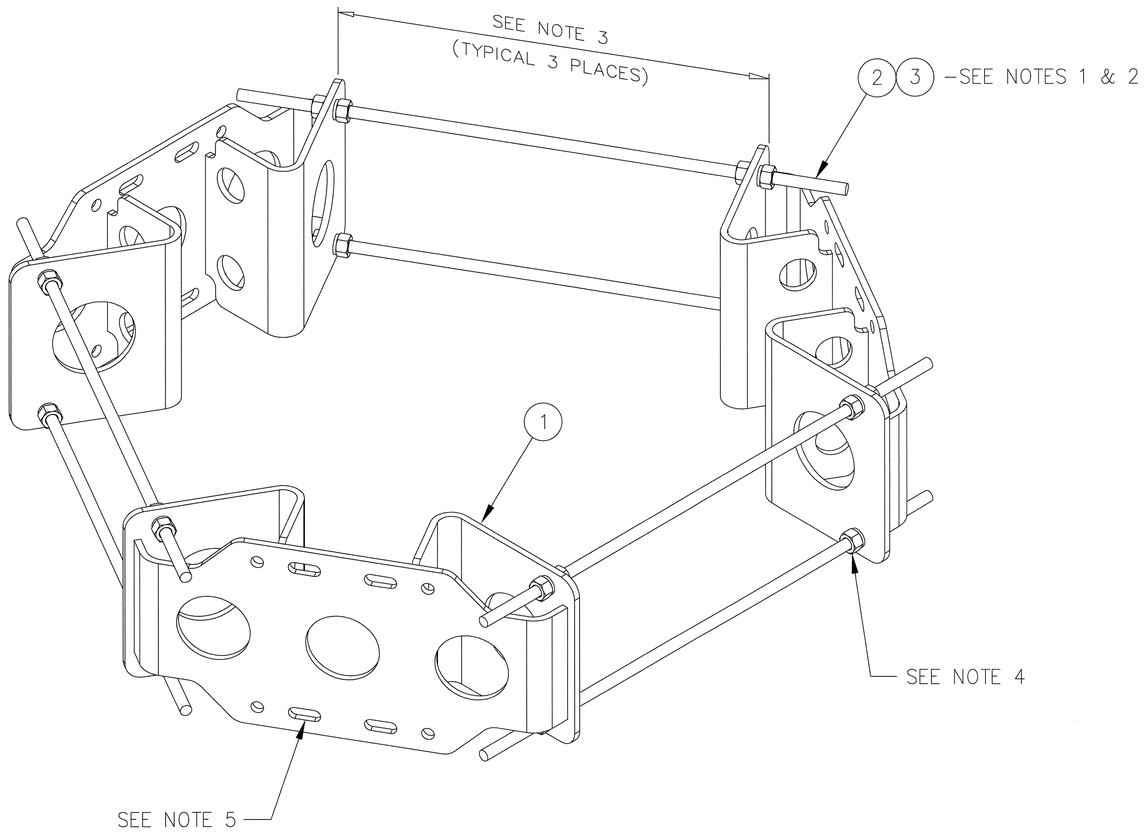

ISOMETRIC VIEW

NOTES:

1. THERE ARE (2) LENGTHS OF THREADED ROD SUPPLIED TO ACCOMMODATE DIAMETERS LISTED BELOW
   USE 5/8 X 1'-6" THREADED ROD ASSEMBLY FOR 10"-24" MONOPOLE DIAMETERS
   USE 5/8 X 2'-9" THREADED ROD ASSEMBLY FOR 24"-40" MONOPOLE DIAMETERS (SEE NOTE 2)
2. THREADED ROD MAY BE SHORTENED IF REQUIRED, FIELD CUT AND COLD GALV SPRAY TO SUIT.
3. THIS DISTANCE MUST BE EQUAL IN ALL (3) THREE LOCATIONS TO ENSURE THE STRUCTURAL INTEGRITY OF THE THREADED RODS AS WELL AS 120° SEPARATION.
4. FOR MONOPOLES 13" DIA. OR SMALLER, ONLY (1) ONE NUT AND (1) ONE LOCKWASHER ARE REQUIRED BETWEEN THE TRI-COLLAR BRACKETS.
   FOR MONOPOLES LARGER THAN 13" DIA., (2) TWO NUTS AND (2) TWO LOCKWASHERS ARE REQUIRED BETWEEN THE TRI-COLLAR BRACKETS.
5. THE MOUNTING SLOTS NOTED WILL ACCOMMODATE 2 3/8"-4 1/2" O.D. MOUNTING PIPES.

UNLESS OTHERWISE SPECIFIED
ALL DIMENSIONS INCLUDE
FINISHES AND ARE IN INCHES

TOLERANCES: FRACTIONS ± 1/16"
ANGLES ± 1/2 DEG.
DECIMALS ± .010"

MATERIAL:

TOLERANCES DO NOT APPLY
TO RAW MATERIAL

[redacted]

REV	DATE	DRW	CHK	DESCRIPTION
[redacted]				

[redacted]

CONFIDENTIAL

This document and the information contained herein is the confidential trade secret property of Sabre Communications Corporation ("Sabre") and must not be reproduced, copied or used, in whole or in part, for any purpose without the prior written consent of Sabre.
© 2014 Sabre Communications Corporation. All rights reserved.

TRI-COLLAR BRACKET ASSEMBLY
FOR MONOPOLES (10"-40" DIA.)
(CIRCUMFERENCE 31.4" TO 125.7")

		SIZE	DRAWING NO.	REV
DATE	[redacted]	D	[redacted]	2
DRAWN BY				
CHECKED BY	[redacted]		SCALE None	PAGE 1 OF 1

[redacted]

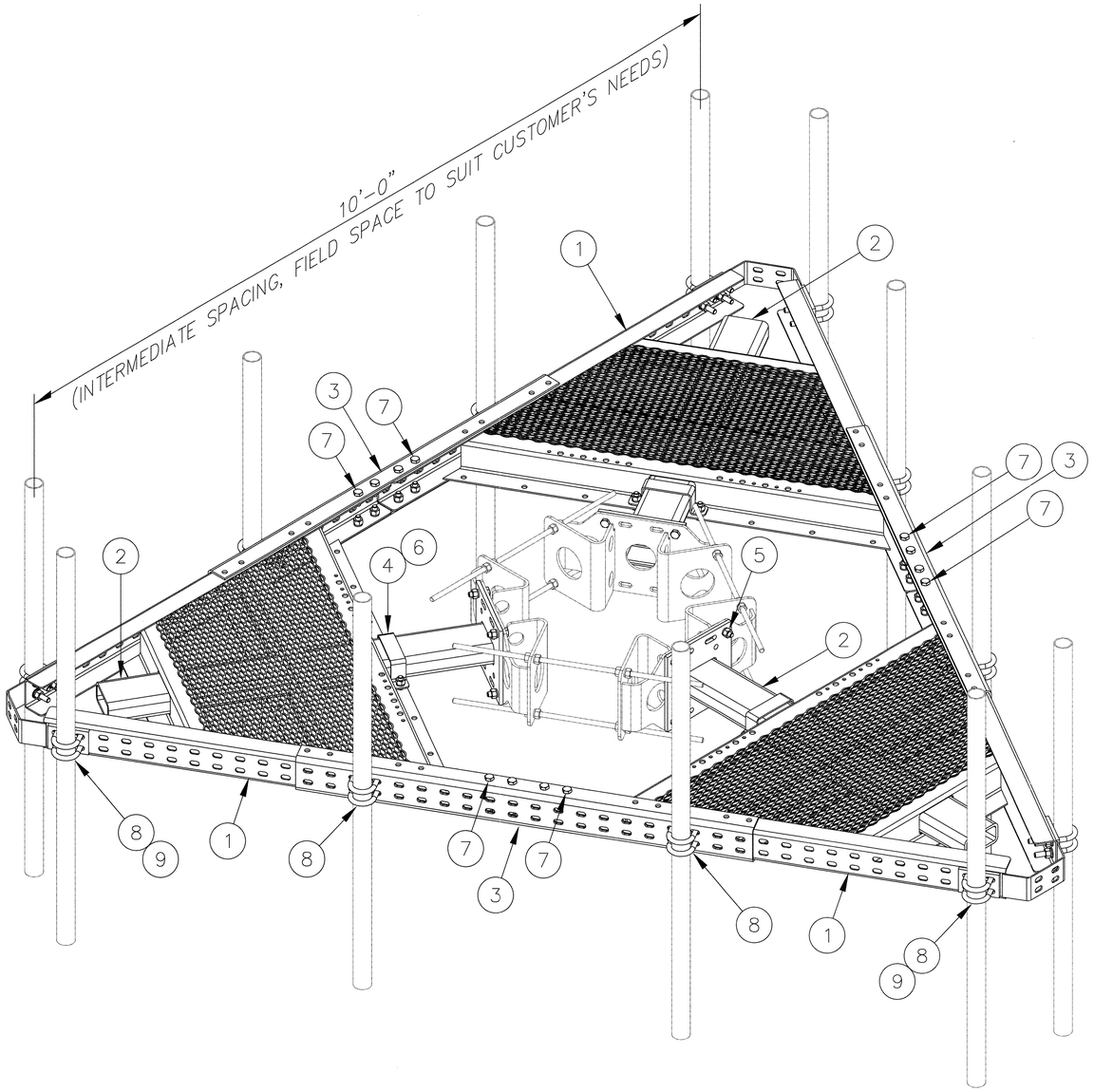

ISOMETRIC VIEW

[redacted] 10' PLATFORM W/MOUNTING PIPE HARDWARE

ITEM	QTY.	PART NO.	DESCRIPTION	WEIGHT
1.	3	CW00885	WELDMENT, CORNER PLATFORM	413
2.	3	CW00886	WELDMENT, PLATFORM ARM	309
3.	3	CS02247	CHANNEL, PLATFORM SPLICE	127
4.	3	CS02248	SADDLE CLAMP, PLATFORM	5
5.	12	C40026024	BOLT ASSEMBLY, 5/8 ø X 2 1/4 A325	6
6.	6	C40026023	BOLT ASSEMBLY, 5/8 ø X 2 A325	3
7.	24	C40026022	BOLT ASSEMBLY, 5/8 ø X 1 3/4 A325	11
8.	24	C40034023	U-BOLT ASSEMBLY, 5/8 ø X 3 1/16 C-C	40
9.	6	CS02317	PLATE, U-BOLT SPACER	14
			TOTAL WEIGHT	928

NOTE:
HARDWARE KIT CK00378 CONSISTS OF ITEMS 4 THRU 9 LISTED ABOVE

UNLESS OTHERWISE SPECIFIED
ALL DIMENSIONS INCLUDE FINISHES AND ARE IN INCHES

TOLERANCES: FRACTIONS ± 1/16"
ANGLES ± 1/2 DEG.
DECIMALS ± .010"

MATERIAL:

TOLERANCES DO NOT APPLY TO RAW MATERIAL

[redacted]

REV	DATE	DRW	CHK	DESCRIPTION

CONFIDENTIAL
This document and the information contained herein is the confidential trade secret property of Sabre Communications Corporation ("Sabre") and must not be reproduced, copied or used, in whole or in part, for any purpose without the prior written consent of Sabre.
© 2014 Sabre Communications Corporation. All rights reserved.

10' LOW PROFILE PLATFORM
W/ANTENNA MOUNTING PIPE HARDWARE

		SIZE	DRAWING NO.	REV
DATE	[redacted]	D	[redacted]	0
DRAWN BY	[redacted]			
CHECKED BY	[redacted]		SCALE None	PAGE 1 OF 1

[redacted]

[redacted] 10' LOW PROFILE PLATFORM HANDRAIL KIT

ITEM	QTY.	PART NO.	DESCRIPTION	WEIGHT
1.	3	CS01533	PLATE, HANDRAIL SUPPORT	38#
2.	3	C10919126	PIPE, 1.90" O.D. (.145" WALL) X 10'-6"	89#
3.	3	C10981204	PIPE, 2 3/8" O.D. (.134" WALL) X 4'-0"	38#
4.	12	C40204100	CROSSOVER CLAMP (1.90" O.D. TO 2 3/8" O.D.)	48#
5.	12	C40034060	U-BOLT ASSEMBLY, 1/2 ø X 2 9/16"C/C	9#
6.	6	C40034023	U-BOLT ASSEMBLY, 5/8 ø X 3 1/16 C/C	10#
			TOTAL WEIGHT	232#

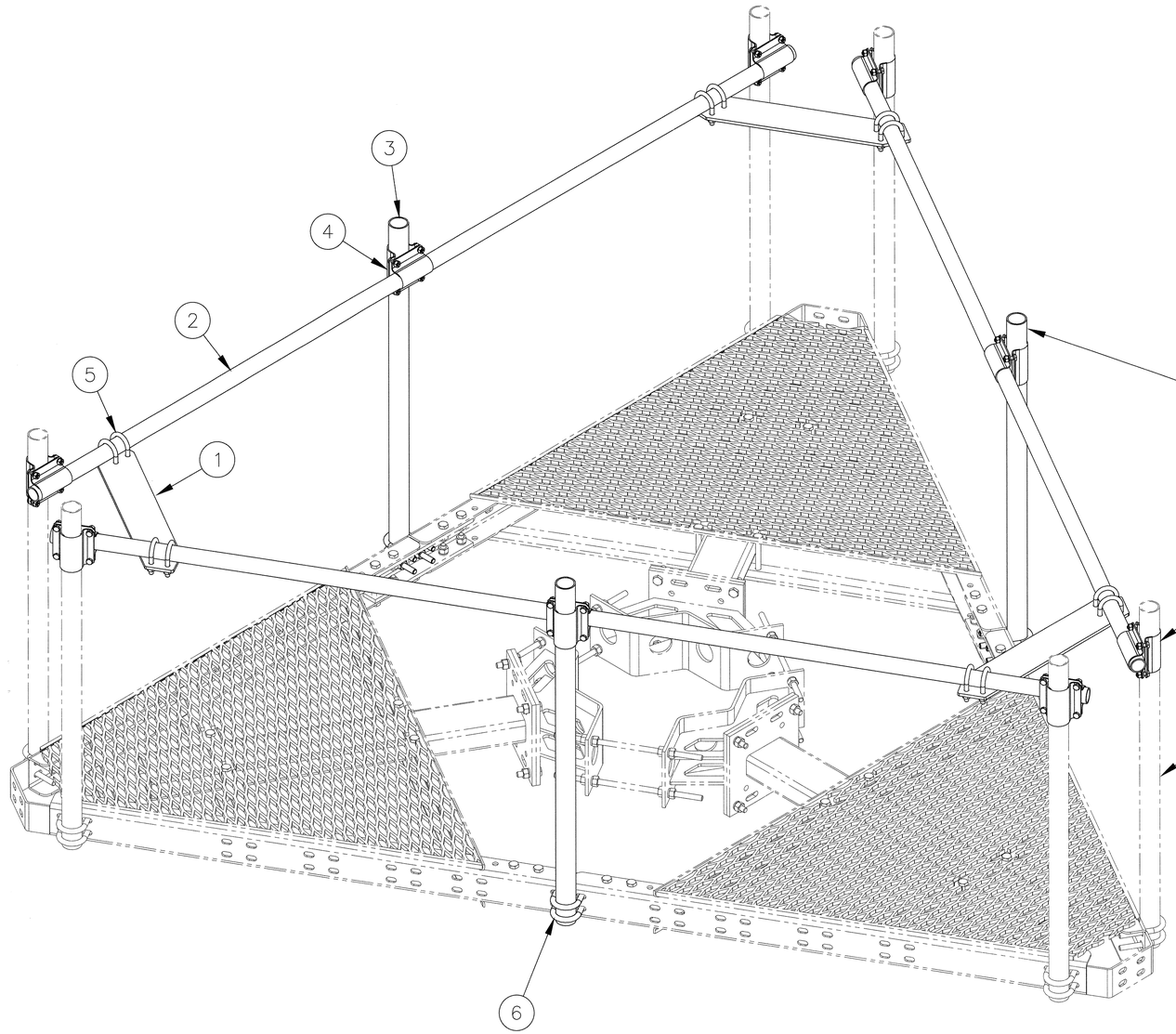

THIS PIPE MAY BE REPLACED WITH A LONGER PIPE IF NEEDED FOR ANTENNA MOUNTING (NOT REQ'D WITH 3 OR MORE MOUNTING PIPES PER FACE)

THERE ARE ENOUGH CLAMPS SUPPLIED TO ACCOMMODATE (12) ANTENNA MOUNTING PIPES – (4) PER FACE

ANTENNA MOUNTING PIPES TO BE PURCHASED SEPARATELY

ISOMETRIC VIEW

UNLESS OTHERWISE SPECIFIED
ALL DIMENSIONS INCLUDE FINISHES AND ARE IN INCHES

TOLERANCES: FRACTIONS ± 1/16"
ANGLES ± 1/2 DEG.
DECIMALS ± .010"

MATERIAL:

TOLERANCES DO NOT APPLY TO RAW MATERIAL

[redacted]

REV	DATE	DRW	CHK	DESCRIPTION
[redacted]				

[redacted]

CONFIDENTIAL
This document and the information contained herein is the confidential trade secret property of Sabre Communications Corporation ("Sabre") and must not be reproduced, copied or used, in whole or in part, for any purpose without the prior written consent of Sabre.
© 2014 Sabre Communications Corporation. All rights reserved.

10' LOW PROFILE PLATFORM HANDRAIL KIT
(10'-0" MAXIMUM ANTENNA SEPARATION)

		SIZE	DRAWING NO.	REV
DATE	[redacted]	D	[redacted]	4
DRAWN BY	[redacted]			
CHECKED BY	[redacted]		SCALE None	PAGE 1 OF 1

[redacted]

[redacted] MONOPOLE TOP STUB MAST ASSEMBLY

ITEM	QTY.	PART NO.	DESCRIPTION	WEIGHT
1.	1	CW01239	WELDMENT, PIPE STUB MAST 2 3/8 ø X 3'-6"	36
2.	1	C20999008	PIPE CAP, THREADED/GALV.	1
3.	1	C30086003	LIGHTNING ROD ASSEMBLY, 3/4 ø X 8'-0	12
4.	6	C40026053	BOLT ASSEMBLY, 3/4 ø X 4 1/2 A325	6
			TOTAL WEIGHT	55

ISOMETRIC VIEW

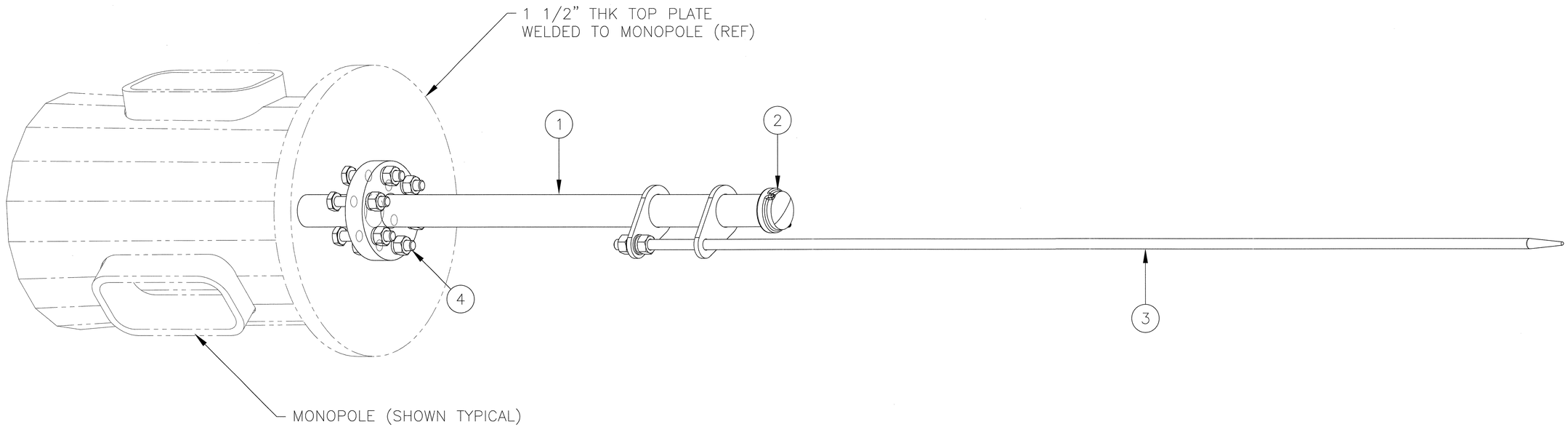

NOTE:

TOP OF PIPE EXTENDS 3 FT. ABOVE THE TOP OF MONOPOLE TOP PLATE.
BOTTOM OF PIPE EXTENDS 6" INTO MONOPOLE BELOW THE TOP OF MONOPOLE TOP PLATE.

UNLESS OTHERWISE SPECIFIED
ALL DIMENSIONS INCLUDE
FINISHES AND ARE IN INCHES

TOLERANCES: FRACTIONS ± 1/16"
ANGLES ± 1/2 DEG.
DECIMALS ± .010"

MATERIAL:

TOLERANCES DO NOT APPLY
TO RAW MATERIAL

[redacted]

REV	DATE	DRW	CHK	DESCRIPTION

CONFIDENTIAL
This document and the information contained herein is the confidential trade secret property of Sabre Communications Corporation ("Sabre") and must not be reproduced, copied or used, in whole or in part, for any purpose without the prior written consent of Sabre.
© 2014 Sabre Communications Corporation. All rights reserved.

MONOPOLE TOP STUB MAST ASSEMBLY

		SIZE	DRAWING NO.	REV
DATE	[redacted]	D	[redacted]	0
DRAWN BY	[redacted]			
CHECKED BY	[redacted]		SCALE None	PAGE 1 OF 1

SITE DATA

SITE INFORMATION

COUNTY: LOS ANGELES COUNTY
JURISDICTION: CITY OF LOS ANGELES
OCCUPANCY: U
ZONING: PF
A.P.N #: [redacted]
USE: UNMANNED PUBLIC SAFETY TELECOMMUNICATIONS FACILITY

FLOOD ZONE: X
LAND OWNER: [redacted]

EQUIPMENT MAINTENANCE:

ESTIMATED VISITS TO MAINTAIN EQUIPMENT ONCE SITE IS OPERATIONAL:
ONE TO TWO TIMES PER MONTH (TYPICAL)

BATTERIES:

BATTERIES TO BE INSTALLED WITHIN EQUIPMENT CABINET ARE GEL-FILLED AND DO NOT REQUIRE SPECIAL VENTILATION MEASURES WITHIN THE CABINET. REFERENCE ATTACHED SPECIFICATIONS.

PROJECT TYPE:

PROPOSED LA-RICS PSBN EQUIPMENT SITE WITH:

- PROPOSED EQUIPMENT CABINETS (TOTAL 4)
- PROPOSED ANTENNAS (2) PER SECTOR, (3) SECTORS TOTAL FACADE MOUNTED TO EXISTING BUILDING
- PROPOSED MICROWAVE ANTENNAS (1) TOTAL

LA-RICS

Los Angeles Regional Interoperable Communications System

[redacted]

PROJECT TEAM

SR.PROJECT MANAGER:

LA-RICS PROJECT TEAM
2525 CORPORATE PLACE, SUITE 200
MONTEREY PARK, CA 91754
CONTACT: [redacted]
CELL: [redacted]
EMAIL: [redacted]

PROJECT MANAGER:

[redacted]
CONTACT: [redacted]
CELL: [redacted]
EMAIL: [redacted]

PROJECT MANAGER:

GENERAL [redacted]
CONTACT: [redacted]
CELL: [redacted]

ARCHITECT:

[redacted]
TEL: [redacted]
CONTACT: [redacted]

SURVEYOR:

[redacted]
TEL: [redacted] FAX: [redacted]
TOLL FREE: [redacted]

STRUCTURAL ENGINEER:

[redacted]
TEL: [redacted]
CONTACT: [redacted]

ELECTRICAL ENGINEER:

[redacted]
TEL: [redacted]
EMAIL: [redacted]

SHEET INDEX

SHEET NO.	DESCRIPTION	REV. NO.
T1	TITLE SHEET	2
GN1	GENERAL NOTES	2
GN2	GENERAL NOTES	0
GN3	GENERAL NOTES	0
GN4	GENERAL NOTES	0
GN5	GENERAL NOTES	0
GN6	GENERAL NOTES	0
GN7	GENERAL NOTES & LEGEND	0
C1	TOPOGRAPHIC SURVEY	0
C2	TOPOGRAPHIC SURVEY	0
A1	SITE PLAN	2
A2	ENLARGED SITE PLAN	2
A3	TOWER ELEVATION	0
A4	EQUIPMENT DETAILS	0
A4.1	EQUIPMENT DETAILS	3
A5	PORT ASSIGNMENTS	0
A6	UTILITY DETAILS	3
A7	SITE SIGNAGE DETAILS	0
S1	GENERAL NOTES	1
S2	EXISTING PENTHOUSE FRAMING PLAN	1
SD1	STRUCTURAL DETAILS	1
SD2	STRUCTURAL DETAILS	1
E1	ELECTRICAL GENERAL NOTES	1
E2	UTILITY ROUTING PLAN	1
E3	ENLARGED UTILITY ROUTING PLAN	1
E4	ELECTRICAL DETAILS	2
E4.1	SINGLE LINE DIAGRAM	2
G1	GROUNDING GENERAL NOTES	0
G2	EXTERIOR GROUNDING PLAN	0
G3	GROUNDING DETAILS	0
G4	EQUIPMENT GROUNDING SYSTEM	0

LA-RICS
Los Angeles Regional Interoperable Communications System

[redacted]

UTILITIES

SCE CUSTOMER SERVICE
1-800-655-4555
SCE CONTACT: JULIO FELIX
TEL: 951-760-6611
ALL IMS INSPECTION REQUEST
EMAIL: IMS@sce.com

Underground Service Alert
Call: TOLL FREE
1-800
422-4133
TWO WORKING DAYS BEFORE YOU DIG
NOTIFY DIG-ALERT OR PRIVATE LOCATING COMPANY PRIOR TO ANY EXCAVATING OR TRENCHING

CENTER OF TOWER

LATITUDE:
LONGITUDE:
ELEVATION:
[redacted]
NAD 83

APPLICANT

[redacted]

ATTACHMENTS

[redacted]

UTILITY DESIGN

APPROVALS

[redacted]

APPLICABLE CODES

ALL WORK SHALL COMPLY WITH ALL APPLICABLE CODES, INCLUDING BUT NOT LIMITED TO:

2013 CALIFORNIA BUILDING CODE (CBC) / 2012 INTERNATIONAL BUILDING CODE (IBC)

2013 CALIFORNIA ELECTRICAL CODE (CEC) / 2011 NATIONAL ELECTRICAL CODE (NEC)

2013 CALIFORNIA MECHANICAL CODE (CMC) / 2012 UNIFORM MECHANICAL CODE (UMC)

2013 CALIFORNIA PLUMBING CODE (CPC) / 2012 UNIFORM PLUMBING CODE (UPC)

2013 CALIFORNIA FIRE CODE (CFC) / 2009 (IFC)

2012 NATIONAL FIRE PROTECTION ASSOCIATION (NFPA) 30A

2013 CGBSC (GREEN BUILDING CODE

2013 CALIFORNIA BUILDING ENERGY EFFICIENCY STANDARDS AND LOCAL CODE AMENDMENTS.

REGIONAL MAP

[redacted]

VICINITY MAP

[redacted]

DRIVING DIRECTIONS

[redacted]

NOTE: ALL INFORMATION IS SUBJECT TO FIELD VERIFICATION. ALL INFORMATION IS CONFIDENTIAL AND NOT FOR PUBLIC DISTRIBUTION WITHOUT EXPRESS CONSENT OF THE LOS ANGELES REGIONAL INTEROPERABLE COMMUNICATIONS SYSTEMS AUTHORITY

TITLE SHEET
T1

[redacted]

LA-RICS
Los Angeles Regional Interoperable Communications System

GENERAL NOTES:

1. THE CONTRACTOR WILL VERIFY AND ESTABLISH FIRST ORDER SURVEY POINTS FOR ALL SITES, NEW OR EXISTING, AND WILL ESTABLISH LINES, LEVELS, GRADES, BENCHMARKS, SURVEY REFERENCE POINTS, AND MEASUREMENTS NECESSARY FOR THE ACCURATE LAYOUT OF THE WORK.

2. CONTRACTOR WILL PROVIDE ALL LABOR, MATERIALS, TOOLS, EQUIPMENT, SAFETY EQUIPMENT, TRANSPORTATION, AND SERVICES NECESSARY TO COMPLETE ALL THE WORK OUTLINED IN ALL THE DRAWINGS, SPECIFICATIONS, SCOPE OF WORK, BILL OF MATERIALS, AND ANY OTHER DOCUMENT ISSUED BY [redacted]

3. THE CONTRACTOR SHALL COMPLY WITH ALL LOCAL AND NATIONAL CODES, LAWS, ORDINANCES, REGULATIONS, SAFETY REGULATIONS. ALL OSHA REGULATIONS, ALL PUBLIC AND MUNICIPAL AUTHORITIES, AND ANY UTILITY COMPANY REGULATIONS AND DIRECTIVES. MOST STRINGENT REQUIREMENT GOVERNS.

4. EXTREMELY SENSITIVE LANDLORD AND WORKING AREA. TEAM MUST REFRAIN FROM EXCESS NOISE. TEAM PROFESSIONALISM IS REQUIRED AT ALL TIMES. NO SMOKING ALLOWED ON COUNTY OR CITY PROPERTY.

5. ALL MATERIALS SUPPLIED BY THE [redacted] SHALL BE INSTALLED IN ACCORDANCE WITH ALL LOCAL AND NATIONAL CODES, LAWS, ORDINANCES, REGULATIONS AND PER MANUFACTURER'S RECOMMENDATIONS. MOST STRINGENT REQUIREMENT GOVERNS.

6. ANY CONTRACTOR SUBMITTING BIDS ON ANY OF THE WORK IS REQUIRED TO VISIT EACH SITE PRIOR TO THE BID SUBMITTAL AND FAMILIARIZE THEMSELVES WITH EXISTING CONDITIONS & UNDERSTAND THE SCOPE OF WORK INTENDED FOR THE PROJECT. SITE VISITS MUST BE PRE-ARRANGED WITH [redacted] & LARICS THIS WILL BE PERFORMED AT THE CONTRACTOR'S EXPENSE.

7. THE DRAWINGS AND SPECIFICATIONS ARE A GENERAL DIRECTIVE FOR THE SCOPE OF WORK. EXACT DIMENSIONS AND LOCATIONS MAY CHANGE IN THE FIELD. THE CONTRACTOR IS TO VERIFY THE DIMENSIONS AND LOCATIONS AND REPORT ANY AND ALL DISCREPANCIES TO [redacted] PRIOR TO COMMENCING THE RELATED WORK. ANY MINOR ERRORS OR OMISSIONS IN THE DRAWINGS AND SPECIFICATIONS, DOES NOT EXCUSE THE CONTRACTOR FROM COMPLETING THE PROJECT AND IMPROVEMENTS IN ACCORDANCE WITH THE INTENT OF THESE DOCUMENTS.

8. ALL SITES SHALL BE KEPT CLEAN AND FREE OF DEBRIS ON A DAILY BASIS. ALL TRASH AND MATERIALS NO LONGER BEING USED AT THE SITE MUST BE REMOVED AND PROPERLY DISPOSED OF ON A DAILY BASIS. ANY EXCESS MATERIAL WILL BE RETURNED TO [redacted] AND DELIVERED TO THE WAREHOUSING FACILITY PER THE DIRECTION OF [redacted] ONSITE FACILITY DUMPSTERS ARE NOT TO BE USED FOR THE DISPOSAL OF CONSTRUCTION DEBRIS.

8A. CONTRACTOR TO PROVIDE PORTABLE RESTROOMS.

9. THE CONTRACTOR SHALL NOT PROCEED WITH ANY WORK AT THE SITE PRIOR TO A NOTICE TO PROCEED (NTP) BEING ISSUED AND A PRE-CONSTRUCTION MEETING AT THE SITE HAS TAKEN PLACE. PRE-CONSTRUCTION MEETING WILL BE COORDINATED AND HELD A MIN. OF 7 DAYS PRIOR TO START AND NO EARLIER THEN 21 DAYS.

10. SITE CONSTRUCTION TO BE CONDUCTED UNDER NORMAL BUSINESS HOURS FROM 8AM TO 5PM.

11. THE CONTRACTOR SHALL HAVE A DESIGNATED MANAGER ON SITE AT ALL TIMES THAT ANY WORK IS BEING PERFORMED. A CONTRACTOR IS NOT DEFINED AS A DESIGNATED MANAGER.

12. THE CONTRACTOR SHALL PROVIDE A SCHEDULED LIST OF ALL CONTRACTORS, WHICH SHALL INCLUDE ADDRESSES, CELL PHONE NUMBERS, HOME PHONE NUMBERS, VERIFICATION OF INSURANCE, ANY AND ALL PERTINENT LICENSES, AND AN ACCURATE SCHEDULE FOR THE PROJECT PRIOR TO THE ISSUANCE OF A NOTICE TO PROCEED NTP. BADGES ARE REQUIRED.

13. CONTRACTOR WILL KEEP COMPLETE UP-TO-DATE SET OF THE DRAWINGS, SPECIFICATIONS, SCOPE OF WORK, AND BILL OF MATERIALS ON SITE AT ALL TIMES. THIS WILL BE REFERENCED AS THE AS-BUILT DRAWINGS AND MUST BE KEPT CURRENT ON A DAILY BASIS. THIS IS IN ADDITION TO THE PERMIT SET.

14. NEW AND CLEAN SETS OF CONTRACT DOCUMENTS WILL BE ISSUED TO THE CONTRACTOR NEAR THE COMPLETION OF THE PROJECT TO BE USED TO TRANSFER THE INFORMATION FROM THE FIELD COPY OF AS-BUILT DRAWINGS TO THE NEW COPY. THIS NEEDS TO BE SUBMITTED TO [redacted] WITH THE CLOSE-OUT DOCUMENTS, 6 VERIFIED COPIES TOTAL. AS-BUILDS TO BE SUBMITTED IN ELECTRONIC (PDF & AUTOCAD) FORMAT AND REPRODUCIBLE FORMATS.

15. ON ANY COLLOCATION SITE, THE CONTRACTOR AND ALL SUB'S ASSIGNED ARE NOT TO USE EXISTING POWER OR TAMPER WITH ANY EQUIPMENT BELONGING TO ANY OTHER CARRIER. FAILURE TO ADHERE TO THIS WILL CAUSE IMMEDIATE DISMISSAL OF THE CONTRACTOR FROM THE PROJECT.

16. THE CONTRACTOR IS RESPONSIBLE FOR SCHEDULING ALL INSPECTIONS AND TESTING REQUIRED FOR EACH PROJECT. A 24-HOUR NOTIFICATION TO [redacted] IS REQUIRED FOR ALL INSPECTIONS AND TESTING. A FIELD COPY OF ALL INSPECTION AND TESTING REPORTS AS WELL AS TRUCK TICKETS MUST BE SUBMITTED TO [redacted] WITHIN THE CLOSEOUT PACKAGE.

17. THE CONTRACTOR IS RESPONSIBLE TO VERIFY ALL MATERIAL ISSUED TO HIM/ HER, AND TO REPORT ANY SHORTAGES AND DISCREPANCIES TO [redacted] AT THE TIME OF ISSUANCE. THE CONTRACTOR SHALL STORE THESE MATERIALS PROPERLY, ACCORDING TO THE MANUFACTURER'S RECOMMENDATIONS AND IN A MANNER THAT WILL NOT VOID THE WARRANTY OF ANY ITEM. IF ANY ITEM IS DAMAGED OR UNUSABLE DUE TO IMPROPER HANDLING AND STORAGE, THE CONTRACTOR WILL REPLACE IT AT HIS/ HER EXPENSE.

18. THE CONTRACTOR IS RESPONSIBLE TO FURNISH PROPER FACILITIES FOR THE WORKERS ON EACH PROJECT FOR THE DURATION OF THAT PROJECT. WORKERS ARE NOT ALLOWED TO USE FACILITY REST ROOMS AT ANYTIME.

GENERAL NOTES (CONTINUED):

19. THE CONTRACTOR IS RESPONSIBLE TO MAINTAIN THE PRESENT CONDITION OF ANY EXISTING BUILDINGS, LANDSCAPING, FENCING, EQUIPMENT, WALKS, DRIVES, AND ATTACHMENTS. IF ANY DAMAGE SHOULD OCCUR, THE CONTRACTOR IS RESPONSIBLE TO RESTORE THE DAMAGE TO A BETTER OR NEW CONDITION. CONTRACTOR SHALL COMPLY WITH SITE CLEANLINESS REQUIREMENTS.

20. NO SMOKING ON LOS ANGELES COUNTY OR CITY PROPERTY AT ANYTIME.

21. TOWER CLIMBERS PROFESSIONALS TO PRESENT CLIMBING CERTIFICATION WITHIN TWO YEARS FROM EXPIRATION DATES.

22. THE CONTRACTOR WILL REMOVE FROM THE PROJECT SITE, TRANSPORT AND DISPOSE AT AUTHORIZED DUMP SITES AT ITS COST, ANY EXISTING STRUCTURE TO BE REPLACED UNLESS DIRECTED OTHERWISE BY THE AUTHORITY. THIS INCLUDES ANY EXISTING FLAG POLE, OR ANTENNA SUPPORT STRUCTURE THAT WILL BE REPLACED. EXCEPT FOR A MONOPOLE, HOSE RACK, GUYED TOWER, OR SELF-SUPPORTING COMMUNICATION TOWER. THE AUTHORITY SHALL RECOVER ANY SALVAGE VALUE FROM THE DISPOSAL OF THESE STRUCTURES.

23. CONTRACTOR TO COORDINATE WITH AUTHORITY TO RELOCATE ANY EXISTING EQUIPMENT, WHERE APPLICABLE.

24. NAMEPLATES WILL BE PLASTIC LAMINATED, WHITE FACE WITH BLACK ENGRAVED CHARACTERS AND WILL COMPLY WITH BTOP LABELING REQUIREMENTS.

PART 1 – PROJECT GENERAL NOTES:

1.1 SCOPE OF WORK

A. PROVIDE ALL LABOR, MATERIAL, TOOLS, EQUIPMENT, TRANSPORTATION AND SERVICES NECESSARY FOR AND INCIDENTAL TO COMPLETION OF ALL WORK AS INDICATED ON THE DRAWINGS AND /OR AS SPECIFIED HEREIN.

1.2 DRAWING USE AND INTERPRETATION

A. THE DRAWINGS ARE DIAGRAMMATIC AND INDICATE THE GENERAL ARRANGEMENT OF SYSTEMS AND EQUIPMENT UNLESS INDICATED OTHERWISE BY DIMENSIONS OR DETAILS. EXACT EQUIPMENT LOCATIONS AND ROUTINGS, ETC. SHALL BE GOVERNED BY ACTUAL FIELD CONDITIONS AND/ OR INSTRUCTIONS OF [redacted]

B. ANY CHANGE MUST BE APPROVED IN WRITING BY [redacted] PRIOR TO WORK BEING DONE. AS-BUILD REDLINE CHANGES MUST BE MAINTAINED ONSITE DURING CONSTRUCTION ACTIVITIES.

1.3 COMPLETE SYSTEMS

A. GENERAL: FURNISH AND INSTALL ALL MATERIALS AS REQUIRED FOR COMPLETE SYSTEMS, WHETHER SPECIFICALLY INDICATED OR NOT. ALL SYSTEMS SHALL BE COMPLETELY ASSEMBLED, TESTED, ADJUSTED, DEMONSTRATED TO BE READY FOR OPERATION PRIOR TO OPERATORS ACCEPTANCE.

1.4 CODES AND REGULATIONS

A. GENERAL: COMPLY WITH ALL GOVERNING FEDERAL, STATE AND LOCAL LAWS, ORDINANCES, CODES, RULES AND REGULATIONS. WHERE THE CONTRACT DOCUMENTS EXCEED THESE REQUIREMENTS, THE CONTRACT DOCUMENTS SHALL GOVERN. IN NO CASE SHALL WORK BE INSTALLED CONTRARY TO OR BELOW MINIMUM LEGAL STANDARDS.

B. UTILITIES: COMPLY WITH ALL APPLICABLE RULES, RESTRICTIONS, AND REQUIREMENTS OF THE UTILITY COMPANIES SERVING THE PROJECT SITE/ FACILITIES.

C. NONCOMPLIANCE: SHOULD ANY WORK BE PERFORMED WHICH IS FOUND NOT TO COMPLY WITH ANY OF THE ABOVE, CONTRACTOR SHALL PROVIDE ALL WORK AND PAY ALL COSTS NECESSARY TO CORRECT THE DEFICIENCIES.

D. CONSTRUCTION MANAGEMENT REQUIREMENT: REFER TO THE CMR SITE FOR SITE SPECIFIC CONSTRUCTION REQUIREMENTS.

1.5 REFERENCE STANDARDS

A. ALL LATEST PUBLISHED STANDARDS OF THE FOLLOWING ASSOCIATIONS/ ORGANIZATIONS SHALL BE FOLLOWED AND APPLIED WHERE APPLICABLE, AS MINIMUM REQUIREMENTS.

1. CALIFORNIA CODE OF REGULATIONS, TITLE 24:

- PART 1: NAMED THE CALIFORNIA BUILDING STANDARDS ADMINISTRATIVE CODE;
- PART 2: VOLUME 1 AND 2, NAMED THE CALIFORNIA BUILDING CODE AND IS BASED ON THE 2012 INTERNATIONAL BUILDING CODE
- PART 3: NAMED THE CALIFORNIA ELECTRICAL CODE AND IS BASED ON THE 2011 NATIONAL NATIONAL ELECTRICAL CODE
- PART 4: NAMED THE CALIFORNIA MECHANICAL CODE AND IS BASED ON THE 2012 UNIFORM MECHANICAL CODE
- PART 5: NAMED THE CALIFORNIA PLUMBING CODE AND IS BASED ON THE 2012 UNIFORM PLUMBING CODE

1.5 REFERENCE STANDARDS (CONTINUED):

- PART 6: NAMED THE CALIFORNIA ENERGY CODE
- PART 7: CURRENTLY VACANT
- PART 8: NAMED THE STATE HISTORICAL BUILDING CODE
- PART 9: NAMED THE CALIFORNIA FIRE CODE AND IS BASED ON THE 2009 INTERNATIONAL FIRE CODE
- PART 10: NAMED THE CALIFORNIA EXISTING BUILDING CODE AND IS BASED THE 2009 INTERNATIONAL EXISTING BUILDING CODE
- PART 11: NAMED THE CALIFORNIA GREEN BUILDING STANDARDS CODE, AND IS ALSO CALLED THE CALGREEN CODE
- PART 12: NAMED THE CALIFORNIA REFERENCE STANDARDS CODE

1.6 PERMITS

1. ALL PERMITS REQUIRED BY ALL APPLICABLE AGENCIES, WILL BE OBTAINED BY THE CONTRACTOR.

GENERAL NOTES
GN1

NOTE: ALL INFORMATION IS SUBJECT TO FIELD VERIFICATION. ALL INFORMATION IS CONFIDENTIAL AND NOT FOR PUBLIC DISTRIBUTION WITHOUT EXPRESS CONSENT OF THE LOS ANGELES REGIONAL INTEROPERABLE COMMUNICATIONS SYSTEMS AUTHORITY.

LA-RICS
Los Angeles Regional Interoperable Communications System

1.7 SUBMITTALS

A. REQUIRED SUBMITTALS INCLUDE: LIST OF CONTRACTORS; PRODUCT DATA; SHOP DRAWINGS; AND VARIOUS ADMINISTRATIVE SUBMITTALS.

B. RECORD DOCUMENTS: INDICATED ACTUAL INSTALLED LOCATIONS FOR ALL EQUIPMENT AND DEVICES ROUTING OR MAJOR INTERIOR RACEWAYS. LOCATIONS OF ALL CONCEALED AND UNDERGROUND EQUIPMENT AND RACEWAYS AND ALL APPROVED MODIFICATIONS TO THE CONTRACT DOCUMENTS, AND DEVIATIONS NECESSITATED BY FIELD CONDITIONS AND CHANGE ORDERS.

C. SAFETY MEETING(S) MINUTES.

D. NUMBER OF COPIES OF ALL SUBMITTALS: TWO

1.8 QUALITY ASSURANCES

A. MANUFACTURERS QUALIFICATIONS: NOT LESS THAN THREE YEARS EXPERIENCE IN THE ACTUAL PRODUCTION OF THE SPECIFIED PRODUCTS.

B. INSTALLERS QUALIFICATIONS: FIRM WITH NOT LESS THAN FIVE YEARS EXPERIENCE IN THE INSTALLATION OF ELECTRICAL SYSTEMS AND EQUIPMENT SIMILAR IN SCOPE AND COMPLEXITY TO THOSE REQUIRED FOR THIS PROJECT, AND HAVING SUCCESSFULLY COMPLETED AT LEAST TEN COMPARABLE SCALE PROJECTS.

C. INCIDENTAL WORK: PAINTING, PATCHING WELDING, CARPENTRY, MECHANICAL WORK AND THE LIKE REQUIRED FOR WORK SHALL BE PERFORMED BY CRAFTSMAN SKILLED IN THE APPROPRIATE TRADE.

D. THE CONTRACTOR IS TO REVIEW AND UNDERSTAND THE SITE INSPECTION CHECKLIST FOR THE SITE PHOTO, QA AND CLOSEOUT.

E. CONTRACTOR IS RESPONSIBLE FOR COMPLETING THE CERTIFICATION OF HAZARD ASSESSMENT ON A DAILY BASIS. IN ADDITION TO THE SITE HAZARDS, THE FORM NEEDS TO INCLUDE INFORMATION ON THE NEAREST HOSPITALS, FIRE DEPARTMENT AND POLICE DEPARTMENT AND SITE ADDRESS OR LAT/LONG.

F. THE CONTRACTOR SHALL HAVE AT LEAST TWO PERSONS ON SITE AT ALL TIMES WITH VALID CERTIFICATIONS IN THE FIRST AID AND CPR.

1.9 INSPECTIONS

A. GENERAL: DURING AND UPON COMPLETION OF THE WORK, ARRANGE AND PAY ALL ASSOCIATED COSTS FOR INSPECTION OF ALL ELECTRICAL WORK INSTALLED UNDER THIS CONTRACT, IN ACCORDANCE WITH THE CONDITIONS OF THE CONTRACT.

B. INSPECTIONS REQUIRED: AS PER THE LAWS AND REGULATIONS OF THE LOCAL AND/ OR STATE AGENCIES HAVING JURISDICTION AT THE PROJECT SITE. SEE AUTHORITY FOR ADDITIONAL INFORMATION FOR INSPECTION AND NOTIFICATION PROCESSES.

C. INSPECTION AGENCY: APPROVED BY THE LOCAL AND/ OR STATE AGENCIES HAVING JURISDICTION AT THE PROJECT SITE.

D. CERTIFICATES: SUBMIT ALL REQUIRED INSPECTION CERTIFICATES.

E. STATEMENT OF SPECIAL INSPECTIONS: WHERE SPECIAL INSPECTION OR TESTING IS REQUIRED BY SECTION 1705, THE REGISTER DESIGN PROFESSIONAL IN RESPONSIBLE CHARGE SHALL PREPARE A STATEMENT OF SPECIAL INSPECTIONS IN ACCORDANCE WITH SECTION 1704.2.3 OF THE 2013 CBC

F. CONTRACTOR TO PROVIDE ALL REQUIRED THIRD PARTY SPECIAL INSPECTOR OR DEPUTY INSPECTOR TO ENSURE THEY INCLUDE INSPECTIONS AND TESTS REQUIRE BY SECTION 1705 (CBC 2013), BUT NOT LIMITED TO:

- FOUNDATIONS
- CONDUITS
- ELECTRICAL
- TOWER SOILS
- TOWER FOUNDATION REBAR
- TRENCHING AND BACK FILL
- COMPACTION TEXT (6" PLACED LAYERS TO BE COMPACTED AT LEAST 95%)
- TOWER ASSEMBLY
- STEEL PLATFORM ASSEMBLY
- FINAL SITE INSPECTION

INCLUDES ALL TRAVEL, PER DIEM AND EXPENSES IN THE PROVIDED COST.

G. ADDITIONAL INSPECTIONS THAT REQUIRE NOTIFICATION TO AUTHORITY
- TESTING EXISTING GENERATOR USING APPROX SIZED LOAD BANK, WITNESSED BY AUTHORITY.

1.10 DELIVERY STORAGE AND HANDLING

A. PACKING AND SHIPPING: DELIVER PRODUCTS IN ORIGINAL UNOPENED PACKAGING, PROPERLY IDENTIFIED WITH MANUFACTURER'S IDENTIFICATION, AND COMPLIANCE LABELS.

B. STORAGE AND PROTECTION: COMPLY WITH ALL MANUFACTURER'S WRITTEN RECOMMENDATIONS. STORE ALL PRODUCTS IN A MANNER WHICH SHALL PROTECT THEM FROM DAMAGE, WEATHER, AND ENTRY OF DEBRIS.

C. DAMAGED PRODUCTS: DO NOT INSTALL DAMAGED PRODUCTS. ARRANGE FOR PROMPT REPLACEMENT.

D. CONTRACTOR RESPONSIBLE FOR MATERIALS UPON RECEIPT.

E. CONTRACTOR SHALL COORDINATE MATERIAL STAGING AND SITE STORAGE WITH EACH SITE COMPETENT PARTY.

1.11 LANDSCAPING

A. THE CONTRACTOR SHALL GRUB THE SITE AREA AND ANY ACCESS ROAD, CLEARING AND REMOVING A MINIMUM OF 6" TO ACHIEVE A STABLE SUB-BASE TO ACCEPT FILL OR OTHER MATERIAL SPECIFIED FOR THE SITE AND NOT REUSED IN ANY PART OF THIS PROJECT.

B. IT IS THE CONTRACTOR'S SOLE RESPONSIBILITY TO CALL THE LOCAL LOCATING AUTHORITIES (OR PRIVATE LOCATING SERVICES AND OTHER STEPS AS REQUIRED TO VERIFY THE LOCATION OF ANY UNDERGROUND UTILITIES OR LINES THAT EXIST WITHIN THE ENTIRE PROJECT AREA. THE CONTRACTOR SHALL PLACE THESE ITEMS ON THE AS-BUILT DRAWINGS.

C. IF NEW LANDSCAPING IS REQUIRED REFER TO LANDSCAPE SHEETS ATTACHED FOR DETAILS. CONTRACTOR TO PROVIDE NURSERY BILL OF LADING.

D. ALL ROADWORK AND MATERIALS SHALL CONFORM TO ALL STATE AND LOCAL CODES IN ACCORDANCE WITH THE DEPARTMENT OF HIGHWAY AND PUBLIC TRANSPORTATION STANDARD SPECIFICATIONS.

E. THE ACCESS ROAD, IF REQUIRED, WILL BE CONSTRUCTED FIRST BEFORE ANY OTHER WORK ON THE SITE IS PERMITTED. BRING THE ROAD TO SUB-BASE COURSE TO ALLOW CONSTRUCTION TRAFFIC TO USE THE ROAD FOR THE PROJECT, AND COMPLETE THE ROAD AFTER THE CONSTRUCTION OF THE SITE IS SUBSTANTIALLY COMPLETE.

F. THE CONTRACTOR WILL PROVIDE FINISHED GRADING THAT WILL BE PERFORMED AFTER THE WORK IN THE AREA IS COMPLETE AND JUST PRIOR TO PLACING GRAVEL SURFACING. FILL, IF NECESSARY, WILL BE BROUGHT TO FINISHED GRADES INDICATED AND WILL BE GRADED TO DRAIN WATER AWAY FROM STRUCTURES. A MINIMUM SLOPE OF 2% WILL BE PROVIDED FOR POSITIVE DRAINAGE AWAY FROM PROPOSED STRUCTURES. GRADING WILL PROVIDE AN EVEN, SMOOTH SURFACE FREE FROM CELLULOSE MATERIALS, LARGE ROCKS, AND OTHER DELETERIOUS MATERIALS.

G. ALL ACCESS ROAD AND SITE AREAS WILL HAVE AN UNDERLAY OF AMOCO PROPEX, OR EQUAL.

H. A SOIL STERILIZER SHALL BE APPLIED TO ALL GRAVEL SURFACES, AND BE AN EPA REGISTERED LIQUID COMPOSITION AND OF PRE-EMERGENCE DESIGN. THE PRODUCT LABEL AND INFORMATION WILL BE GIVEN TO [redacted]

I. GRAVEL FILL SHALL BE WELL-GRADED, HARD, DURABLE, NATURAL SAND AND GRAVEL, FREE FROM ICE AND SNOW, ROOTS SOD RUBBISH, AND OTHER DELETERIOUS OR ORGANIC MATTER. MATERIAL SHALL CONFORM TO THE FOLLOWING GRADATION REQUIREMENTS:

SIEVE NUMBER	% PASSING BY WEIGHT
4"	100
1/2"	50-85
#4	40-75
#10	30-60
#40	10-30
#100	5-20
#200	0-8

J. ALL FILL DIRT SHALL BE CLEAN AND NATURAL, FREE FROM ANY DELETERIOUS MATERIALS, ROOTS, ICE, SNOW, SOD, AND RUBBISH. A COPY OF ALL DELIVERY TICKETS WILL BE SUBMITTED TO [redacted] WITHIN 24 HOURS FROM THE DELIVERY.

K. TRENCHES SHALL HAVE A CLEAN COMPATIBLE FILL PLACED IN MAXIMUM LIFTS OF 6", AND MECHANICALLY COMPACTED TO A DENSITY OF 95% (REFER TO SOILS REPORT FOR SITE SPECIFIC REQUIREMENTS BY ENGINEER). METALLIC WARNING TAPE (RED W/ FOIL BACKING) SHALL BE PLACED AT 12" BELOW FINISHED GRADE ALONG THE ENTIRE TRENCH. ANY DEVIATION FROM SOILS REPORT SHALL BE APPROVED BY SOIL ENGINEER AND AUTHORITY.

L. ALL COMPACTING OF SITE AREAS SHALL BE ACCOMPLISHED BY MECHANICAL MEANS. LARGER AREAS SHALL BE COMPACTED BY POWER-DRIVEN HAND HELD TAMPER. ALL COMPACTED AREAS SHALL BE COMPACTED WITHIN 95% (REFER TO SOILS REPORT FOR SITE SPECIFIC REQUIREMENTS BY ENGINEER) AND TESTED BY AN INDEPENDENT LABORATORY AND ACCOMPANIED BY GEOTECHNICAL REPORT. IT WILL BE THE RESPONSIBILITY OF THE CONTRACTOR TO SCHEDULE TESTING. ANY SCHEDULING FOR A PROCTOR WILL BE THE CONTRACTORS RESPONSIBILITY, AND MUST BE DONE IN A TIMELY FASHION TO ASSURE THE PROJECT WILL NOT BE DELAYED. ANY DEVIATION FROM SOILS REPORT SHALL BE APPROVED BY SOIL ENGINEER AND AUTHORITY.

M. ANY FILL OR STONE WILL BE PLACED IN MAXIMUM 6" LIFTS PRIOR TO COMPACTING.

N. FINISHED GRADE, INCLUDING TOP SURFACE COURSE, SHALL EXTEND A MINIMUM 12" BEYOND THE SITE FENCE AND SHALL COVER THE AREA AS INDICATED USING CRUSHED STONE #3.

O. USE RIP RAP IN AREAS WITH SLOPE GREATER THEN 2:1, IN THE ENTIRE DITCH FOR 6 FEET IN ALL DIRECTIONS AT CULVERT OPENINGS. SUBJECT TO APPROVAL BY STRUCTURAL AND SOIL ENGINEER.

P. SEED FERTILIZER AND STRAW COVER SHALL BE APPLIED TO ALL OTHER DISTURBED AREAS, DITCHES, DRAINAGE, AND SWALES NOT OTHERWISE RIPRAPPED. SEED AND FERTILIZER SHALL BE APPLIED TO SURFACE CONDITIONS THAT WILL ENCOURAGE ROOTING. PREPARE SURFACE PROPERLY TO ACCEPT SEEDS. SOW SEEDS IN TWO OPPOSITE DIRECTIONS IN TWICE THE QUANTITY RECOMMENDED BY THE SEED PRODUCER.

Q. THE CONTRACTOR IS RESPONSIBLE TO ENSURE GROWTH OF THE SEEDED AND LANDSCAPED AREAS BY WATERING, STRAW, MULCH, NET, AND ANY OTHER PROPER LANDSCAPING METHOD NECESSARY. ALL AREAS MUST HAVE SUSTAINED GROWTH BY THE TIME OF COMPLETION OF PROJECT.

R. THE CONTRACTOR SHALL PROTECT ALL AREAS FROM WASHOUTS AND SOIL EROSION. STRAW BALES SHALL BE PLACED AT THE INLET APPROACH TO ALL NEW OR EXISTING CULVERTS.

1.12 MAINTAINING SITE CONDITIONS

A. THE CONTRACTOR IS RESPONSIBLE FOR MAINTAINING A NEAT AND ORDERLY PROJECT SITE. REMOVE AND DISPOSE OFF SITE ALL RUBBISH, WASTE, LITTER, AND ALL FOREIGN SUBSTANCES IN A LEGAL MANNER. REMOVE PETROCHEMICAL SPILLS, STAINS, AND OTHER FOREIGN DEPOSITS IN COMPLIANCE WITH OSHA REGULATIONS. RETURN ALL SURFACES TO ORIGINAL CONDITION. CONTRACTOR SHALL COMPLY WITH ALL BMP REQUIREMENTS.

B. THE CONTRACTOR SHALL COMPLY WITH ALL CMR AND BMP REQUIREMENTS.

1.13 CONCRETE

A. APPROVED CONCRETE MIX DESIGN IS REQUIRED PRIOR TO ORDERING AND PLACING CONCRETE.

B. ALL MATERIALS, LABOR, AND METHODS SHALL CONFORM TO ALL APPLICABLE ASTM AND ACI STANDARDS AND REQUIREMENTS. IT IS THE CONTRACTORS RESPONSIBILITY TO INSURE THAT ALL STANDARDS ARE MET, AND TO BE ABLE TO PRODUCE VERIFICATION OF THESE ITEMS UPON REQUEST.

C. THE CONTRACTOR WILL PROVIDE CONCRETE DELIVERY TICKETS TO SPECIFY THE TRUCK'S TIME OF DEPARTURE FROM THE BATCH PLANT AND THE DRUM ROTATION COUNTER NUMBER, AND THAT COPIES ARE PROVIDED TO THE AUTHORITY'S PROJECT MANAGER.

D. THE AUTHORITY'S PROJECT MANAGER, OR OTHER MEMBERS OF THE AUTHORITY OR THEIR DESIGNATED REPRESENTATIVE(S), WILL INSPECT THE PLACEMENT AND CONDITION OF THE STEEL REINFORCING AND WILL OBSERVE CONCRETE PLACEMENT.

E. THE CONTRACTOR IS ADVISED THAT FAILURE TO MEET THIS NOTIFICATION REQUIREMENT WILL RESULT IN ADDITIONAL TESTING AT THE CONTRACTOR'S EXPENSE.

F. THE CONTRACTOR WILL ENGAGE A CERTIFIED TESTING LAB, APPROVED BY THE AUTHORITY, TO BE ON-SITE DURING DELIVERY AND PLACEMENT OF CONCRETE. THE LAB WILL BE THE SOLE JUDGE OF THE ACCEPTABILITY OF THE CONCRETE ARRIVING AT THE SITE.

G. THE LAB WILL PROVIDE CONCRETE TESTING DURING PLACEMENT AND WILL INSPECT AND CERTIFY REINFORCING STEEL AND FORM WORK PRIOR TO PLACEMENT

H. THE CONTRACTOR WILL VERIFY THAT CONCRETE TESTS INCLUDE TIME OF PLACEMENT, TEMPERATURE, DRUM ROTATION, SLUMP, AND AIR ENTRAINMENT.

I. THE CONTRACTOR WILL VERIFY THAT TIME OF PLACEMENT WILL BE NO GREATER THAN NINETY MINUTES FROM DEPARTURE FROM THE BATCH PLANT. IF CONDITIONS PRECLUDE MEETING THE NINETY MINUTES REQUIREMENT, ALTERNATIVE METHODS WILL BE PROPOSED. METHODS ARE AT CONTRACTORS SOLE COST AND IN FULL COMPLIANCE WITH ALL REQUIREMENTS OF LAW AND INDUSTRY STANDARDS.

J. THE CONTRACTOR WILL VERIFY THAT SLUMP IS NO GREATER THAN SPECIFIED BY THE ENGINEER OF RECORD.

K. THE CONTRACTOR SHALL SCHEDULE ALL INSPECTIONS AT THE TESTING LABORATORY, AND INFORM [redacted] WITHIN 24 HOURS OF THE INSPECTION OR TEST. CYLINDERS SPECIMENS WILL BE MADE IN ACCORDANCE WITH ASTM C. TEST AGES OF THE SPECIMENS SHALL BE 3/7/28 DAYS. ONE SET OF SPECIMENS (ONE 3 DAY CYLINDER, ONE 7 DAY CYLINDER, TWO SPARE 28-DAY CYLINDERS) WILL BE MADE FOR APPROXIMATELY EVERY 50 CUBIC YARDS (38 CUBIC METERS) PLACED. EACH SET OF SPECIMENS WILL BE MOLDED FROM THE SAME BATCH OF CONCRETE AND WILL CONSIST OF ONE CYLINDER TO PROVIDE A 7-DAY COMPRESSIVE TEST (THE EXTRA CYLINDER WILL BE A BACK-UP IN THE EVENT OF AN OBVIOUS DEFECTIVE CYLINDER). SAMPLES REQUIRED ON ALL LA-RICS FOUNDATIONS ARE TO BE INCLUDED IN TESTING AND FINAL REPORTS.

L. ALL CONCRETE FOR THE PROJECT SHALL HAVE A 28-DAY STRENGTH OF 4,000 PSI (UNLESS OTHERWISE SPECIFIED) AND A SLUMP OF 6" MAXIMUM WITH THE MIXTURE PROPORTIONS MEETING ASTM AND ACI REQUIREMENTS. ALL ADMIXTURES AND MATERIALS FOR THE CONCRETE MIXTURE SHALL ALSO CONFORM TO PROPER ASTM REQUIREMENTS.

M. THE CONTRACTOR WILL INSTRUCT THE CONCRETE SUPPLIER TO HAVE AN APPROVED PLASTICIZER ON THE TRUCK TO AID IN THE POURING AND PLACING OF PIERS AND FOUNDATIONS.

N. AIR ENTRAINING AGENT SHALL BE USED IN ANY CONCRETE EXPOSED TO FREEZING TEMPERATURES.

O. THE CONTRACTOR IS RESPONSIBLE FOR ALL EMBEDMENT LOCATIONS, SIZES, AND PROPER ANCHORING TO HOLD THE ITEMS IN PLACE ACCURATELY.

P. CONTRACTOR WILL SUPPLY AND USE A RELEASING AGENT ON ALL FORMS. ANY ATTACHMENT TO EXISTING CONCRETE AREAS WILL BE DONE WITH SMOOTH DOWELS AT 18" O.C. WITH A MINIMUM 6" EMBEDMENT IN EACH DIRECTION AND AN APPROVED BONDING AGENT TO BE APPLIED TO THE EXISTING SURFACE.

NOTE: ALL INFORMATION IS SUBJECT TO FIELD VERIFICATION. ALL INFORMATION IS CONFIDENTIAL AND NOT FOR PUBLIC DISTRIBUTION WITHOUT EXPRESS CONSENT OF THE LOS ANGELES REGIONAL INTEROPERABLE COMMUNICATIONS SYSTEMS AUTHORITY.

[redacted]

GENERAL NOTES
GN2

1.13 CONCRETE (CONTINUE)

R. ALL EXPOSED CONCRETE WILL HAVE A UNIFORM FINISH AND BE SLOPED FOR DRAINAGE OFF THE SURFACE UNLESS OTHERWISE NOTED IN THE PLANS OR SPECIFICATIONS.

S. THE CONTRACTOR SHALL PROTECT THE CONCRETE FROM ANY ADVERSE WEATHER CONDITIONS; PREMATURE DRYING AND MECHANICAL INJURY TO INSURE PROPER CURING.

T. THE CONTRACTOR SHALL BE RESPONSIBLE FOR THE USE AND CONTROL OF ANY MECHANICAL EQUIPMENT TO INSURE THE PROPER PLACEMENT OF THE CONCRETE TO PREVENT ANY VOIDS OR CAPS.

U. THE CONTRACTOR WILL PROVIDE CONCRETE THAT IS MIXED AND PLACED ONLY WHEN THE TEMPERATURE IS AT LEAST FORTY (40) DEGREES F. AND RISING. WHEN TEMPERATURE IS NINETY (90) DEGREES F. OR ABOVE, OR IS LIKELY TO RISE ABOVE NINETY (90) DEGREES F. WITHIN THE TWENTY-FOUR (24) HOUR PERIOD AFTER CONCRETE PLACEMENT, THE CONTRACTOR WILL FOLLOW RECOMMENDATIONS OF ACI 305.

V. ALTERNATIVELY, WHEN THE TEMPERATURE OF THE SURROUNDING AIR IS BELOW FORTY DEGREES (40) F., CONCRETE WILL HAVE A TEMPERATURE BETWEEN SIXTY (60) DEGREES F. AND NINETY (90) DEGREES F. WHEN PLACING CONCRETE, THE CONTRACTOR WILL FOLLOW THE RECOMMENDATIONS OF ACI 306 OR THE LATEST VERSION.

W. THE CONTRACTOR WILL PROVIDE CONCRETE FOR DRILLED FOUNDATIONS THAT IS PLACED WITH A TREMIE HAVING A DIAMETER OF AT LEAST EIGHT TIMES THE MAXIMUM SIZE OF THE AGGREGATE. CONCRETE WILL BE PLACED WITH THE AID OF MECHANICAL VIBRATION EQUIPMENT APPLIED DIRECTLY TO THE CONCRETE FOR THE TOP 10 FEET. THE INTENSITY OF VIBRATION WILL BE SUFFICIENT TO CAUSE FLOW OR SETTLEMENT OF CONCRETE IN PLACE WITHOUT CAUSING SEGREGATION OF THE MIX.

X. ALL REINFORCING STEEL WILL BE NEW DEFORMED BARS, CONFORMING TO ASTM A-615 REFER TO STRUCTURAL SHEETS/NOTES. THE CONTRACTOR WILL PROVIDE CONCRETE THAT IS PLACED CONTINUOUSLY TO AVOID COLD JOINTS. COLD JOINTS ARE NOT PERMITTED AND WILL RESULT IN REJECTION OF THE STRUCTURE BY THE AUTHORITY.

Y. TIME OF PLACEMENT WILL BE NO GREATER THEN NINETY MINUTES FROM DEPARTURE FROM THE BATCH PLANT. DRUM ROTATIONS WILL BE THREE HUNDRED OR LESS. TEMPERATURE WILL BE EIGHTY DEGREES OR LESS. ALTERNATIVE METHODS WILL BE PROPOSED PROVIDED THAT SUCH ALTERNATIVE METHODS ARE AT CONTRACTORS' SOLE COST AND IN FULL COMPLIANCE WITH ALL REQUIREMENTS OF LAW AND INDUSTRY STANDARDS.

Z. CONTRACTOR TO PROVIDE DE-WATERING OF FOUNDATIONS AS NEEDED.

1.14 METALS

A. ALL METAL WORK SHALL BE IN ACCORDANCE WITH THE SPECIFICATION GALVANIZED ASTM A572 UNLESS OTHERWISE NOTED.

B. STRUCTURAL TUBING MEMBERS SHALL CONFORM TO ASTM A500, GRADE B.

C. ALL WELDING SHALL BE DONE USING E70XX ELECTRODES AND WELDING SHALL CONFORM TO AISC AND AWS D1.1. WHERE FILLET WELD SIZES, ARE NOT SHOWN, PROVIDE THE MINIMUM SIZE PER TABLE J2.4 IN THE AISC "MANUAL OF STEEL CONSTRUCTION", 9TH EDITION.

D. BOLTED CONNECTIONS SHALL USE BEARING TYPE GALVANIZED ASTM A325 BOLTS (3/4" DIA.) AND SHALL HAVE A MINIMUM OF TWO BOLTS U.N.O.

E. NON-STRUCTURAL CONNECTIONS FOR HANDRAIL, LADDERS AND STEEL GRATING MAY USE 5/8" DIA. GALVANIZED ASTM A307 BOLTS U.N.O.

F. IF FIELD WELDING IS APPROVED, FOLLOW AWS STANDARDS. SPECIAL INSPECTION IS REQUIRED.

G. ALL WELDING PROCESSES AND WELDING OPERATIONS WILL BE QUALIFIED IN ACCORDANCE WITH AMERICAN WELDING SOCIETY (AWS) STANDARD QUALIFICATION PROCEDURE.

H. SUBMIT 6 SETS OF SHOP DRAWINGS TO THE ARCHITECT/ ENGINEER FOR REVIEW BEFORE FABRICATION/ CONSTRUCTION.

I. ALL EPOXY ANCHORS SHALL USE THE HILTI HIT HY 150 INJECTION ADHESIVE ANCHOR SYSTEM, SIZE AS INDICATED ON THE PLANS, (ICBO #5193, LARR #25257). OR APPROVED EQUAL, SUBJECT TO APPROVAL BY STRUCTURAL ENGINEER OF RECORD.

J. ALL EXPANSION ANCHORS SHALL BE HILTI KB-TZ ANCHORS, SIZE AS INDICATED ON THE PLANS (ESR-1917) OR APPROVED EQUAL. SUBJECT TO APPROVAL BY STRUCTURAL ENGINEER OF RECORD.

K. ON SITE WELDING IS NOT PERMITTED, UNLESS PROVIDED WRITTEN APPROVAL BY [redacted] ANY FIELD WELDING SHALL BE COMPLETED BY A CERTIFIED LICENSED WELDER AND OBSERVED/INSPECTED BY JURISDICTIONAL APPROVED INSPECTOR. ALL WELDS MUST BE TREATED WITH CORROSION RESISTANT PAINT.

L. THE USE OF A36 MODIFIED MATERIAL TO OBTAIN 50 KSI MINIMUM YIELD STRENGTH IS PROHIBITED. UTILIZING MILL CERTIFICATIONS TO OBTAIN MINIMUM YIELD STRENGTHS IS PROHIBITED.

M. THE CONTRACTOR WILL FURNISH ALL MATERIALS TO BE NEW AND OF THE BEST QUALITY AS MEASURED BY THE HIGHEST STANDARDS OF THE TRADE. ALL DEFECTS WILL BE CAUSE FOR REJECTION BY THE AUTHORITY. THE CONTRACTOR WILL HAVE AVAILABLE THE MILL CERTIFICATES FOR ALL MATERIALS FURNISHED AND WILL BE SUBMITTED UPON REQUEST.

1.15 WARRANTIES

A. THE CONTRACTOR SHALL WARRANTY ALL GENERAL WORK FOR A MINIMUM OF 12 MONTHS OR AS STATED ELSEWHERE IN THE CONTRACT.

B. ROOF WARRANTY: ALL WORK ON ROOFS SHALL BE PERFORMED IN FULL COMPLIANCE WITH THE ROOF MANUFACTURER THAT THE WARRANTY REMAINS VALID AFTER CONSTRUCTION IS COMPLETE.

1.16 ANTENNAS AND CABLES

A. THE CONTRACTOR IS RESPONSIBLE FOR THE PROPER STORAGE AND HANDLING OF ALL MATERIALS ONCE THEY HAVE BEEN RELEASED FROM THE WAREHOUSE.

B. INSTALLATION OF ALL MATERIALS SHALL BE DONE IN STRICT ADHERENCE TO MANUFACTURER'S RECOMMENDATIONS INCLUDING. R56 SPEC'S.

C. THE CONTRACTOR SHALL PERFORM THE SWEEP TESTING WITH A WILTRON METAL 350 OR EQUAL, AND PROVIDE TWO COPIES TO [redacted] THE REQUIREMENTS FOR THE TESTING RESULTS WILL BE ISSUED FROM [redacted] PRIOR TO THE START OF THE PROJECT. THE CONTRACTOR IS TO FILL OUT AN ANTENNA SITE SUBMISSION FORM (SEE PART FOUR) AND (1) COMPLETE SWEEP TEST WITH ANTENNA INFORMATION FORM TO BE LEFT INSIDE SHELTER AT SITE.

D. TOWER TECHNICIANS MUST BE CURRENT ANDREWS AND COMMSCOPE CERTIFIED FOR CABLE CONNECTOR INSTALLATIONS. ALL COAX TO BE USED MUST BE ANDREWS OR COMMSCOPE MANUFACTURED

E. THE FOLLOWING TABLE WILL BE USED TO DETERMINE THE MINIMUM RADIUS OF EACH CABLE (VERIFY WITH MANUFACTURER'S SPECIFICATIONS:

ANDREW BENDING RADIUS

DIAM. OF CABLE	LDF#	RADIUS
1/2"	4	5"
7/8"	5	10"
1-1/4"	6	15"
1-5/8"	7	20"
2-1/4"	12	24"

COMMSCOPE BENDING RADIUS

DIAM. OF CABLE	TYPE	RADIUS
1/2"	FXL780	4"
7/8"	FXL780	8"
1-5/8"	FXL780	15"

F. THE CONTRACTOR SHALL RUN ALL LINES AND CONDUITS IN A NEAT, ORDERLY AND STRAIGHT FASHION PROVIDING ANCHORING AS RECOMMENDED BY THE MANUFACTURER AND/ OR STRUCTURAL ANALYSIS RECOMMENDATIONS TO SUPPORT THE LINES PROPERLY.

G. THE CONTRACTOR WILL ROUTE ALL POWER, SIGNAL, AND TRANSMISSION LINE CABLES ACCORDING TO [redacted] SITE INSTALLATION, GROUNDING, AND LIGHTNING PROTECTION GUIDELINES. CABLES WILL BE APPROPRIATELY SEPARATED BASED ON TYPE TO PREVENT INTERFERENCE.

H. ALL EQUIPMENT WILL PRESENT A NEAT SYMMETRICAL APPEARANCE AND BE INSTALLED IN A HIGHLY STABLE AND RIGID MANNER MEETING LOCAL AND ZONE 4 SEISMIC REQUIREMENTS.

I. THE CONTRACTOR TO PROVIDE ALL REQUIRED CRANES, MANPOWER, VEHICLES AND PERMITS TO SUPPORT INSTALLATION.

1.17 ELECTRICAL

A. THE CONTRACTOR IS RESPONSIBLE FOR ALL PERMITTING, FILING, AND FEES IN CONJUNCTION WITH THE PROJECT.

B. THE CONTRACTOR SHALL SCHEDULE ALL NECESSARY INSPECTIONS WITH THE PROPER AUTHORITIES AND INFORM [redacted] 24-HOURS IN ADVANCE. ALL TICKETS AND INSPECTION VERIFICATIONS WILL BE SUBMITTED TO [redacted] WITHIN THE CLOSEOUT PACKAGE.

C. ALL LABOR AND MATERIAL SHALL CONFORM TO ALL LOCAL, STATE, AND NATIONAL CODES, RULES, REGULATIONS AND STANDARDS.

D. ALL EQUIPMENT, WIRING, AND MATERIALS MUST HAVE A UL LABEL AND INSTALLED PER MANUFACTURER SPECIFICATIONS.

E. ALL WORK SHALL BE DONE BY QUALIFIED AND EXPERIENCED JOURNEYMEN AND PERFORMED IN A WORKMANLIKE MANNER AND SHALL PROCEED IN AN ORDERLY MANNER SO AS NOT TO HOLDUP THE PROGRESS OF THE PROJECT.

F. CONTRACTOR TO VERIFY ALL LINES, FEEDERS, EQUIPMENT, AND DEVICES INSTALLED PER CD'S TO ASSURE PROPER OPERATION (PER NEC NFPA 70) PRIOR TO GENERATOR START UP.

G. CONDUITS AND FITTINGS FOR OUTSIDE/ABOVE GROUND APPLICATIONS SHALL BE RIGID CONDUIT AND FITTINGS FOR INSIDE BUILDING RUNS, ABOVE CEILINGS SHALL BE EMT. SUPPORT ALL CONDUITS WITHIN 3 FT. OF ALL JUNCTION BOXES AND AT 8 FT. INTERVALS OR LESS AS NEEDED WITHIN APPROVED ANCHORING DEVICES. ALL CONNECTORS AND COUPLINGS SHALL BE OF THREADED OR COMPRESSION TYPE.

1.17 ELECTRICAL (CONTINUE:)

H. ALL WIRES SHALL BE COPPER; USE OF ALUMINUM CONDUCTORS WILL NOT BE PERMITTED. SEE ELECTRICAL PLANS FOR SIZING AND LOCATIONS. USE PROPER SIZE CONNECTORS PER LOCAL, STATE, AND NATIONAL CODES.

I. CONDUCTOR LENGTHS SHALL BE CONTINUOUS FROM TERMINATION TO TERMINATION WITHOUT SPLICES.

J. PROVIDE PULL BOXES WHERE SHOWN AND WHERE REQUIRED BY CODES AND UTILITY COMPANIES.

K. ALL CONDUIT ROUTES SHALL BE COORDINATED WITH THE MECHANICAL EQUIPMENT TO AVOID LOCATION CONFLICTS. CONTRACTOR SHALL VERIFY ALL LOCATIONS.

L. ALL CONDUITS SHALL BE TAGGED/IDENTIFFIED INSIDE ALL PULL BOXES, J-BOXES, AND CABINETS WITH P-TOUCH TYPE PRINTED LABELS. (1/2" LABEL, WHITE FACE WITH BLACK LETTERING)

M. ALL BREAKERS IN LOAD CENTER SHALL BE IDENTIFIED WITH TYPE WRITTEN LABELS NEATLY PLACED ALONG SIDE OF THE BREAKER.

N. ALL GROUND BARS SHALL BE 4"x1/4"x LENGTH AS NOTED, UNLESS OTHERWISE NOTED AND SHALL BE COPPER AND LARGE ENOUGH TO ACCOMMODATE THE REQUIRED NUMBER OF GROUNDING CONNECTIONS. THE HARDWARE SECURING ALL GROUND BARS SHALL BOND THEM TO THE STRUCTURE TO WHICH THEY ARE FASTENED. ALL FASTENERS SHALL BE STAINLESS STEEL. COPPER SHALL NOT MAKE PHYSICAL CONTACT TO GALVANIZED STEEL STRUCTURE. DOUBLE STACKING LUGS OR "SANDWICHING" NOT PERMITTED.

O. ANY PENETRATIONS MADE BY THE CONTRACTOR THROUGH WALLS, CEILINGS, FLOORS, ROOFS OR ANY OTHER SURFACE SHALL BE CORE DRILLED AND SEALED ACCORDING TO EXISTING FIRE RATING. CONTRACTOR IS RESPONSIBLE TO FIELD VERIFY. REFER TO LOCAL JURISDICTION CODES IF APPLICABLE.

P. THE MATERIALS AND EQUIPMENT INFORMATION ON THESE DRAWINGS ARE BASED ON THE BEST AVAILABLE INFORMATION AT THE TIME THE DRAWINGS ARE ISSUED. CHANGES MAY OCCUR, AND THE CONTRACTOR SHALL VERIFY ALL ITEMS PRIOR TO PLACEMENT, AND MAKE ANY CORRECTIONS WITHOUT FURTHER COST TO [redacted]

Q. ALL EXTERIOR & ABOVE GROUND CONDUITS SHALL BE RIGID GALVANIZED STEEL.

R. ALL CONTRACTORS ARE REQUIRED TO INITIATE COORDINATION WITH EXISTING FACILITY FM DEPARTMENT AND COMPLY WITH ALL LOCAL REQUIREMENTS FOR EACH FACILITY AND IN ACCORDANCE WITH CAL-OSHA GUIDELINES.

1.18 GROUNDING

A. THE CONTRACTOR SHALL VERIFY WITH [redacted] THAT ALL CONDUIT SYSTEMS., EQUIPMENT, DEVICES, PANELS, LINES, TRAYS, BRIDGES, PLATFORMS, AND ANY/ ALL ITEMS ARE GROUNDED PROPERLY PER R56 SPECS.

B. THE GROUNDING SYSTEM CONNECTIONS SHALL BE MADE WITH EXOTHERMIC WELDS AND/ OR MECHANICAL TWO-LUG COMPRESSION CONNECTORS AS INDICATED ON PLANS. USE ONLY STAINLESS STEEL SCREWS, BOLTS, WASHERS, AND NUTS FOR FASTENING. ALL FASTENERS SHALL BE STAINLESS STEEL. COPPER SHALL NOT MAKE PHYSICAL CONTACT TO GALVANIZED STEEL STRUCTURE.

C. CLEAN SURFACES THOROUGHLY BEFORE APPLYING GROUND LUGS OR CLAMPS. IF SURFACE IS COATED, THE COATING MUST BE REMOVED DOWN TO THE BARE METAL. AFTER THE COATING HAS BEEN REMOVED, APPLY A NON-CORROSIVE APPROVED COMPOUND TO THE CLEANED SURFACE AND INSTALL LUGS OR CLAMPS. WHERE GALVANIZING IS REMOVED FROM METAL, IT SHALL BE PAINTED OR TOUCHED UP WITH COLD GALVANIZING PAINT SUCH AS GALVAX OR EQUAL.

D. ALL CLAMPS, SLEEVES, AND SUPPORTS USED TO SUPPORT OR CHANNEL THE GROUNDING SYSTEM CONDUCTORS SHALL BE SCHEDULE 80 PVC. DO NOT USE METAL BRACKETS OR SUPPORTS THAT WOULD FORM A COMPLETE RING AROUND ANY GROUNDING CONDUCTOR.

E. ALL MECHANICAL GROUNDING CONNECTIONS SHALL BE COATED WITH GENERIC COPPER SHIELD ANTI-CORROSIVE AGENT. NO SUBSTITUTIONS ARE PERMITTED. VERIFY THE PRODUCT WITH [redacted] PRIOR TO USAGE.

F. GROUND, CABLE TRAYS AND RACKS, AND ANY OTHER METALLIC COMPONENTS WITH #2 GROUNDING CONDUCTORS, AND CONNECT TO THE SURFACE-MOUNTED GROUND BARS. CONNECTION DETAILS SHALL BE PERFORMED PER THE MANUFACTURER'S SPECIFICATIONS AND RECOMMENDATIONS UNLESS OTHERWISE SPECIFIED.

G. CLAMP-ON RESISTANCE OR INDUCED FREQUENCY TESTS WITH CLAMP-ON GROUND RESISTANCE TESTER.

H. THE ANTENNA CABLES SHALL BE GROUNDED AT THE TOP AND BOTTOM OF THE VERTICAL RUN FOR LIGHTNING PROTECTION. THE ANTENNA CABLE SHALL BE BONDED TO A COPPER GROUND BAR AT THE LOWER MOST POINT OF A VERTICAL RUN JUST BEFORE IT BEGINS TO BEND TOWARD THE HORIZONTAL PLANE. WIRE RUNS TO GROUND SHALL BE KEPT AS STRAIGHT AND SHORT AS POSSIBLE. THE ANTENNA CABLE SHALL BE GROUNDED JUST BEFORE ENTERING THE SHELTER/EQUIPMENT. ANY TOWERS WITH MULTIPLE BROADCAST TRANSMITTERS PRESENT AND OVER 200 FEET SHALL ALSO BE EQUIPPED WITH ADDITIONAL GROUNDING AT EQUAL INTERVALS.

I. THE CONTRACTOR, UPON COMPLETION OF THE GROUNDING SYSTEM, SHALL SCHEDULE A TEST OF THE SYSTEM. [redacted] REPRESENTATIVE WILL BE INFORMED 48 HOURS IN ADVANCE OF THE TEST.

J. WHEN USING OR CONNECTING TO AN EXISTING GROUND RING. TEST GROUND RING PRIOR TO AND AFTER CONNECTION TO THE EXISTING GROUND RING.

LA-RICS
Los Angeles Regional Interoperable Communications System

[redacted]

GENERAL NOTES
GN3

[redacted]

NOTE: ALL INFORMATION IS SUBJECT TO FIELD VERIFICATION. ALL INFORMATION IS CONFIDENTIAL AND NOT FOR PUBLIC DISTRIBUTION WITHOUT EXPRESS CONSENT OF THE LOS ANGELES REGIONAL INTEROPERABLE COMMUNICATIONS SYSTEMS AUTHORITY.

1.19 DIGGING AND SPILLS:

A. COMPLETE ALL BELOW GRADE TOWER/PAD FOUNDATION, GROUNDING AND CONDUITS FIRST AND REPAIR TO MINIMIZE EROSION AND MUD WASH. (IF APPLICABLE)

B. CONTRACTOR RESPONSIBLE TO CONTACT DIG ALERT, POWER COMPANY AND OTHERS TO OBTAIN UNDERGROUND CLEARANCE TO DIG. CONTRACTOR RESPONSIBLE FOR PRIVATE GROUND PENETRATING RADAR SURVEYS (AS REQUIRED).

C. HAND DIGGING MAY BE REQUIRED FOR THE ICE BRIDGE POSTS NEAR OTHER SERVICES. PLAN ACCORDINGLY.

D. DUST, EROSION AND SPILL MITIGATION REQUIRED THROUGHOUT THE ENTIRE PROCESS USING BEST BUSINESS PRACTICES. ALL ENVIRONMENTAL, EROSION PLANS AND SAFETY LAWS TO BE ADHERED TO AT ALL TIMES.

E. CONTRACTOR TO PROVIDE SILT FENCING AROUND PROJECT WORK AREA TO PREVENT EROSION. REMOVE AND DISPOSE OF AT THE END OF THE PROJECT. (IF APPLICABLE)

F. ANY DISTURBED SOIL/VEGETATION MUST BE RETURNED TO PRE-CONSTRUCTION CONDITION.

G. CONTRACTOR TO CONSTRUCT A TEMPORARY CONCRETE WASHOUT. DEMO AND DISPOSE OF HARDENED CONCRETE AND RESTORE AREA TO ORIGINAL STATE. (IF APPLICABLE)

H. 24HR NOTICE TO GDIT ON OPEN TRENCHES, CONCRETE POURS, ETC.

I. BACKFILL TRENCHES AS CALLED OUT ON THE DRAWINGS OR PER THE UTILITY COMPANY'S CODE. RESTORE ALL DISTURBED AREAS WITH STRAW & SEED. INCLUDE IN TRENCHING COSTS. (IF APPLICABLE)

J. HAUL OFF AND PROPERLY DISPOSE OF EXTRA DIRT/MATERIALS FROM FOUNDATIONS IF IT CAN NOT BE USED ON SITE.

PART 2 – PRODUCTS

2.1 GENERAL

A. GENERAL REQUIREMENTS: ALL MATERIALS AND EQUIPMENT SHALL BE IN ACCORDANCE WITH CONTRACT DOCUMENTS AND STANDARD PRODUCTS OF THE VARIOUS MANUFACTURERS, WITH ALL MATERIALS AND EQUIPMENT TO BE NEW, CLEAN, UNDAMAGED, AND FREE OF DEFECTS AND CORROSION.

B. ACCEPTABLE PRODUCTS: THE PRODUCT OF SPECIFIED OR APPROVED MANUFACTURER WILL BE ACCEPTABLE ONLY WHEN THE PRODUCT MEETS QA REQUIREMENTS.

C. COMMON ITEMS: WHERE MORE THAN ONE OF ANY SPECIFIC ITEM IS REQUIRED, ALL SHALL BE OF THE SAME TYPE AND MANUFACTURER.

D. UL LISTING: ALL MATERIALS AND EQUIPMENT SHALL BE UNDERWRITERS LABORATORIES (UL) LISTED AND LABELED, WHERE UL STANDARDS AND LISTINGS EXIST FOR SUCH MATERIALS OR EQUIPMENT.

2.2 GROUNDING

A. RACEWAY SIZING: AS REQUIRED BY NEC (MINIMUM) WITH OVERSIZED RACEWAYS AS INDICATED ON DRAWINGS. MINIMUM CONDUIT SIZE: 3/4 INCH, UNLESS INDICATED OTHERWISE.

B. RACEWAY TYPES: RIGID GALVANIZED STEEL CONDUIT, ELECTRICAL METALLIC TUBING (EMT), FLEXIBLE STEEL CONDUIT, LIQUID-TIGHT FLEXIBLE STEEL CONDUIT, SCHEDULE 40 HEAVY WALL, AND SCHEDULE 80 EXTRA HEAVY WALL RIGID NONMETALLIC.

C. FITTINGS: ALL RACEWAY FITTINGS (EXCEPT FOR RIGID NONMETALLIC CONDUIT) TO BE STEEL OR MALLEABLE IRON, AND UL LISTED FOR THE INTENDED APPLICATION. EMT FITTING TO BE COMPRESSION TYPE.

D. OUTLET BOXES (SURFACE MOUNTED): CADMIUM PLATED CAST OR MALLEABLE IRON.

E. PULL AND JUNCTION BOXES AND WIREWAYS: USE AS INDICATED AND REQUIRED. JUNCTION BOXES FOR GENERAL INDOOR USE (DRY LOCATIONS) TO BE OF GALVANIZED CODE GAUGE STEEL CONSTRUCTION MINIMUM 4" SQUARE x 1-1/2" DEEP WITH SCREW-ON COVERS. WIREWAYS TO BE UL LISTED, SHEET STEEL CONSTRUCTION WITH SCREW-ON COVERS. FOR EXTERIOR AND DAMP OR WET INDOOR LOCATIONS, USE BOXES AND WIREWAYS APPROVED FOR SUCH USE.

F. PIPE SLEEVES: RIGID STEEL CONDUIT OR IRON PIPE.

G. CONDUIT SEALS FOR CAST-IN-PLACE CONCRETE APPLICATIONS-ACCEPTABLE MANUFACTURERS: O-Z/ GEDNEY TYPE "FSK"; THUNDERLINE CORPORATION "LINK SEAL" WITH "LINK SEAL WITH SLEEVE" FOR CORE-DRILLED AND PRE-CAST OPENING APPLICATIONS-ACCEPTABLE MANUFACTURERS: O-Z/ GEDNEY TYPE "CSML"; THUNDERLINE CORPORATION "LINK SEAL".

H. SWEEPS: ALL SWEEPS FOR COMMUNICATION EQUIPMENT OR CONCRETE PAD SHALL BE MIN. 24" RADIUS.

2.3 CONDUCTORS – 600 VOLT AND BELOW

A. GENERAL: SINGLE-CONDUCTOR 98% CONDUCTIVITY, ANNEALED, NON-COATED COPPER CONDUCTORS WITH 600-VOLT RATED TYPE "THHN/ THWN " INSULATION.

B. CONNECTORS: NYLON SHELL INSULATED METALLIC SCREW-ON CONNECTORS FOR #14-#10 AWG, AND BOLTED PRESSURE OR COMPRESSION TYPE LUGS AND CONNECTORS WITH INSULATING COVERS FOR #8 AWG AND LARGER.

2.4 HANGERS AND SUPPORTS

A. GENERAL: ALL HANGERS, SUPPORTS, FASTENERS AND HARDWARE SHALL BE HOT DIPPED GALVANIZED OR EQUIVALENT CORROSION RESISTANCE BY TREATMENT, AND SHALL BE MANUFACTURED PRODUCTS DESIGNED FOR THE APPLICATION.

B. TYPES: HANGERS, STRAPS, RISER SUPPORTS, CLAMPS, U-CHANNEL, THREADED RODS, ETC. AS INDICATED OR REQUIRED.

2.5 ELECTRICAL IDENTIFICATION

A. NAME PLATES: LAMINATED PLASTIC WITH MINIMUM 1/4" HIGH BLACK ENGRAVED CHARACTERS ON WHITE BACKGROUND.

B. FASTENERS: DOUBLE SIDED 3/4" ADHESIVE TAPE.

C. UNDERGROUND WARNING TAPE: SIX-INCH WIDE POLYETHYLENE TAPE. PERMANENTLY BRIGHT COLORED WITH CONTINOUS-PRINTED LEGEND INDICATING GENERAL TYPE OF UNDERGROUND LINE BELOW AND "CAUTION". COLORS AS FOLLOWS:

1. RED = ELECTRIC
2. ORANGE = COMMUNICATIONS

D. MARKING PENS: PERMANENT, WATERPROOF, QUICK DRYING BLACK INK. ACCEPTABLE MANUFACTURERS: SANFORD FINE POINT "SHARPIE", OR EQUAL.

E. WIRE TAGS: VINYL OR VINYL-CLOTH SELF-ADHESIVE WRAPAROUND TYPE INDICATING APPROPRIATE CIRCUIT NUMBER, ETC.

2.6 ENCLOSURES

A. DRY LOCATION, INDOOR – NEMA 1.

B. WET LOCATION OR OUTDOOR – NEMA 3R.

C. OTHER – IF APPROVED, 5000 FT. AMSL SITE, HIGH BERAT – NEMA 4R

2.7 GROUNDING

A. SYSTEM DESCRIPTIONS: GROUNDING NETWORK SYSTEM SHALL ESTABLISH AN EARTH-RESISTANCE TO THE REFERENCE GROUND POINT NOT TO EXCEED 5 OHMS FOR BUILDING, CONSISTING OF BONDING OF STRUCTURE AND OTHER METAL OBJECTS INCLUDING GROUNDING ELECTRODES AND INTERCONNECTING CONDUCTORS. THIS SHALL BE PERFORMED WITH CLAMP-ON RESISTANCE OR INDUCED FREQUENCY TEST W/ CLAMP ON GROUND RESISTANCE TESTER.

B. MATERIALS-INDICATED AS FOLLOWING:

1. WATER SERVICE METALLIC PIPE
2. BUILDING STEEL
3. CONDUCTORS: COPPER STRANDED OR SOLID TINNED BARE SIZE AS INDICATED
4. GROUND RODS: 5/8" DIA. x 10'-0" LONG COPPER CLAD GROUND ROD
5. CHEMICAL GROUND RODS: XIT GROUND ROD 10'-0" STRAIGHT SHAFT TYPE
6. COMPRESSION: HYGROUND AS MANUFACTURED BY FCI BURNDY. CONNECTIONS SHALL BE PROTECTED FROM CORROSION AS MANUFACTURED BY ZRC CHEMICAL PRODUCTS CO., AS NEEDED.
7. CONNECTIONS: DOUBLE HOLE LUGS FOR ALL MECHANICAL CONNECTIONS
8. EXOTHERMIC: EXOTHERMIC WELD WITH PROPER MOLDS

2.8 SAFETY SWITCHES

A. GENERAL: HEAVY DUTY HORSEPOWER RATED, FULLY ENCLOSED, FUSIBLE (WITH REJECTION FUSE CLIPS) OR NON-FUSED AS INDICATED, QUICK-MAKE, QUICK BREAK SWITCHING MECHANISM INTERLOCKED WITH COVER AND NEMA 1 ENCLOSURE FOR DRY LOCATIONS, AND NEMA 3R ENCLOSURE FOR OUTDOOR LOCATIONS, UNLESS INDICATED OTHERWISE. SWITCHES TO BE LABELED AS "SUITABLE FOR USE AS SERVICE ENTRANCE EQUIPMENT", WHERE REQUIRED.

B. RATINGS: VOLTAGE, PHASES, AMPERAGES, AND FUSING AS INDICATED.

2.8 SAFETY SWITCHES (CONTINUE)

C. IN THE FUSED CONFIGURATION, SWITCHES SHALL HAVE THE INTERRUPTING CAPACITY OF AT LEAST 100,000 AMPS SYMMETRICAL AT SIX HUNDRED (600) VOLTS WHEN USED WITH CLASS RK5 TIME DELAY CURRENT LIMITING FUSES, AND 200,000 AMPS SYMMETRICAL AT 600 VOLTS WHEN USED WITH RK1 CURRENT LIMITING FUSES.

D. LINE SHIELD GUARDS TO PREVENT CONTACT WITH LIVE PARTS.

E. CONTACTS: SILVER ALLOY: SWITCH BLADES SHALL BE DE-ENERGIZED IN THE OPEN POSITION.

F. LUGS: COMPRESSION 2 HOLE LUGS TO BE USED. INDOOR: WITH INSPECTION WINDOW AND COLOR COORDINATED HEAT SHRINK. OUTDOOR: WITHOUT INSPECTION WINDOW AND COLOR COORDINATED UV RATED HEAT SHRINK.

G. REJECTION FUSE CLIPS: PROVIDE FOR FUSIBLE SWITCHES (30-600A) TO PREVENT INSTALLATION OF CLASS H AND CLASS K NON-CURRENT, LIMITING FUSES.

H. ACCEPTABLE MANUFACTURERS: GENERAL ELECTRIC, SQUARE D TYPE QC, SIEMENS.

2.9 FUSES

A. UL CLASS RK1, 250 VOLT OR 600 VOLT AS REQUIRED FOR SYSTEM VOLTAGE, DUAL ELEMENT, TIME DELAY CURRENT-LIMITING, 200,000 A/C, AMPERE RATINGS AS INDICATED. SIZE AND QUANTITY AS INDICATED ON POWER DIAGRAM.

B. ACCEPTABLE MANUFACTURERS: BUSSMAN "FUSETRON", OR EQUAL BY FERRAZ SHAWMUT.

2.10 CIRCUIT BREAKERS

A. GENERAL: MOLDED CASE WITH THERMAL AND MAGNETIC TRIPS UNLESS INDICATED OTHERWISE. MINIMUM 10,000 AMPS INTERRUPTING CAPACITY, HIGHER RATINGS AS INDICATED OR REQUIRED BY AVAILABLE FAULT CURRENT.

B. CIRCUIT BREAKERS FOR EXISTING EQUIPMENT SHALL BE FROM THE SAME MANUFACTURER AS THE ORIGINAL EQUIPMENT.

2.11 LOAD CENTER/ PANEL BOARDS

A. GENERAL: TWO-ROW CIRCUIT BREAKER WITH MAINS, RATINGS AND BRANCH DEVICES AS INDICATED.

B. MINIMUM 10,000 A/C FOR 208V/ 240V UNLESS OTHERWISE NOTED.

C. LOCKABLE OVER, COPPER BUS.

D. LOAD CENTER SHALL HAVE MAIN CIRCUIT BREAKER (LOCKABLE IN ON & OFF POSITIONS).

E. COPPER GROUND BARS (ALUMINUM COMPONENTS IN ELECTRICAL DEVICES PROHIBITED). ISOLATED NEUTRAL BUS AND FULL SIZE GROUNDING BUS.

F. ACCEPTABLE MANUFACTURERS: GE, SQUARE D TYPE QC, SEIMENS, OR EQUIVALENT.

2.12 DEVICES

A. SWITCHES: 20 AMP, 120-277 VOLTS, A.C. ONLY TOGGLE TYPE, SINGLE POLE, DOUBLE POLE, 3-WAY, OR 4-WAY TIMER STYLE AS INDICATED OR REQUIRED.

B. RECEPTACLES: 20 AMP, 120V, NEMA 5 208V DUPLEX TYPE, FOR INDOOR MOUNTED, USE STAINLESS STEEL COVER. FOR OUTDOOR OR WET LOCATION MOUNTED. USE DEVICE RATED FOR USE. PROVIDE GFCI TYPE WITH SOLID STATE GROUND FAULT SENSING & 6 MA TRIP FOR OUTDOOR OR WET LOCATIONS.

C. AUXILIARY POWER (GENERAL INLET): PROVIDE 3-POLE, 4W, 125/250 VOLT FLANGED INLET, BACKBOX AND CLOSURE PLUG AT EXTERIOR OF BUILDING WALL (APPLETON #AJA2003-200RS WITH MATCHING BACKBOX AND CLOSURE PLUG.)

2.13 CABLE TRAY

A. PROVIDE A COMPLETE CABLE TRAY SYSTEM WITH BENDS, FITTINGS, ACCESSORIES, ETC. AS REQUIRED.

B. DESCRIPTION: ALUMINUM ALLOY CONSTRUCTION. TYPE: LADDER WITH 12" MAXIMUM SPACING. DEPTH: MINIMUM 4". WIDTH: AS INDICATED ON DRAWINGS, (MINIMUM 12" HORIZONTAL RUNS, MINIMUM 6" VERTICAL RUNS). SUPPORT SPAN: 8 FOOT MINIMUM, UNLESS OTHERWISE NOTED. LOADING: 300 POUNDS/ FOOT. RADIUS: 36" MINIMUM, (SMALLER RADIUS MAY BE PERMITTED IF APPROVED BY GENERAL DYNAMICS / MOTOROLA). COVER: VENTILATED .063 ALUMINUM, PROVIDE WHERE INDICATED.

C. ACCEPTABLE MANUFACTURERS: PW INDUSTRIES, B-LINE, COPE, OR EQUAL

2.14 SURGE SUPPRESSION

A. PRODUCTS MANUFACTURED BY ATLANTIC SCIENTIFIC OR EQUAL

B. FURNISHED BY AND INSTALLED BY CONTRACTOR.

NOTE: ALL INFORMATION IS SUBJECT TO FIELD VERIFICATION. ALL INFORMATION IS CONFIDENTIAL AND NOT FOR PUBLIC DISTRIBUTION WITHOUT EXPRESS CONSENT OF THE LOS ANGELES REGIONAL INTEROPERABLE COMMUNICATIONS SYSTEMS AUTHORITY.

LA-RICS
Los Angeles Regional Interoperable Communications System

GENERAL NOTES
GN4

PART 3 – EXECUTIONS

3.1 GENERAL

A. THE INSTALLATION OF ALL WORK SHALL BE IN ACCORDANCE WITH THE INTENT OF THE CONTRACT DOCUMENTS.

B. INSTALLATION REQUIREMENTS: ALL MATERIALS AND EQUIPMENT SHALL BE INSTALLED AS RECOMMENDED BY THE RESPECTIVE MANUFACTURERS, BY MECHANICS EXPERIENCED AND SKILLED IN THEIR TRADE, IN A NEAT AND WORKMANLIKE MANNER IN ACCORDANCE WITH THE STANDARDS OF THE TRADE, AND SO AS NOT TO VOID ANY WARRANTY OF UL LISTING.

C. ADMINISTRATION AND SUPERVISION: ALL WORK SHALL BE PERFORMED UNDER THE CONTRACTOR'S DIRECT SUPERVISION, USING SUFFICIENT AND QUALIFIED PERSONNEL AS NECESSARY TO COMPLETE THE WORK IN ACCORDANCE WITH THE PROGRESS SCHEDULE. THE CONTRACTOR SHALL ASSIGN ONE OR MORE COMPETENT SUPERVISORS WHO SHALL HAVE AUTHORITY TO ACCEPT AND EXECUTE ORDERS AND INSTRUCTIONS, AND WHO SHALL COOPERATE WITH THE CONTRACTORS, THE ENGINEER, AND [redacted] IN ALL MATTERS TO RESOLVE CONFLICTS AND AVOID DELAYS.

D. MINIMUM MOUNTING HEIGHT: INSTALL EXPOSED RACEWAY AND ALL OTHER EQUIPMENT (EG, LIGHTING FIXTURES) WITH NOT LESS THAN 7'–6" CLEAR TO FINISHED FLOOR, UNLESS INDICATED OR APPROVED OTHERWISE, AND EXCLUDING RACEWAY AND EQUIPMENT MOUNTED ON WALLS. MAINTAIN SAFE LAYOUT WITH MINIMUM HEAD ROOM UNLESS ACCESS IS LIMITED.

E. DIMENSIONS AND CLEARANCES: FIELD MEASURE ALL DIMENSIONS AND CLEARANCES AFFECTING THE INSTALLATION OF ELECTRICAL WORK, IN RELATION TO ESTABLISHED DATUM, BUILDING OPENINGS AND CLEARANCES, AND WORK OF OTHER TRADES, AS CONSTRUCTION PROGRESSES.

3.2 EXAMINATION

A. CONDITION VERIFICATION: EXAMINE THE AREAS AND CONDITIONS UNDER WHICH THE WORK IS TO BE PERFORMED, AND IDENTIFY ANY CONDITIONS DETRIMENTAL TO THE PROPER AND TIMELY COMPLETION OF THE WORK. NOTIFY [redacted] OF FINDINGS WITHIN 24HRS. DO NOT PROCEED UNTIL UNSATISFACTORY CONDITIONS HAVE BEEN CORRECTED.

3.3 COORDINATION

A. GENERAL: SEQUENCE, COORDINATE AND INTEGRATE THE INSTALLATION OF ALL MATERIALS AND EQUIPMENT FOR EFFICIENT FLOW OF WORK, IN CONJUNCTION WITH THE OTHER TRADES. REVIEW THE DRAWINGS FOR WORK OF THE OTHER TRADES, AND REPORT AND RESOLVE ANY DISCOVERED DISCREPANCIES, PRIOR TO COMMENCING WORK.

B. COOPERATION: COOPERATE WITH THE OTHER CONTRACTORS AND INDIVIDUAL DISCIPLINES FOR PLACEMENT, ANCHORAGE, AND ACCOMPLISHMENT OF THE WORK. RESOLVE INTERFERENCE BETWEEN WORK OF OTHER DISCIPLINES OR CONTRACTORS PRIOR TO COMMENCING INSTALLATION.

C. SUPPORTS AND SLEEVES: COORDINATE THE INSTALLATION OF REQUIRED SUPPORTING DEVICES AND SLEEVES TO BE SET IN POURED–IN–PLACE CONCRETE AND OTHER STRUCTURAL COMPONENTS, AS THEY ARE CONSTRUCTED.

D. OBSTACLES AND INTERFERENCE: WHEN INSTALLING EQUIPMENT AND RACEWAYS, PROVIDE OFFSETS, FITTINGS, ACCESSORIES, AND CHANGES IN ELEVATION OR LOCATION AS NECESSARY TO AVOID OBSTACLES AND INTERFERENCE, PER ACTUAL FIELD CONDITIONS.

3.4 EQUIPMENT PROTECTION

A. PROTECT ALL EQUIPMENT, MATERIALS, AND WORK FROM THE WEATHER ELEMENTS, PAINT, MORTAR, CONSTRUCTION DEBRIS AND DAMAGE, UNTIL PROJECT IS SUBSTANTIALLY COMPLETE. REPAIR, REPLACE, CLEAN AND RETURN TO ORIGINAL CONDITION ALL DAMAGED AREAS, EQUIPMENT, UTILITIES, ETC., AND WORK SO AFFECTED.

3.5 LAYOUT

A. GENERAL: INSTALL MATERIALS AND EQUIPMENT LEVEL AND PLUMB, AND PARALLEL AND PERPENDICULAR TO OTHER BUILDING SYSTEMS AND COMPONENTS, WHERE INSTALLED EXPOSED.

B. SERVICEABILITY: INSTALL EQUIPMENT AND RACEWAYS, ETC. TO READILY FACILITATE SERVICING, MAINTENANCE, AND REPAIR OR REPLACEMENT OF COMPONENTS, AND SO AS TO MINIMIZE INTERFERENCE WITH OTHER EQUIPMENT AND INSTALLATIONS.

C. CLEARANCE: PRIOR TO COMMENCING WORK, VERIFY THAT ALL EQUIPMENT WILL ADEQUATELY FIT AND CONFORM TO THE INDICATED AND CODE REQUIRED CLEARANCES, IN THE SPACES INDICATED ON THE DRAWINGS. IF REARRANGEMENT IS REQUIRED, SUBMIT PLAN AND ELEVATION DRAWINGS OR SKETCHES INDICATING REARRANGEMENT, FOR THE ENGINEER'S APPROVAL. DO NOT REARRANGE WITHOUT EXPRESSED WRITTEN PERMISSION OF THE ENGINEER.

D. RIGHT–OF–WAY: WHEN LAYING OUT WORK, GIVE FIRST PRIORITY TO COMMUNICATIONS WIRING, AND NEXT PRIORITY TO STEAM AND CONDENSATE LINES, SANITARY LINES, DRAIN LINES, FIRE PROTECTION PIPING, AND SHEET METAL DUCT WORK. PROVIDE OFFSETS AS REQUIRED TO AVOID CONFLICTS. RESOLVE ALL CONFLICTS BEFORE COMMENCING INSTALLATION.

3.6 MOUNTING HEIGHTS

A. GENERAL: INDICATED HEIGHTS AREA MEASURED FROM THE CENTER OF THE DEVICE OUTLET BOX TO THE FINISHED FLOOR OR GRADE, UNLESS INDICATED OTHERWISE.

B. DEVICES: SWITCHES – 48" A.F.F. / RECEPTACLES – 18" A.F.F. / THERMOSTAT – 48" A.F.F.

3.7 HOLES SLEEVES AND OPENINGS

A. GENERAL: PROVIDE ALL HOLES, SLEEVES, AND OPENINGS REQUIRED FOR THE COMPLETION OF WORK AND RESTORE ALL DAMAGED SURFACES TO MATCH SURROUNDING SURFACES. MAINTAIN INTEGRITY OF ALL FIRE AND SMOKE RATED BARRIERS USING APPROVED FIRE STOPPING SYSTEMS. WHEN CUTTING HOLES OR OPENINGS, OR INSTALLING SLEEVES, DO NOT CUT, DAMAGE OR DISTURB STRUCTURAL ELEMENTS OR REINFORCING STEEL, UNLESS APPROVED IN WRITING BY THE PROJECT STRUCTURAL ENGINEER.

B. CONDUIT PENETRATIONS: SIZE CORE DRILLED HOLES SO THAT AN ANNULAR SPACE OF NOT LESS THAN 1/4" AND NOT MORE THAN 1" IS LEFT AROUND THE CONDUIT. WHEN OPENINGS ARE CUT IN LIEU OF CORE DRILLED, PROVIDE SLEEVE IN ROUGH OPENING. SIZE SLEEVES TO PROVIDE AN ANNULAR SPACE OF NOT LESS THAN 1/4" AND NOT MORE THAN 1" AROUND THE CONDUIT, PIPE, ETC.. PATCH AROUND SLEEVE TO MATCH SURROUNDING SURFACES.

3.8 RACEWAY SYSTEMS

A. UNLESS INDICATED OTHERWISE, USE RACEWAY TYPES AS FOLLOWS:

1. OUTDOORS, EXPOSED: RIGID GALVANIZED STEEL CONDUIT.

2. LIQUID TIGHT FLEXIBLE STEEL CONDUIT: USE WHERE FLEXIBLE STEEL CONDUIT CONNECTIONS ARE REQUIRED IN DRY, DAMP, WET, OR OILY LOCATIONS, FOR CONNECTIONS TO TRANSFORMERS, VIBRATING EQUIPMENT, EQUIPMENT REQUIRING MINOR ADJUSTMENTS IN POSITION, AND FOR FINAL CONNECTIONS TO ALL MOTORS AND SIMILAR EQUIPMENT.

B. RACEWAY ROUTING: AS REQUIRED BY JOB CONDITIONS UNLESS SPECIFIC ROUTES OR DIMENSIONED POSITIONS ARE INDICATED ON THE DRAWINGS. INSTALL TIGHT TO SLAB, BEAMS, AND JOISTS WHEREVER POSSIBLE. ROUTE EXPOSED CONDUIT, AND CONDUIT INSTALLED ABOVE CEILINGS, PARALLEL OR PERPENDICULAR TO WALLS, CEILINGS, AND STRUCTURAL MEMBERS. INSTALL TO MAINTAIN MINIMUM HEADROOM AND TO PRESENT A NEAT APPEARANCE. RUN PARALLEL RACEWAYS TOGETHER WITH BENDS MADE FROM THE SAME CENTERLINE. VERIFY EXACT LOCATIONS OF ALL RACEWAYS, PULL BOXES, AND JUNCTION BOXES. RESOLVE ANY CONFLICTS BEFORE INSTALLATION. DO NOT INSTALL HORIZONTAL CONDUIT RUNS BELOW 7'–6" A.F.F. IN EXPOSED LOCATIONS.

1. DO NOT ROUTE ANY CONDUITS INTO OR THRU, STAIRWAYS, ELEVATOR SHAFTS OR ELEVATOR MACHINE ROOM.
2. CONCEAL CONDUITS ABOVE SUSPENDED CEILINGS WHERE POSSIBLE.
3. COORDINATE ALL CONDUIT STUB UPS WITH ROOF TOP EQUIPMENT LAYOUT.
4. COORDINATE INSTALLATIONS OF CONDUITS, EQUIPMENT, ETC. WITH BUILDING OWNER PRIOR TO COMMENCEMENT OF WORK.

C. RACEWAY INSTALLATION: CUT CONDUIT ENDS SQUARE USING SAW OR PIPE CUTTER AND REAM EACH CUT END SMOOTH. CAREFULLY MAKE ALL CONDUIT BENDS AND OFFSETS SO THAT THE INSIDE DIAMETER OF PIPE IS NOT REDUCED. MAKE BENDS SO THAT LEGS ARE IN THE SAME PLANE. MAKE OFFSETS SO THAT LEGS ARE IN THE SAME PLANE AND PARALLEL PROTECT STUB–UPS FROM DAMAGE, AND CAREFULLY RE–BEND WHEN NECESSARY.

D. FITTINGS: MAKE UP ALL RACEWAY FITTINGS TIGHT SO THAT FINAL INSTALLATION OF RACEWAY, FITTING AND ENCLOSURES CONSTITUTES, A FIRM AND MECHANICAL ASSEMBLY AND A CONTINUOUS ELECTRICAL CONTINUITY. PROVIDE INSULATING BUSHINGS ON CONDUIT TERMINATIONS.

E. PROTECTION: PROTECT ALL RACEWAYS, ENCLOSURES AND EQUIPMENT DURING CONSTRUCTION TO PREVENT ENTRY OF CONCRETE, DEBRIS AND OTHER FOREIGN MATTER. FREE CLOGGED CONDUITS OF ALL OBSTRUCTIONS, OR REPLACE PRIOR TO PULLING WIRE.

F. INSTALL ALL OUTLET PULL AND JUNCTION BOXES RIGIDLY, PLUMB AND LEVEL. SUPPORT AND SECURE BOXES INDEPENDENTLY FROM CONDUITS TERMINATING AT BOX. INSTALL ALL BOXES SO AS TO BE ACCESSIBLE AND SO THAT COVERS MAY BE EASILY REMOVED.

G. PROVIDE CAP TO PREVENT ENTRY OF MATERIALS AND MOISTURE FOR ALL SPARE CONDUITS.

H. CONDUIT SEALS: INSTALL CONDUIT SEAL FOR EACH CONDUIT PENETRATING AT AN EXTERIOR BUILDING WALL, BELOW GRADE (UNLESS PENETRATION IS BELOW LOWEST BUILDING FLOOR SLAB), AND ELSEWHERE AS INDICATED, AND SO AS TO ACHIEVE A SEALED WATERTIGHT INSTALLATION.

3.9 CONDUCTORS – 600 VOLT AND BELOW

A. MINIMUM CONDUCTOR SIZE: ALL BRANCH CIRCUIT WIRING SHALL BE MINIMUM #12 AWG. FEEDER CIRCUIT WIRING SHALL BE MINIMUM #2 AWG UNLESS OTHERWISE NOTED. ALL CONTROL CIRCUIT WIRE SHALL BE MINIMUM #14 AWG, UNLESS INDICATED OTHERWISE. PROVIDE LARGER SIZES, AS INDICATED OR REQUIRED. A FULL SIZED EQUIPMENT GROUNDING CONDUCTOR WILL BE INSTALLED IN POWER AND LIGHTING CONDUITS, (CONDUITS WILL NOT BE USED AS A GROUNDING CONDUIT).

B. IN RACEWAY: INSTALL WIRING IN CONDUIT OR OTHER SPECIFIED RACEWAY, UNLESS INDICATED OTHERWISE. ROMEX, BX, AC AND MC TYPE CABLES ARE NOT ALLOWED.

C. TERMINATIONS: FURNISH AND INSTALL TERMINATIONS INCLUDING LUGS IF NECESSARY TO MAKE ALL ELECTRICAL CONNECTIONS INDICATED OR REQUIRED. EXTERIOR AND SWITCH GEAR TERMINATIONS SHALL HAVE AN ANTIOXIDANT APPLIED. SPRING TYPE WIRE CONNECTORS USED IN EXTERIOR BOXES SHALL BE SILICONE FILLED.

3.10 HANGERS AND SUPPORTS

A. GENERAL: RIGIDLY SUPPORT AND SECURE ALL MATERIALS, RACEWAY AND EQUIPMENT TO BUILDING STRUCTURE USING HANGERS, SUPPORTS AND FASTENERS SUITABLE FOR THE USE, MATERIALS AND LOADS ENCOUNTERED, PROVIDE ALL NECESSARY HARDWARE. PROVIDE CONDUIT SUPPORTS AT MAXIMUM 5 FEET ON CENTER OR PER NEC CODE REQUIREMENTS.

3.10 HANGERS AND SUPPORTS (CONTINUE)

B. OVERHEAD MOUNTING: ATTACH OVERHEAD MOUNTED EQUIPMENT TO STRUCTURAL FRAMEWORK OR SUPPORTING METAL FRAMEWORK. DO NOT MAKE ATTACHMENTS TO STEEL ROOFING, STEEL FLOORING OR CEILING MINERAL TILE.

C. WALL MOUNTING: SUPPORT WALL MOUNTED EQUIPMENT BY MASONRY, CONCRETE BLOCK, METAL FRAMING OR SUB–FRAMING.

D. EXTERIOR WALLS: MOUNT ALL EQUIPMENT LOCATED ON THE EXTERIOR BUILDING WALLS, AT LEAST ONE INCH AWAY FROM WALL SURFACE, USING SUITABLE SPACERS.

E. STRUCTURAL MEMBERS: DO NOT CUT, DRILL OR WELD ANY STRUCTURAL MEMBER EXCEPT AS SPECIFICALLY APPROVED BY THE ENGINEER.

F. INDEPENDENT SUPPORT: DO NOT SUPPORT MATERIALS OR EQUIPMENT FROM OTHER EQUIPMENT, PIPING, DUCTWORK, OR SUPPORTS FOR SAME.

G. TEMPORARY CONDITIONS: DO NOT ATTACH TO OR SUPPORT ELECTRICAL WORK FROM REMOVABLE OR KNOCKOUT PANELS OR TEMPORARY WALLS OR PARTITIONS.

H. RACEWAY SUPPORTS: RIGIDLY SUPPORT ALL RACEWAY WITH MAXIMUM SPACING PER NEC, AND SO AS TO PREVENT DISTORTION OF ALIGNMENT DURING PULLING OPERATION. USE APPROVED HANGERS, CLAMPS, AND STRAPS FOR INDIVIDUAL RUNS. DO NOT USE PERFORATED STRAPS OR TIE WIRES. WHERE MULTIPLE PARALLEL RACEWAYS ARE RUN TOGETHER, USE TRAPEZE TYPE HANGER ARRANGEMENT MADE FROM U–CHANNEL AND ACCESSORIES, SUSPENDED BY THREADED RODS, AND ALLOT AT LEAST 25% SPARE CAPACITY FOR FUTURE INSTALLATION OF ADDITIONAL RACEWAYS. RIGIDLY ANCHOR VERTICAL CONDUITS SERVING FLOOR–MOUNTED OR "ISLAND" TYPE EQUIPMENT MOUNTED AWAY FROM WALL WITH METAL BRACKET OR RIGID STEEL CONDUIT EXTENSION SECURED TO FLOOR.

I. MISCELLANEOUS SUPPORTS: PROVIDE ANY ADDITIONAL STRUCTURAL SUPPORT STEEL BRACKETS, ANGLES, FASTENERS AND HARDWARE AS REQUIRED TO ADEQUATELY SUPPORT ALL ELECTRICAL MATERIALS AND EQUIPMENT.

J. ONE HOLE STRAPS SHALL NOT BE USED FOR CONDUITS LARGER THAN 3/4 INCH.

K. NEW HANGERS AND SUPPORT SYSTEMS SHALL MEET NPC4 PERFORMANCE RATINGS FOR SEISMIC BRACING.

3.11 EQUIPMENT CONNECTIONS

A. VERIFICATION: OBTAIN AND REVIEW SHOP DRAWINGS, PRODUCT DATA AND MANUFACTURER'S INSTRUCTIONS FOR EQUIPMENT FURNISHED BY OTHERS. EXAMINE ACTUAL EQUIPMENT TO VERIFY PROPER CONNECTION LOCATIONS AND REQUIREMENTS.

B. ROUGH–IN: PROVIDE ALL REQUIRED CONDUIT, BOXES, FITTINGS, WIRES, CONNECTORS, AND MISCELLANEOUS ACCESSORIES, ETC., AS NECESSARY TO ROUGH IN THE MAKE FINAL CONNECTIONS TO ALL EQUIPMENT REQUIRING ELECTRICAL CONNECTIONS. IN GENERAL, MOTORS AND EQUIPMENT SHALL BE WIRED IN CONDUIT TO A JUNCTION BOX (OR SAFETY SWITCH) NEAR THE UNIT, AND FROM THERE TO THE UNIT IN FLEXIBLE METAL OR LIQUID TIGHT FLEXIBLE STEEL CONDUIT.

C. CONNECTIONS: PROVIDE PROPERLY SIZED OVERLOAD AND SHORT CIRCUIT PROTECTION FOR ALL EQUIPMENT CONNECTED, WHETHER FURNISHED UNDER THIS CONTRACT OR BY OTHERS. VERIFY PRIOR CONNECTIONS WITH MANUFACTURER'S PUBLISHED DIAGRAMS AND COMPLY WITH SAME. VERIFY THAT EQUIPMENT IS READY FOR ELECTRICAL CONNECTIONS, WIRING AND ENERGIZATION, PRIOR TO PERFORMING SAME.

D. CONTROL WIRING: PROVIDE ALL CONTROL WIRING TO REMOTE DEVICES OR EQUIPMENT, AS INDICATED OR REQUIRED. MODIFY EQUIPMENT CONTROL WIRING, INSTALL OR DISCONNECT JUMPERS, ETC., AS REQUIRED.

3.12 IDENTIFICATION

A. GENERAL: LOCATE NAME PLATE MARKING, OR OTHER IDENTIFICATION MEANS ON OUTSIDE OF EQUIPMENT OR BOX FRONT COVERS WHEN ABOVE CEILINGS AND WHEN IN MECHANICAL OR ELECTRICAL EQUIPMENT ROOMS OR OTHER UNFINISHED AREAS, AND ON INSIDE OF FRONT COVER WHEN IN FINISHED ROOMS/ AREAS. USE CONTRACT DOCUMENT DESIGNATIONS FOR IDENTIFICATION UNLESS OTHERWISE NOTED.

B. NAMEPLATES: PROVIDE NAME PLATE ENGRAVED WITH EQUIPMENT DESIGNATION FOR EACH SAFETY SWITCH, PANEL BOARD, TRANSFORMER, MOTOR STARTER, AND ALL OTHER EQUIPMENT, ETC. USING LAMINATED PLASTIC WITH WHITE BACK GROUND & BLACK LETTERING.

C. UNDERGROUND WARNING TAPE: DURING TRENCH BACK FILLING FOR EACH UNDERGROUND ELECTRICAL, TELEPHONE, SIGNAL AND COMMUNICATIONS LINE, PROVIDE A CONTINUOUS UNDERGROUND WARNING TAPE LOCATED DIRECTLY ABOVE LINE, AT TWELVE INCHES BELOW FINISHED GRADE.

D. MARK EACH JUNCTION AND PULL BOX INDICATING SOURCE DESIGNATION AND CIRCUIT NUMBER(S) FOR THE ENCLOSED CONDUCTORS USING LAMINATED PLASTIC WITH WHITE BACK GROUND & BLACK LETTERING.

E. ALL CONDUITS SHALL BE TAGGED/IDENTIFIED INSIDE ALL PULL BOXES, J–BOXES, AND CABINETS WITH P–TOUCH TYPE PRINTED LABELS. (1/2" LABEL, WHITE FACE WITH BLACK LETTERING.)

F. LOAD CENTER CIRCUIT DIRECTORIES: AT COMPLETION OF PROJECT, ACCURATELY COMPLETE EACH PANEL BOARD CIRCUIT DIRECTORY CARD, IDENTIFYING LOAD SERVED, "SPARE" OR "SPACE" FOR EACH CIRCUIT POLE. WHEN MODIFYING, ADDING, OR DELETING CIRCUITS AT AN EXISTING PANEL BOARD, UPDATE THE EXISTING (OR PROVIDE NEW) CIRCUIT DIRECTORY CARD TO ACCURATELY REFLECT FINAL CONDITIONS.

LA-RICS
Los Angeles Regional Interoperable Communications System

GENERAL NOTES
GN5

NOTE: ALL INFORMATION IS SUBJECT TO FIELD VERIFICATION. ALL INFORMATION IS CONFIDENTIAL AND NOT FOR PUBLIC DISTRIBUTION WITHOUT EXPRESS CONSENT OF THE LOS ANGELES REGIONAL INTEROPERABLE COMMUNICATIONS SYSTEMS AUTHORITY.

3.13 CHECKOUT, TESTING AND ADJUSTING

A. POWER CONDUCTORS: CONTRACTOR SHALL CONDUCT A CONTINUITY & INSULATION TEST ON CONDUCTORS BETWEEN SERVICE DISCONNECT SWITCH & POWER CABINET.

B. GROUNDING – CLAMP–ON RESISTANCE OR INDUCED FREQUENCY TESTS WITH CLAMP–ON GROUND RESISTANCE TESTER (PER MOTOROLA R56 SPECIFICATIONS)

3.14 SYSTEM DEMONSTRATION

A. INSTRUCT [redacted] REPRESENTATIVES IN THE STARTUP, OPERATION AND MAINTENANCE OF ALL ELECTRICAL SYSTEMS AND EQUIPMENT AS REQUESTED BY [redacted] REPRESENTATIVE.

3.15 CLEANING AND TOUCH –UP PAINTING

A. GENERAL: PERIODICALLY REMOVE FROM THE PROJECT SITE, ALL WASTE, RUBBISH AND CONSTRUCTION DEBRIS ACCUMULATED FROM CONSTRUCTION OPERATIONS. THE PREMISES SHALL BE LEFT FREE OF ANY DEBRIS AND UNUSED CONSTRUCTION MATERIALS PRIOR TO FINAL ACCEPTANCE.

B. ELECTRICAL EQUIPMENT: REMOVE ALL DUST, DIRT, DEBRIS, MORTAR, WIRE SCRAPS, RUST, AND OTHER FOREIGN MATERIALS FROM THE INTERIOR AND EXTERIOR OR ALL ELECTRICAL EQUIPMENT AND ENCLOSURES, AND WIPE DOWN. CLEAN ACCESSIBLE CURRENT CARRYING ELEMENTS AND INSULATORS PRIOR TO ENERGIZING.

C. TOUCH–UP PAINTING: RESTORE AND REFINISH TO ORIGINAL CONDITION ALL SURFACES OR ELECTRICAL EQUIPMENT THAT IS SCRATCHED, MARRED AND/OR DENTED DURING SHIPPING, HANDLING, OR INSTALLATION. REMOVE ALL RUST, AND PRIME AND PAINT AS RECOMMENDED BY MANUFACTURER.

3.16 COAXIAL CABLE INSTALLATION

A. THE COAXIAL CABLE SIZE SHALL BE AS SHOWN ON DRAWINGS. (REFERENCE PAGE A5)

B. COAXIAL CABLE SUPPORTS

1. SUPPORT COAXIAL CABLES INSIDE MONOPOLES WITH "KELLEM" GRIP TYPE PRODUCTS.

2. SECURE AND SUPPORT COAXIAL CABLES ON OPEN WAVEGUIDES SLOTS/LOCATIONS FOR SELF SUPPORT TOWERS.

3. SECURE AND SUPPORT COAXIAL CABLES ON ICE BRIDGES AS INDICATED ON DRAWINGS.

C. COAXIAL CABLE GROUNDING

1. THE COAXIAL CABLES SHALL BE GROUNDED TO TOWER STEEL OR GROUND BAR AT THE ANTENNAS USING THE GROUNDING KITS AS SPECIFIED ON THE DRAWINGS.

2. THE COAXIAL CABLES SHALL BE GROUNDED TO A GROUND BAR AT THE BOTTOM OF THE TOWER OR MONOPOLE USING THE KITS SPECIFIED ON THE DRAWINGS.

3. THE COAXIAL CABLES SHALL BE GROUNDED TO A GROUND BAR AT THE BULKHEADS USING THE GROUNDING KITS AS SPECIFIED ON THE DRAWINGS.

4. THE COAXIAL CABLES SHALL BE GROUNDED ON ALL TOWERS AT A MINIMUM OF EVERY 200' UP THE TOWER.

3.17 TELEPHONE SERVICE

A. LA–RICS WILL ORDER AND INSTALL THE T–1 SERVICE.

3.18 ELECTRICAL SERVICE

A. GENERAL: ARRANGE WITH THE UTILITY COMPANY AND LA–RICS FOR A TIMELY INSTALLATION OF THE TEMPORARY ELECTRIC SERVICE (IF REQUIRED) AND PERMANENT ELECTRIC SERVICES. COMPLY WITH AND COORDINATE ALL REQUIREMENTS OF THE UTILITY COMPANY.

B. CONTRACTOR WILL COORDINATE WITH ELECTRICAL UTILITY SERVICE PROVIDER FOR ALL INSPECTIONS AND METER SET.

C. ARRANGE FOR AN INSPECTION OF THE ELECTRICAL SERVICE BY THE AUTHORITY HAVING JURISDICTION. OBTAIN A CERTIFICATE OF INSPECTION IF POSSIBLE FROM THE JURISDICTION. FURNISH A COPY OF THE CERTIFICATE TO [redacted] WITH THE HANDOFF PACKAGE AND A COPY TO THE UTILITY COMPANY.

E. COORDINATE METER SOCKET REQUIREMENTS WITH THE ELECTRIC UTILITY AS REQUIRED

F. GROUNDING: PROVIDE GROUNDING ELECTRODE SYSTEM FOR THE SERVICE, PER THE NEC, PER UTILITY COMPANY REQUIREMENTS, AND AS INDICATED.

G. SHORT CIRCUIT RATINGS: PROVIDE EQUIPMENT WITH HIGHER FAULT CURRENT RATINGS AS NEEDED TO MATCH UTILITY COMPANY AVAILABLE FAULT CURRENT.

ART 4 – TESTING

4.1 PRELIMINARY INSPECTION

A. PRIOR TO TESTING, CONTRACTOR WILL PERFORM INSPECTION OF ANTENNA AND COAXIAL SYSTEM AND RECORD FINDINGS ON "ANTENNA INSPECTION FORM". ALL ITEMS SHOULD BE LISTED AS COMPLETE ON THIS FORM PRIOR TO ANTENNA SYSTEM TESTING.

4.2 EQUIPMENT

A. ALL TEST EQUIPMENT SHALL BE CALIBRATED PER MANUFACTURER SPECS. CALIBRATION CERTIFICATES WILL BE PROVIDED TO [redacted] THIS SHALL INCLUDE BUT NOT LIMITED TO COAX SWEEPS AND GROUNDING.

4.3 PARAMETERS

A. ALL COAXIAL ANTENNA SYSTEMS TO MEET [redacted] SWEEP TEST PROCEDURES.

4.4 NOTIFICATION

A. CONTRACTOR SHALL NOTIFY [redacted] DESIGNATED REPRESENTATIVE A MINIMUM OF 24 HOURS PRIOR TO ANTENNA SYSTEMS TESTING.

4.5 AZIMUTH VERIFICATION

A. PRIOR TO TESTING, CONTRACTOR SHALL VERIFY THAT ALL AZIMUTHS AND DOWN TILTS ARE TRUE. CONTRACTOR SHALL ENSURE THAT ALL CONNECTORS HAVE BEEN INSTALLED TO THE SPECIFIED TORQUE VALUES (IF APPLICABLE).

4.6 DELIVERY

A. CONTRACTOR SHALL ISSUE 3 HARD AND 1 SOFT PACKAGES TO THE GDIT DESIGNATED REPRESENTATIVE AND LEAVE 1 COPY INSIDE THE SHELTER AFTER SITE HAS BEEN ACCEPTED. MUST BE COMPLETED WITHIN 5 DAYS.

PART 5 – COLOR CODES:

A. REFER TO PAGE A5, DETAIL 01 FOR COLOR CODE TABLE

B. LAMINATED PLASTIC TAGS REQUIREMENTS:

1. WHITE BACKGROUND WITH BLACK LETTERING
2. SECURE TAGS WITH STAINLESS STEEL TIES
3. TAGS SHALL BE STAMPED ON ONE SIDE ONLY
4. TAGS STAMPING SHALL BE WITH TEXT HEIGHT OF 5/16" OR LARGER
5. TAGS TO BE LOCATED WITHIN 12" OF MAIN COAX TO ANTENNA JUMPER CONNECTION AND INSIDE SHELTER ENTRY PORT.

LA-RICS
Los Angeles Regional Interoperable Communications System

GENERAL NOTES
GN6

NOTE: ALL INFORMATION IS SUBJECT TO FIELD VERIFICATION. ALL INFORMATION IS CONFIDENTIAL AND NOT FOR PUBLIC DISTRIBUTION WITHOUT EXPRESS CONSENT OF THE LOS ANGELES REGIONAL INTEROPERABLE COMMUNICATIONS SYSTEMS AUTHORITY.

PART 6 – CONTRACTOR DELIVERABLES

A. THE CONTRACTOR SHALL CARRY ON HIS WORK IN ACCORDANCE WITH ALL GOVERNING NATIONAL, STATE, COUNTY AND LOCAL CODES, AS WELL AS, OSHA REGULATIONS.

B. TESTING OF CAST–IN–PLACE CONCRETE, STRUCTURAL, STEEL AND ANY OTHER MATERIAL USED SHALL BE AS REQUIRED BY AND IN ACCORDANCE WITH LOCAL REGULATIONS.

C. THE GROUNDING SYSTEM FOR EACH SITE SHALL BE TESTED FOR A GROUND RESISTANCE OF 5 OHMS. ONE OF THE THREE TESTS SHALL BE USED: IEEE FALL – OF – POTENTIAL TEST. AN APPROVED CLAMP ON TEST, OR A DIRECT METHOD (TWO–TERMINAL) "CONTINUITY" TEST. THE FALL – OF – POTENTIAL TEST IS THE PREFERRED TESTING METHOD AND SHALL BE USED WHENEVER POSSIBLE. ANY GROUND RESISTANCE OF GREATER THAN 5 OHMS BUT LESS THAN 25 OHMS SHALL BE REVIEWED BY LA–RICS AUTHORITY AND AGREED UPON WITH [redacted] ON A CASE–BY–CASE BASIS.

D. THE CONTRACTOR SHALL SUBMIT AN ANTENNA SWEEP TEST INCLUDING THREE (3) HARD COPIES OF ALL SWEEP GRAPHICS AND SITE SUBMISSION FORMS AND ONE (1) SOFT COPY (DATABASE FILE) THE SOFT COPY SHALL BE CONTAINED ON A CD/DVD. THE FILE SHALL BE NAMED USING THE SITE NUMBER AND THE THREE LETTER EXTENSION OF THE ELECTRONIC FILE. ANTENNA SWEEPS SUPPLIED BY MFGR.–SWEEP TEST RESULTS THAT INCLUDE:

1. INSERTION LOSS SWEEP
2. LINE LENGTH SWEEP
3. RETURN LOSS OF LINE SWEEP
4. ANTENNA RETURN LOSS SWEEP
5. RETURN LOSS SYSTEM SWEEP (THROUGH ANTENNA)
6. DTF SWEEP THROUGH THE SYSTEM INCLUDING ANTENNA

E. AS–BUILT INFORMATION: TWO (2) COPIES OF A REPORT CONTAINING A DESCRIPTION OF THE TOWER/ MONOPOLE, SKETCHES AND RED–LINED CONSTRUCTION DRAWINGS SHALL BE SUBMITTED. THE MAXIMUM SIZE OF ANY DRAWING IN THE REPORT SHALL BE 11"x17". THE COVER SHEET OF THE REPORT SHALL CONTAIN THE SITE NAME AND SITE NUMBER. ALSO INCLUDED IN THIS REPORT SHALL BE RED–LINED RF INFORMATION.

F. CONTRACTOR SHALL HAVE 72 HOURS TO COMPLETE PUNCH–LIST ITEMS FOUND INCOMPLETE OR INADEQUATE BY LA–RICS AUTHORITY DURING SITE COMPLETION WALK AND IN TURN TO [redacted]

G. ONE ORIGINAL OF EACH OF THE FOLLOWING SHALL BE PROVIDED TO [redacted] UPON COMPLETION OF THE PROJECT:

1. CERTIFICATE OF OCCUPANCY OR COMPLETION FROM JURISDICTION (IF AVAILABLE)
2. ALL INSPECTIONS SIGN OFFS
3. BUILDING AND ELECTRICAL PERMITS
4. RELEASE OF WAIVERS & LIENS
5. ANTENNA PACKETS (EQUIPMENT INFORMATION, PAPERS, ETC)
6. WARRANTIES
7. SITE CHECKLIST PUNCH LIST COMPLETION AND SIGNED
8. ANTENNA STRUCTURE SUPPORT SPECIFICATIONS.
9. ANTENNA STRUCTURE REGISTRATION.
10. ANTENNA SPECIFICATIONS, COAX TESTING REPORT. RETURN LOSS SHEET
11. COMPACTION TEST REPORT
12. CONCRETE PLACEMENT REPORT
13. ANTENNA DIAGRAMS/MOUNTING DETAILS.
14. EQUIP/CABLE LABELING.
15. SITE SPECIFIC ACCEPTANCE TEST RESULTS.
16. SITE FINAL PHOTOS (BEFORE AND AFTER).
17. SITE CONSTRUCTION PHOTOS (PER CHECKLIST REQUIREMENT)
18. ALL SITE FINAL INSPECTION – BUILDING, ELECTRICAL, ETC.
19. GROUND RESULT REPORT (BEFORE ELECTRICAL NEUTRAL ATTACHMENT & AFTER NEUTRAL ATTACHMENT) – 5 OHMS OR LESS
20. AS–BUILT DRAWINGS.
21. MILL CERTS FOR ALL STEEL
22. ANTENNA HEIGHT CERTIFICATION REPORT
23. ANTENNA AZIMUTH DATA. (PER DETERMINED METHOD)
24. RET TILT INFORMATION AS CLARIFIED BY [redacted] SCREENSHOTS W/ NAMING TO BE PROVIDED PER [redacted] SPECS.

H. ALL PERMITS ARE TO BE ON–SITE AT ALL TIMES, INCLUDING DURING AND AFTER CONSTRUCTION.

ABBREVIATIONS & LEGEND

A/C	AIR CONDITIONING
ADJ.	ADJUSTABLE
AFF	ABOVE FINISH FLOOR
APPROX.	APPROXIMATELY
ASTM	AMERICAN SOCIETY FOR TESTING AND MATERIALS
AWG	AMERICAN WIRE GAUGE
BLDG.	BUILDING
BLK.	BLOCK
BMR	BASE MOBILE RADIO
B/S	BUILDING STANDARD
CLG	CEILING
CLR.	CLEAR
CONC.	CONCRETE
CONST.	CONSTRUCTION
CONT.	CONTINUOUS
DBL.	DOUBLE
DIA., ø	DIAMETER
DIAG.	DIAGONAL
DIM.	DIMENSION
DN	DOWN
DTL, DETL	DETAIL
DWG.	DRAWING
E	EAST
EA.	EACH
EL, ELEV	ELEVATION
ELECT	ELECTRICAL
EQ.	EQUAL
EQUIP.	EQUIPMENT
E.W.	EACH WAY
EXIST.	EXISTING
EXT	EXTERIOR
(E)	EXISTING
FIN.	FINISH
FLUOR.	FLUORESCENT
FLR	FLOOR
FT.	FOOT
FG	FINISH GRADE
FS	FINISH SURFACE
GA.	GAUGE
GALV	GALVANIZE(D)
CONTRACTOR	GENERAL CONTRACTOR
GND, GRND	GROUND
GWB	GYPSUM WALL BOARD
GYP. BD.	GYPSUM BOARD
HARD'WD	HARDWOOD
HORIZ.	HORIZONTAL
HR	HOUR
HT.	HEIGHT
HVAC	HEATING, VENTING AND AIR CONDITIONING
I.D.	INSIDE DIA.
IN.	INCH
INFO	INFORMATION
INSUL.	INSULATION
INT.	INTERIOR
LB(S)	POUND(S)
MAX	MAXIMUM
MECH	MECHANICAL
MET, MTL	METAL
MFR.	MANUFACTURER
MGR	MANAGER
MIN	MINIMUM
MISC	MISCELLANEOUS
N	NORTH
NA	NOT APPLICABLE
NG	GROUND SPOT ELEVATION
NIC	NOT IN CONTRACT
NTS	NOT TO SCALE
(N)	NEW
OC, o/c	ON CENTER
OD	OUTSIDE DIAMETER
OPG.	OPENING
OPP	OPPOSITE
(P)	PROPOSED
PLYWD.	PLYWOOD
PR	PAIR
PROJ	PROJECT
PROP	PROPERTY
PT	PRESSURE TREATED
REQ'D	REQUIRED
RM	ROOM
R.O.	ROUGH OPENING
S	SOUTH
SHT	SHEET
SIM.	SIMILAR
SPEC.	SPECIFICATION
SQ	SQUARE
SS	STAINLESS STEEL
STL.	STEEL
STRUCT.	STRUCTURAL
SUSP.	SUSPENDED
S.V.	SHEET VINYL
THRU	THROUGH
TNND	TINNED
T.O.C.	TOP OF CURB
T.O.M.	TOP OF MASONRY
TYP	TYPICAL
TOW	TOP OF WALL
UBC	UNIFORM BUILDING CODE
UNO	UNLESS NOTED OTHERWISE
VERT.	VERTICAL
VIF	VERIFY IN FIELD
VT	VINYL TILE
W	WEST
W/	WITH
WIN	WINDOW
W/O	WITHOUT
W.P.	WATERPROOF
∡	ANGLE
&	AND
℄	CENTER LINE
ℙ	PROPERTY LINE
@	AT
#	NUMBER

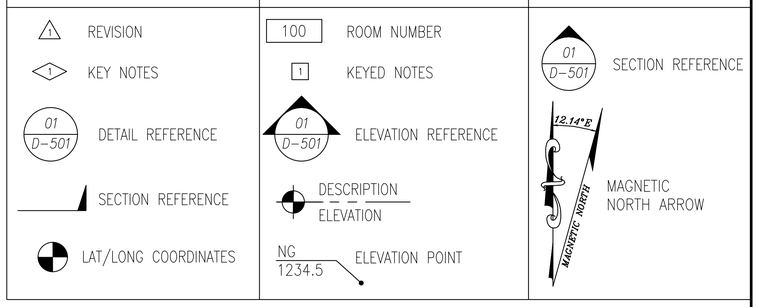

LA-RICS
Los Angeles Regional Interoperable Communications System

GENERAL NOTES AND LEGEND
GN7

NOTE: ALL INFORMATION IS SUBJECT TO FIELD VERIFICATION. ALL INFORMATION IS CONFIDENTIAL AND NOT FOR PUBLIC DISTRIBUTION WITHOUT EXPRESS CONSENT OF THE LOS ANGELES REGIONAL INTEROPERABLE COMMUNICATIONS SYSTEMS AUTHORITY.

[redacted]

Vicinity Map

Title Report

THIS SURVEY WAS COMPLETED WITHOUT THE BENEFIT OF A TITLE REPORT.
PREPARED BY:
ORDER NO.:
DATED:

Legal Description

[redacted]

Assessor's Parcel No.

[redacted]

Easements

NOT AVAILABLE

Access Easement/Lease Area

TO BE DETERMINED

Geographic Coordinates at Center of Proposed Sectors

1983 DATUM: LATITUDE [redacted]
ELEVATION = 310.0 FEET ABOVE MEAN SEA LEVEL

CERTIFICATION:
THE LATITUDE AND LONGITUDE SHOWN ABOVE ARE ACCURATE TO WITHIN +/- 15 FEET HORIZONTALLY AND THAT THE ELEVATIONS SHOWN ABOVE ARE ACCURATE TO WITHIN +/- 3 FEET VERTICALLY. THE HORIZONTAL DATUM (GEOGRAPHIC COORDINATES) IS IN TERMS OF THE NORTH AMERICAN DATUM OF 1983 (NAD 83) AND IS EXPRESSED IN DEGREES (°), MINUTES (') AND SECONDS ("), TO THE NEAREST HUNDREDTH OF A SECOND. THE VERTICAL DATUM (ELEVATIONS) IS IN TERMS OF THE NORTH AMERICAN VERTICAL DATUM OF 1988 (NAVD 88) AND IS DETERMINED TO THE NEAREST TENTH OF A FOOT.

Basis of Bearings

THE STATE PLANE COORDINATE SYSTEM OF 1983 (NAD 83), CALIFORNIA ZONE 5.

Bench Mark

THE CALIFORNIA SPATIAL REFERENCE CENTER C.O.R.S "RTCM", ELEVATION = 399.96 FEET (NAVD 88).

Date of Survey

MAY 28, 2015

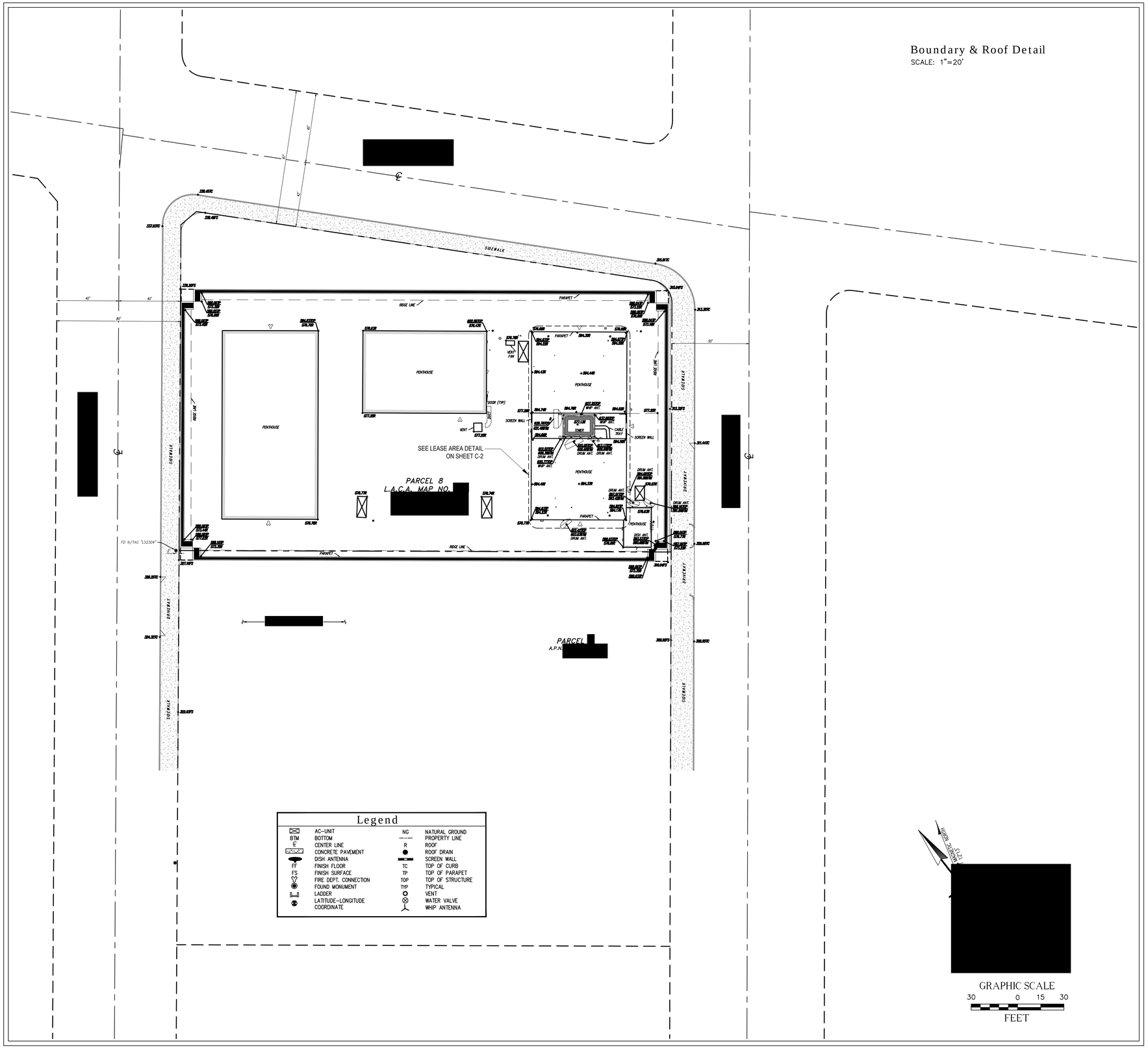

LA-RICS
Los Angeles Regional Interoperable Communications System

[redacted]

TOPOGRAPHIC SURVEY

C-1

[redacted]

Vicinity Map

Title Report

THIS SURVEY WAS COMPLETED WITHOUT THE BENEFIT OF A TITLE REPORT.
PREPARED BY:
ORDER NO.:
DATED:

Legal Description

[redacted]

Assessor's Parcel No.

[redacted]

Easements

NOT AVAILABLE

Access Easement/Lease Area

TO BE DETERMINED

Geographic Coordinates at Center of Proposed Sectors

1983 DATUM: LATITUDE [redacted]
ELEVATION = 310.0 FEET ABOVE MEAN SEA LEVEL

CERTIFICATION:
THE LATITUDE AND LONGITUDE SHOWN ABOVE ARE ACCURATE TO WITHIN +/- 15 FEET HORIZONTALLY AND THAT THE ELEVATIONS SHOWN ABOVE ARE ACCURATE TO WITHIN +/- 3 FEET VERTICALLY. THE HORIZONTAL DATUM (GEOGRAPHIC COORDINATES) IS IN TERMS OF THE NORTH AMERICAN DATUM OF 1983 (NAD 83) AND IS EXPRESSED IN DEGREES (°), MINUTES (') AND SECONDS ("), TO THE NEAREST HUNDREDTH OF A SECOND. THE VERTICAL DATUM (ELEVATIONS) IS IN TERMS OF THE NORTH AMERICAN VERTICAL DATUM OF 1988 (NAVD 88) AND IS DETERMINED TO THE NEAREST TENTH OF A FOOT.

Basis of Bearings

THE STATE PLANE COORDINATE SYSTEM OF 1983 (NAD 83), CALIFORNIA ZONE 5.

Bench Mark

THE CALIFORNIA SPATIAL REFERENCE CENTER C.O.R.S "RTCM", ELEVATION = 399.96 FEET (NAVD 88).

Date of Survey

MAY 28, 2015

Legend

	AC-UNIT	NG	NATURAL GROUND
BTM	BOTTOM		PROPERTY LINE
℄	CENTER LINE	R	ROOF
	CONCRETE PAVEMENT		ROOF DRAIN
	DISH ANTENNA		SCREEN WALL
FF	FINISH FLOOR	TC	TOP OF CURB
FS	FINISH SURFACE	TP	TOP OF PARAPET
	FIRE DEPT. CONNECTION	TOP	TOP OF STRUCTURE
	FOUND MONUMENT	TYP	TYPICAL
	LADDER		VENT
	LATITUDE-LONGITUDE COORDINATE		WATER VALVE
			WHIP ANTENNA

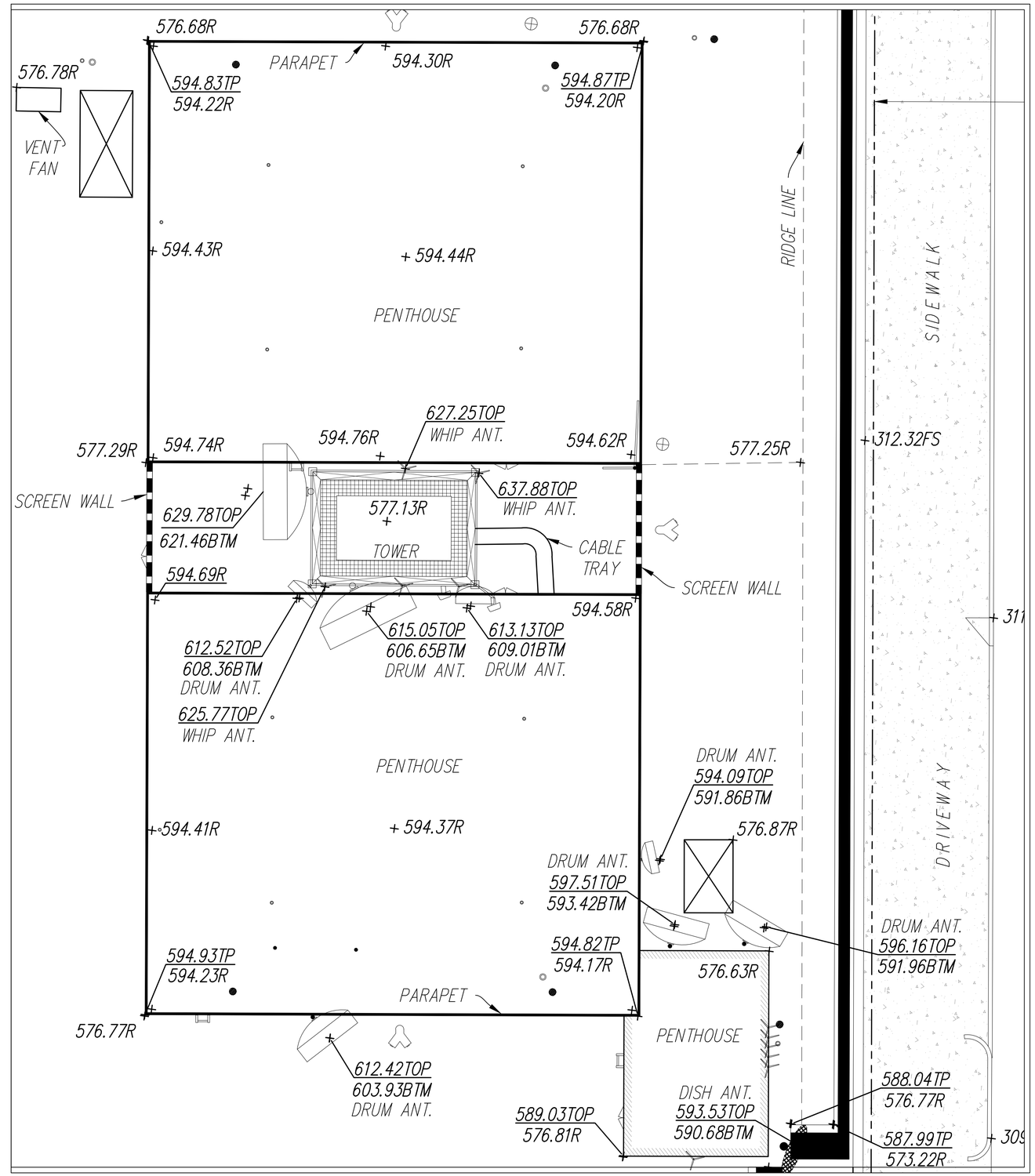

LEASE AREA DETAIL
SCALE: 1"=7'

[redacted]

GRAPHIC SCALE
7 0 3.5 7
FEET

LA-RICS
Los Angeles Regional Interoperable Communications System

[redacted]

TOPOGRAPHIC SURVEY
C-2

LA-RICS
Los Angeles Regional Interoperable Communications System

GENERAL NOTES:

1. CONSTRUCTION STAGING AREA TO BE DETERMINED AT PRE CONSTRUCTION WALK WITH LANDLORD & AUTHORITY
2. VERIFY POWER/UTILITY DESIGN PRIOR TO CONSTRUCTION
3. EXISTING DRAINAGE AND PATTERN TO REMAIN THE SAME

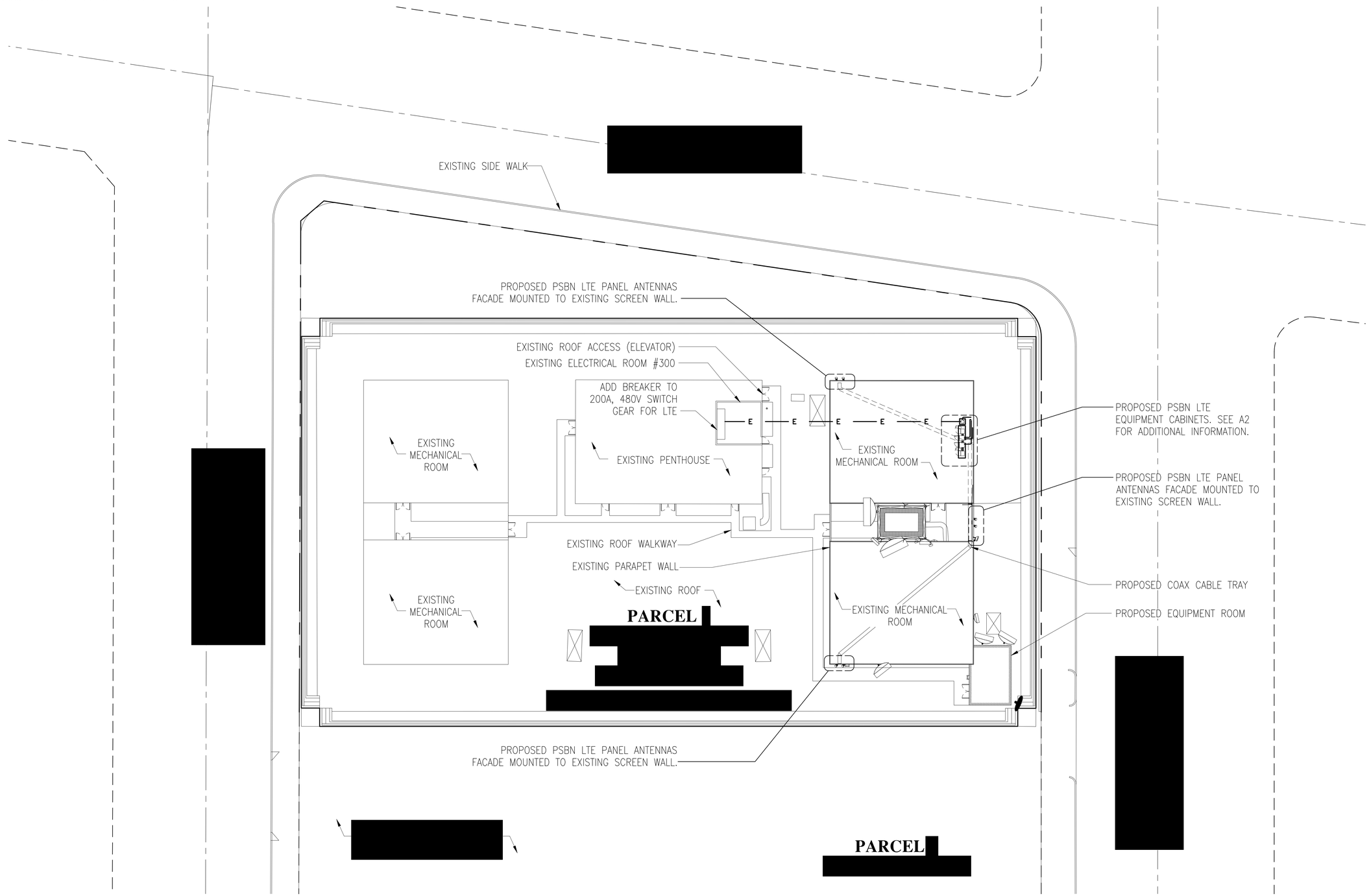

12°18'
MAGNETIC NORTH

01 **ROOF PLAN & NOTES**
SCALE: 1"=10'

10 0 5 10
SCALE: 1"= 10'

SITE PLAN
A1

NOTE: ALL INFORMATION IS SUBJECT TO FIELD VERIFICATION. ALL INFORMATION IS CONFIDENTIAL AND NOT FOR PUBLIC DISTRIBUTION WITHOUT EXPRESS CONSENT OF THE LOS ANGELES REGIONAL INTEROPERABLE COMMUNICATIONS SYSTEMS AUTHORITY.

LA-RICS
Los Angeles Regional Interoperable Communications System

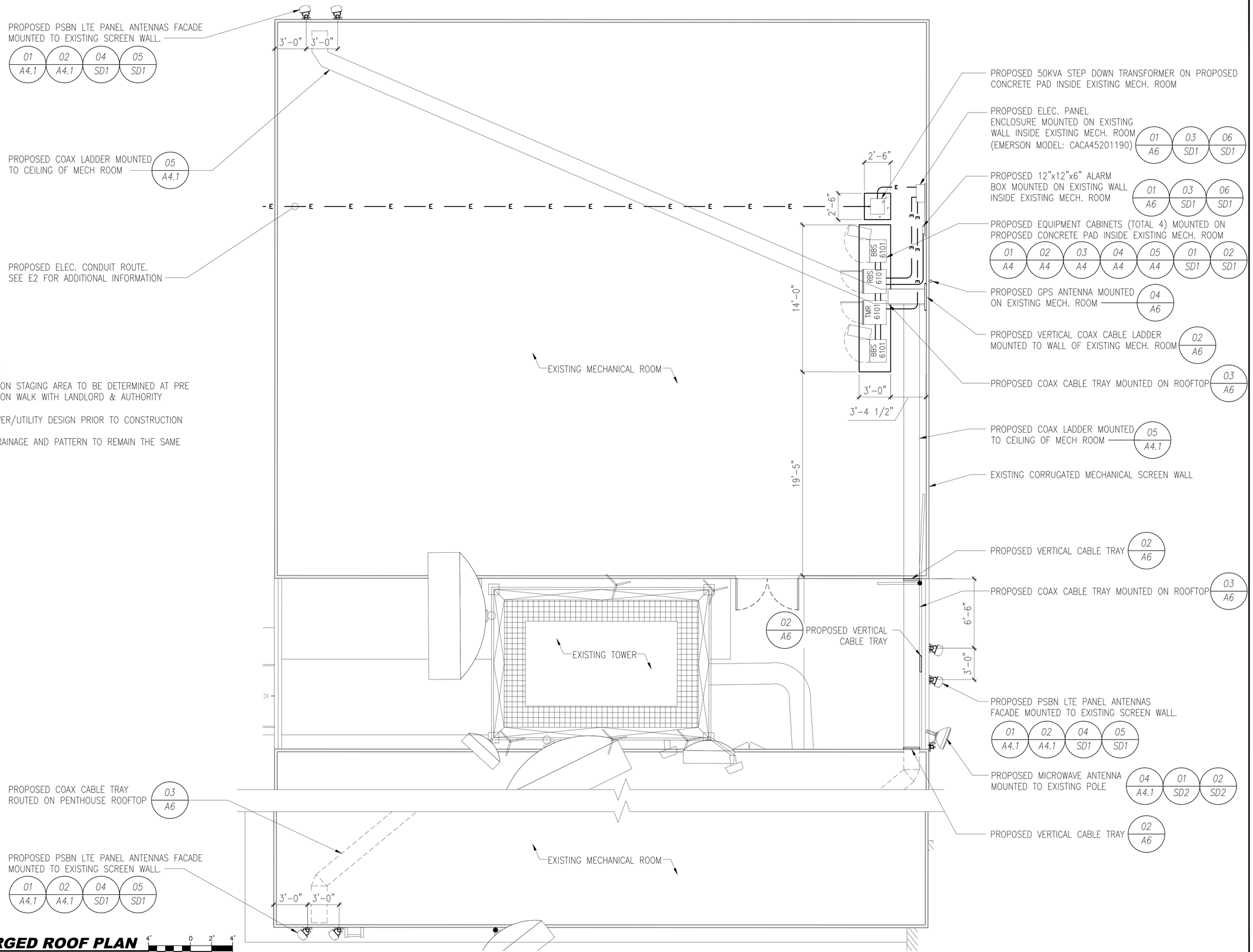

GENERAL NOTES:

1. CONSTRUCTION STAGING AREA TO BE DETERMINED AT PRE CONSTRUCTION WALK WITH LANDLORD & AUTHORITY
2. VERIFY POWER/UTILITY DESIGN PRIOR TO CONSTRUCTION
3. EXISTING DRAINAGE AND PATTERN TO REMAIN THE SAME

01 **ENLARGED ROOF PLAN**
SCALE: 1/4"=1'-0"
4' 0 2' 4'
SCALE: 1/4"= 1'-0"

ENLARGED SITE PLAN
A2

NOTE: ALL INFORMATION IS SUBJECT TO FIELD VERIFICATION. ALL INFORMATION IS CONFIDENTIAL AND NOT FOR PUBLIC DISTRIBUTION WITHOUT EXPRESS CONSENT OF THE LOS ANGELES REGIONAL INTEROPERABLE COMMUNICATIONS SYSTEMS AUTHORITY.

NOTE: ALL INFORMATION IS SUBJECT TO FIELD VERIFICATION. ALL INFORMATION IS CONFIDENTIAL AND NOT FOR PUBLIC DISTRIBUTION WITHOUT EXPRESS CONSENT OF THE LOS ANGELES REGIONAL INTEROPERABLE COMMUNICATIONS SYSTEMS AUTHORITY.

ANTENNA MOUNT SCHEDULE		
RAD CENTER	ANTENNA	SECTOR
275'	LNX-6515DS-A1M	
275'	LNX-6515DS-A1M	
275'	LNX-6515DS-A1M	

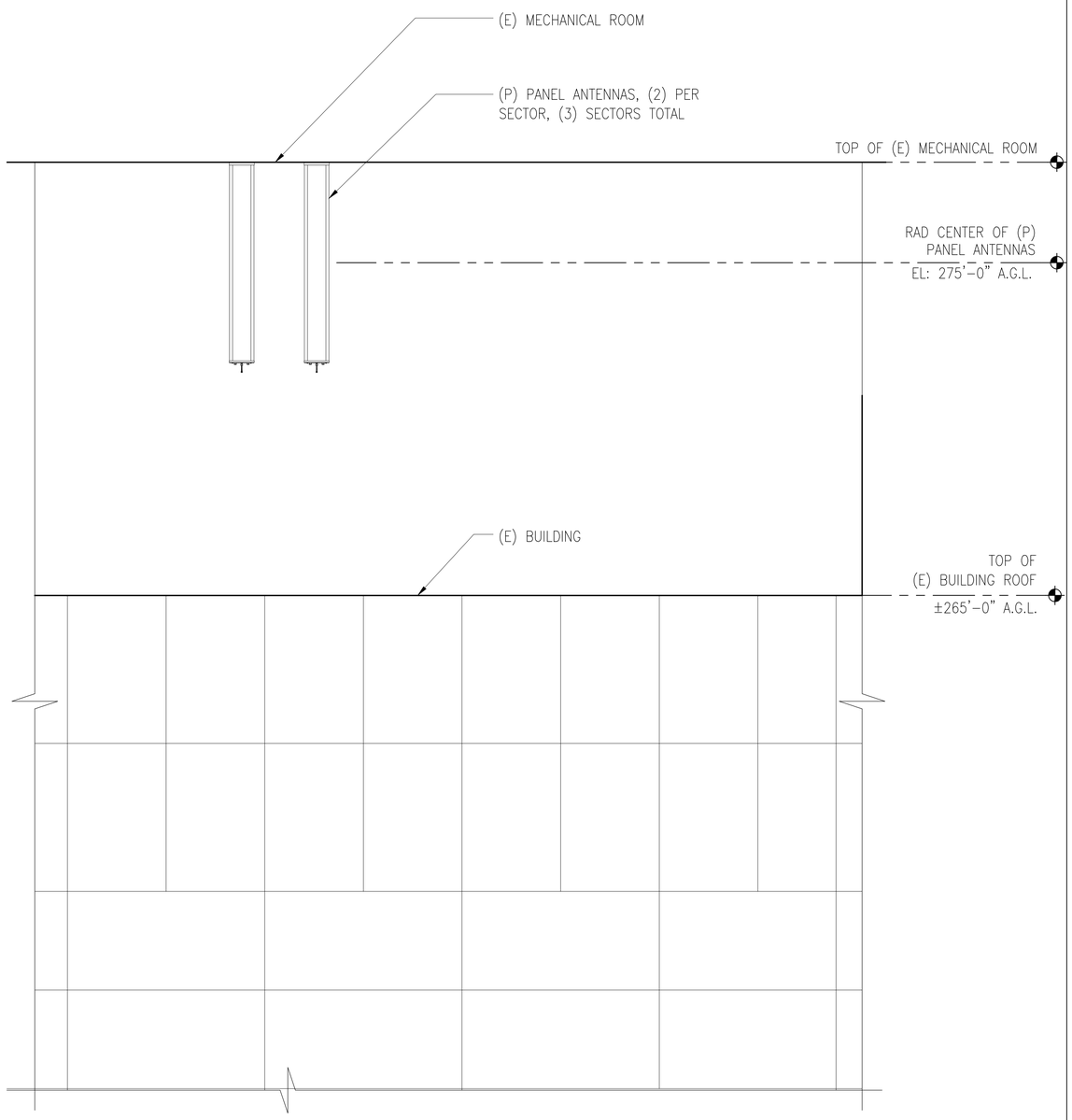

01 **TOWER ELEVATION**
SCALE: NTS

MICROWAVE MOUNT SCHEDULE	
RAD CENTER	MICROWAVE DISH
279'	

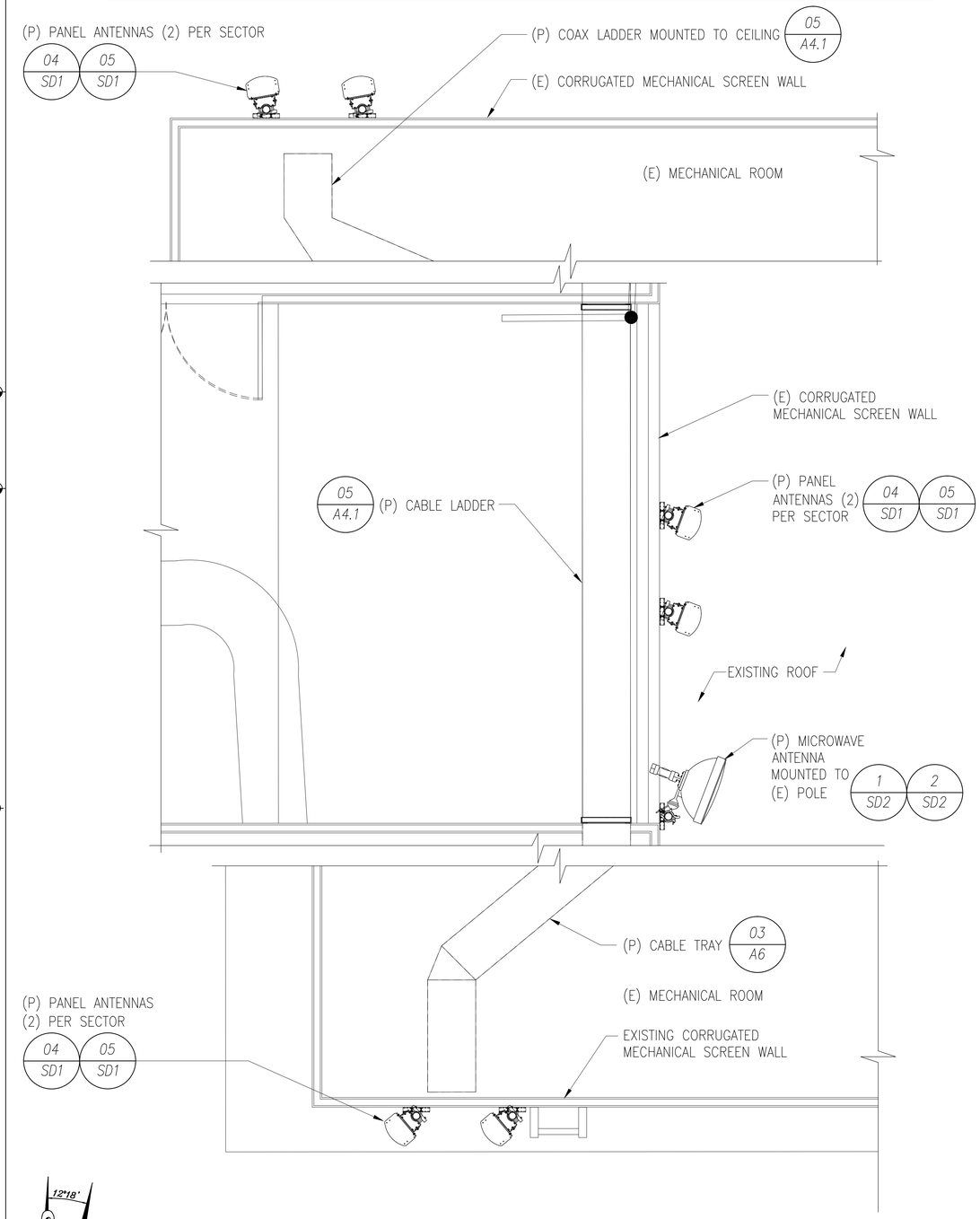

NOTES:

1. JUMPER TO BE MOUNTED 1 FT. AWAY FROM MAINLINE & ANTENNA CONNECTORS (EACH WAY) THEN EVERY 2 FT. UP TO ANTENNA.
2. NO PIPE TO PIPE ANTENNA MOUNT PERMITTED.
3. ACTUAL T-ARM MOUNT, ANTENNA, & MICROWAVE MOUNTING LOCATIONS AND AZIMUTHS TO BE INSTALLED PER FINAL RFDS SHEET. NEED TO VERIFY RFDS PRIOR TO INSTALLATION.

02 **TYPICAL ANTENNA/MICROWAVE LAYOUT PLAN VIEW**
SCALE: NTS

LA-RICS
Los Angeles Regional Interoperable Communications System

TOWER ELEVATION
A3

NOTE: ALL INFORMATION IS SUBJECT TO FIELD VERIFICATION. ALL INFORMATION IS CONFIDENTIAL AND NOT FOR PUBLIC DISTRIBUTION WITHOUT EXPRESS CONSENT OF THE LOS ANGELES REGIONAL INTEROPERABLE COMMUNICATIONS SYSTEMS AUTHORITY.

LA-RICS
Los Angeles Regional Interoperable Communications System

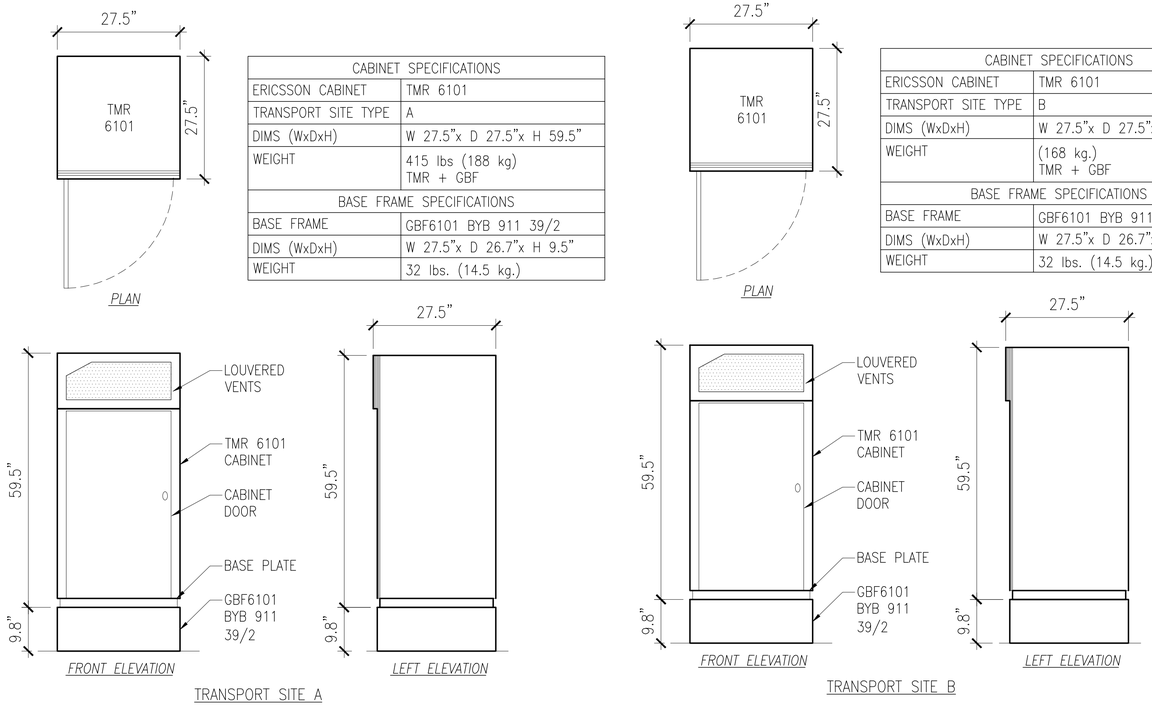

CABINET SPECIFICATIONS	
ERICSSON CABINET	TMR 6101
TRANSPORT SITE TYPE	A
DIMS (WxDxH)	W 27.5"x D 27.5"x H 59.5"
WEIGHT	415 lbs (188 kg) TMR + GBF
BASE FRAME SPECIFICATIONS	
BASE FRAME	GBF6101 BYB 911 39/2
DIMS (WxDxH)	W 27.5"x D 26.7"x H 9.5"
WEIGHT	32 lbs. (14.5 kg.)

CABINET SPECIFICATIONS	
ERICSSON CABINET	TMR 6101
TRANSPORT SITE TYPE	B
DIMS (WxDxH)	W 27.5"x D 27.5"x H 59.5"
WEIGHT	(168 kg.) TMR + GBF
BASE FRAME SPECIFICATIONS	
BASE FRAME	GBF6101 BYB 911 39/2
DIMS (WxDxH)	W 27.5"x D 26.7"x H 9.5"
WEIGHT	32 lbs. (14.5 kg.)

ALL INSTALLED CABINET TO BE KEYED THE SAME

01 TMR OUTDOOR EQUIPMENT CABINET
SCALE: NTS

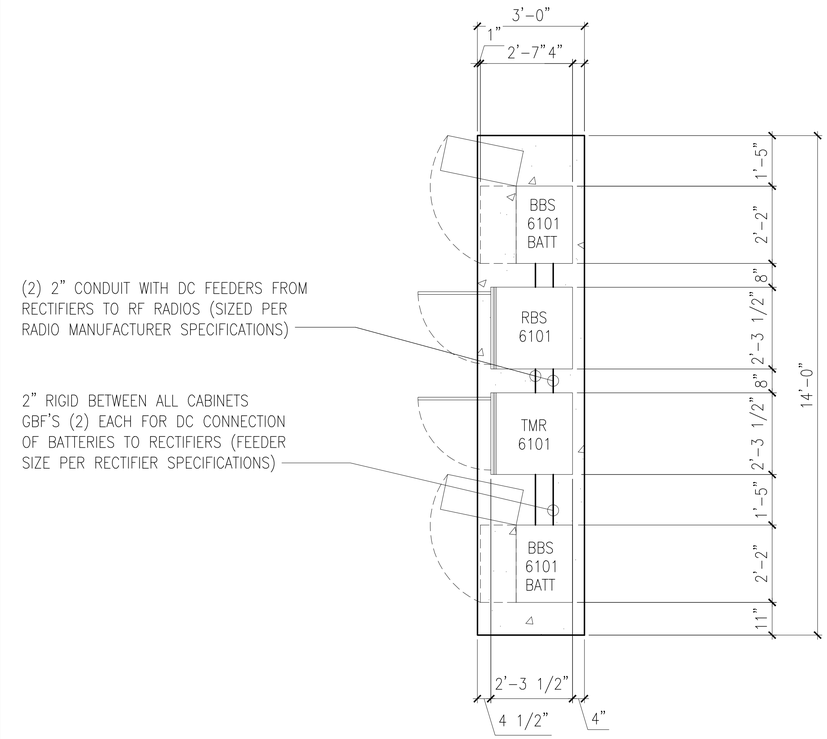

05 TYP. CABINET LAYOUT CONFIGURATION W/ CABINET SEPARATION
SCALE: 1/2"=1'-0"

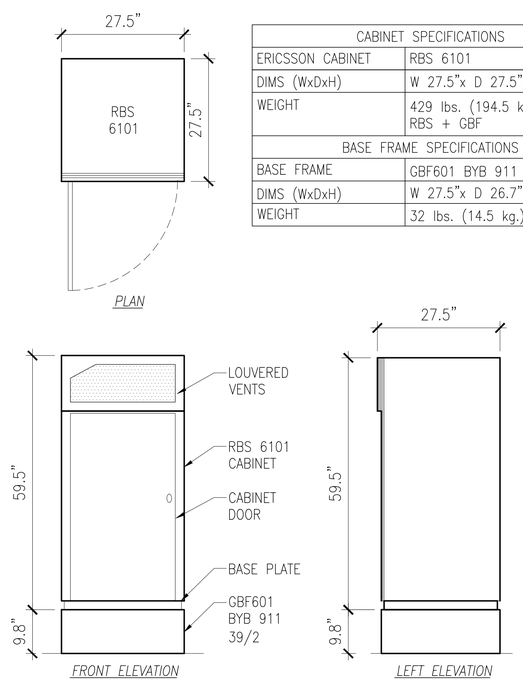

CABINET SPECIFICATIONS	
ERICSSON CABINET	RBS 6101
DIMS (WxDxH)	W 27.5"x D 27.5"x H 59.5"
WEIGHT	429 lbs. (194.5 kg.) RBS + GBF
BASE FRAME SPECIFICATIONS	
BASE FRAME	GBF601 BYB 911 39/2
DIMS (WxDxH)	W 27.5"x D 26.7"x H 9.5"
WEIGHT	32 lbs. (14.5 kg.)

02 RBS OUTDOOR EQUIPMENT CABINET
SCALE: NTS

WEIGHT	
UNIT	WEIGHT W/O BATTERIES AND CABLES BMK 901 115 R1B & R2A
CABINET W/O DOOR	85 kg.
EQ ZONE 4 CABINET W/O DOOR	148 kg.
CABINET WITH DOOR	128 kg.
EQ ZONE 4 CABINET WITH DOOR	191 kg.

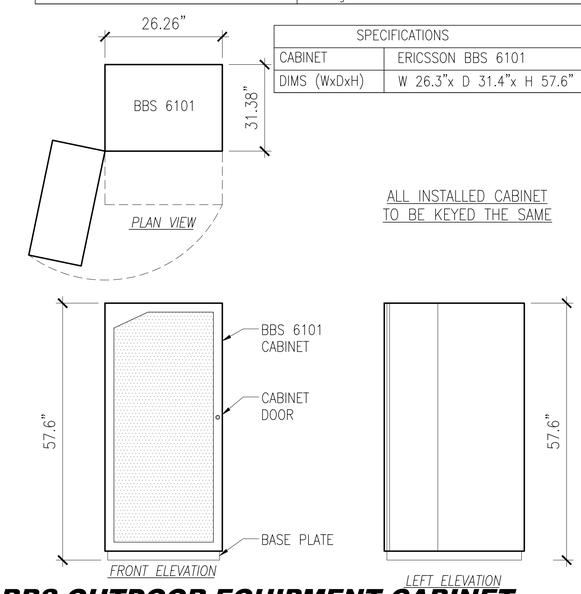

SPECIFICATIONS	
CABINET	ERICSSON BBS 6101
DIMS (WxDxH)	W 26.3"x D 31.4"x H 57.6"

ALL INSTALLED CABINET TO BE KEYED THE SAME

03 BBS OUTDOOR EQUIPMENT CABINET
SCALE: NTS

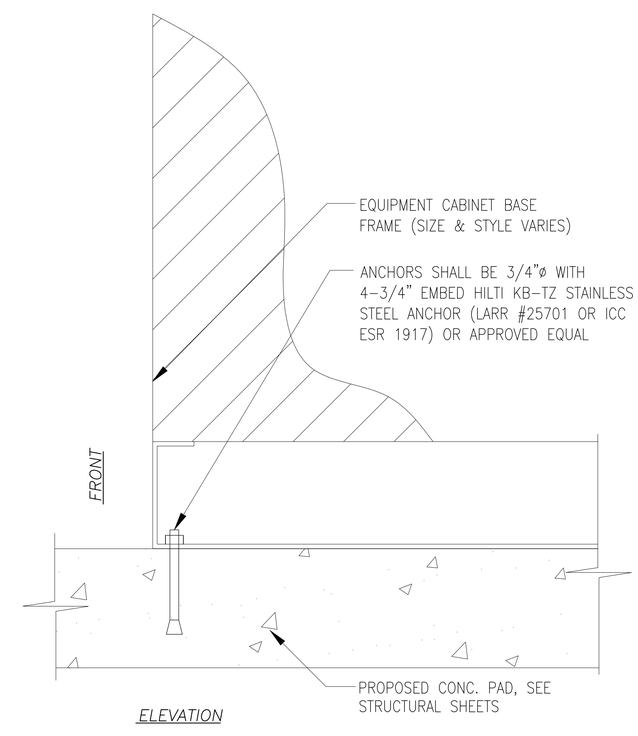

04 EQUIP, CABINET ATTACHMENT DETAIL
SCALE: NTS

EQUIPMENT DETAILS
A4

NOTE: ALL INFORMATION IS SUBJECT TO FIELD VERIFICATION. ALL INFORMATION IS CONFIDENTIAL AND NOT FOR PUBLIC DISTRIBUTION WITHOUT EXPRESS CONSENT OF THE LOS ANGELES REGIONAL INTEROPERABLE COMMUNICATIONS SYSTEMS AUTHORITY.

LA-RICS
Los Angeles Regional Interoperable Communications System

[redacted]

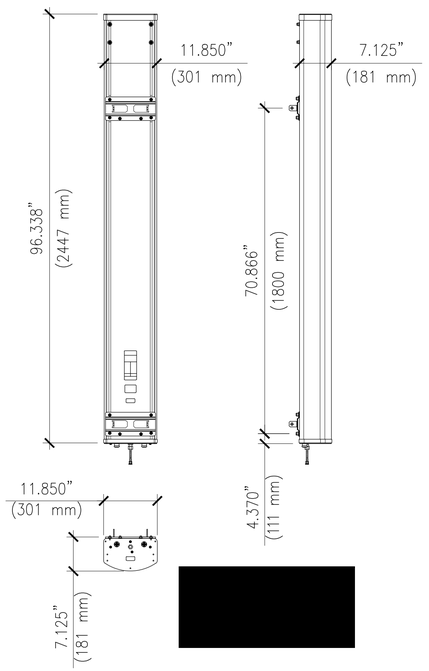

[redacted]

01 ANTENNA ATTACHMENT DETAILS
SCALE: NTS

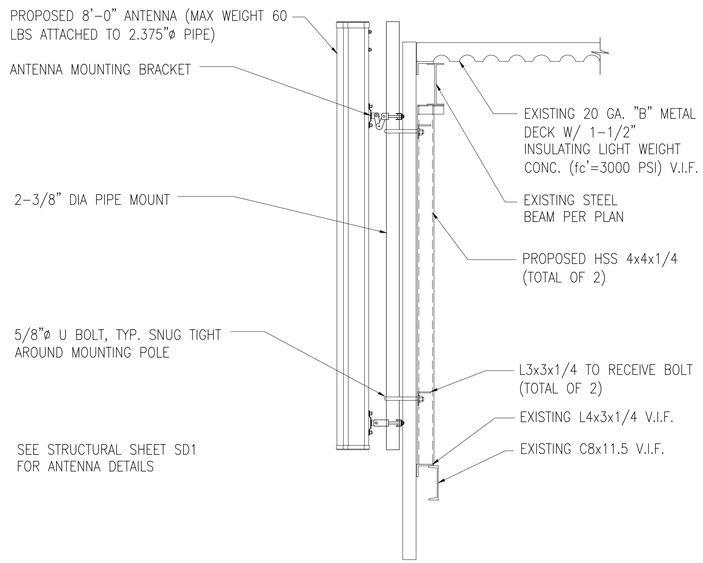

02 ANTENNA ATTACHMENT
SCALE: NTS

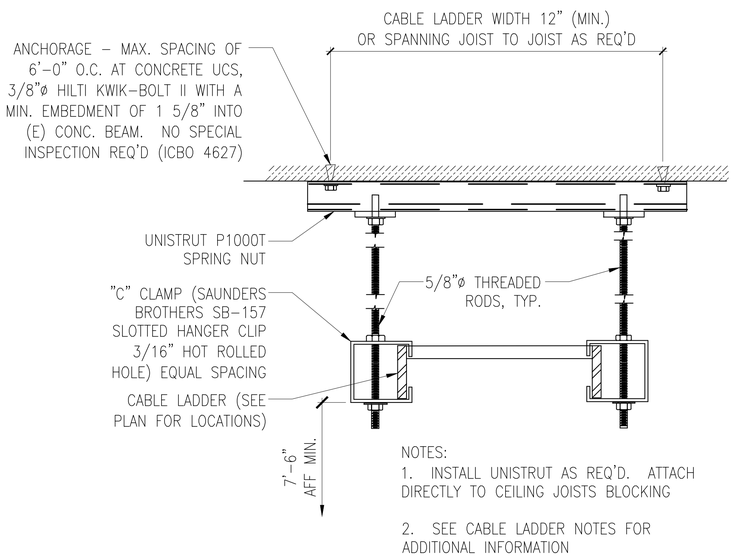

NOTES:
1. INSTALL UNISTRUT AS REQ'D. ATTACH DIRECTLY TO CEILING JOISTS BLOCKING
2. SEE CABLE LADDER NOTES FOR ADDITIONAL INFORMATION

05 CABLE LADDER DETAIL
SCALE: NTS

SPECIFICATIONS	
ANTENNA ANT2 0.6 10 HP	
DIMS (DIAMETER X DEPTH)	ø25.945" x 13.780"
WEIGHT: 33.51 lbs (15.2 Kg) INCLUDING MOUNTING KIT, BUT EXCLUDING PIPE MOUNT	

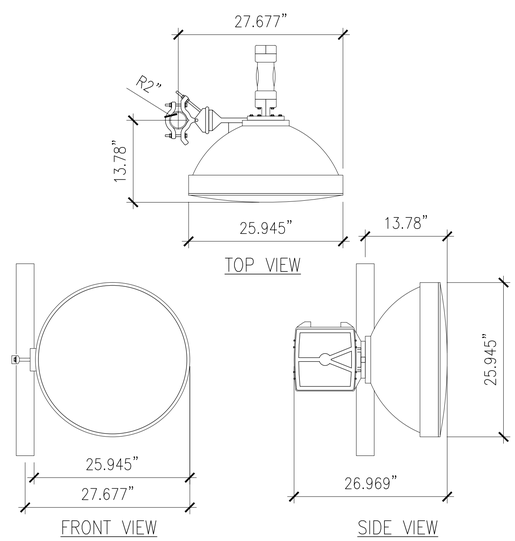

04 MICROWAVE DISH ATTACHMENT
SCALE: NTS

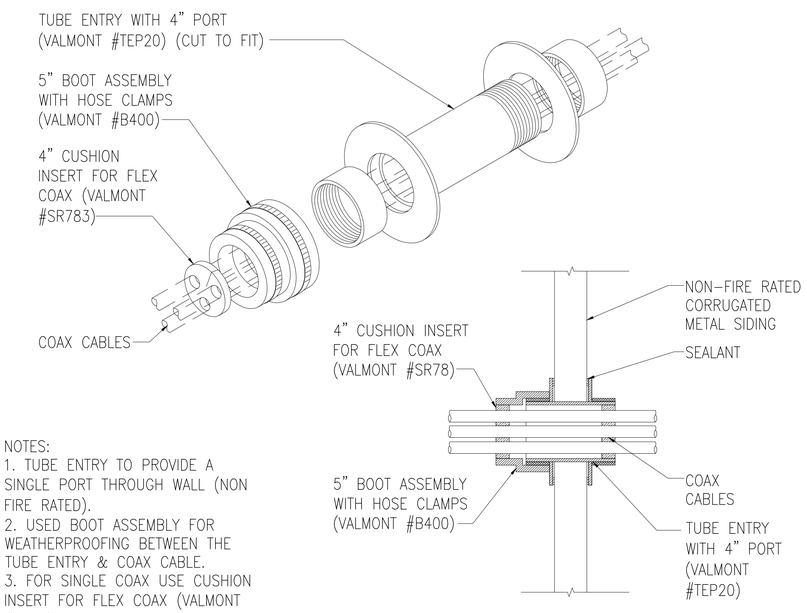

NOTES:
1. TUBE ENTRY TO PROVIDE A SINGLE PORT THROUGH WALL (NON FIRE RATED).
2. USED BOOT ASSEMBLY FOR WEATHERPROOFING BETWEEN THE TUBE ENTRY & COAX CABLE.
3. FOR SINGLE COAX USE CUSHION INSERT FOR FLEX COAX (VALMONT #SR78)

03 CONDUIT PENETRATION DETAIL
SCALE: NTS

[redacted]

EQUIPMENT DETAILS
A4.1

NOTE: ALL INFORMATION IS SUBJECT TO FIELD VERIFICATION. ALL INFORMATION IS CONFIDENTIAL AND NOT FOR PUBLIC DISTRIBUTION WITHOUT EXPRESS CONSENT OF THE LOS ANGELES REGIONAL INTEROPERABLE COMMUNICATIONS SYSTEMS AUTHORITY.

LA-RICS
Los Angeles Regional Interoperable Communications System

COAX COLOR CODE SCHEDULE 2x4 MIMO

ANTENNA	SECTOR	RAU/ PORT	REFERENCE DESIGNATOR	PORT	SECTOR BAND 1 (NEAREST CONNECTION)	BAND 2
ANTENNA 1	A	1 TXRX	A1 Tx/Rx	1 (+45°)	RED	BLUE
ANTENNA 1	A	1 Rxdiv	A1 Rx	2 (−45°)	RED	ORANGE
ANTENNA 2	A	2 Rxdiv	A2 Rx	1 (+45°)	RED	GREEN
ANTENNA 2	A	2 TXRX	A2 Tx/Rx	2 (−45°)	RED	BROWN
ANTENNA 3	B	3 TXRX	B1 Tx/Rx	1 (+45°)	BLUE	BLUE
ANTENNA 3	B	3 RXdiv	B1 Rx	2 (−45°)	BLUE	ORANGE
ANTENNA 4	B	4 RXdiv	B2 Rx	1 (+45°)	BLUE	GREEN
ANTENNA 4	B	4 TXRX	B2 Tx/Rx	2 (−45°)	BLUE	BROWN
ANTENNA 5	C	5 TXRX	C1 Tx/Rx	1 (+45°)	GREEN	BLUE
ANTENNA 5	C	5 RXdiv	C1 Rx	2 (−45°)	GREEN	ORANGE
ANTENNA 6	C	6 RXdiv	C2 Rx	1 (+45°)	GREEN	GREEN
ANTENNA 6	C	6 TXRX	C2 Tx/Rx	2 (−45°)	GREEN	BROWN
GPS1			GPS1		WHITE	
GPS2			GPS2		WHITE	WHITE

COAX COLOR CODE SCHEDULE 2x2 MIMO

ANTENNA	SECTOR	RAU/ PORT	REFERENCE DESIGNATOR	PORT	SECTOR BAND 1 (NEAREST CONNECTION)	BAND 2
ANTENNA 1	A	1 TXRX	A1 Tx/Rx	1 (+45°)	RED	BLUE
ANTENNA 1	A	1 TXRX	A2 Tx/Rx	2 (−45°)	RED	ORANGE
ANTENNA 2	–	–	–	–	RED	GREEN
ANTENNA 2	–	–	–	–	RED	BROWN
ANTENNA 3	B	3 TXRX	B1 Tx/Rx	1 (+45°)	BLUE	BLUE
ANTENNA 3	B	3 TXRX	B2 Tx/Rx	2 (−45°)	BLUE	ORANGE
ANTENNA 4	–	–	–	–	BLUE	GREEN
ANTENNA 4	–	–	–	–	BLUE	BROWN
ANTENNA 5	C	5 TXRX	C1 Tx	1 (+45°)	GREEN	BLUE
ANTENNA 5	C	5 TXRX	C2 Tx/Rx	2 (−45°)	GREEN	ORANGE
ANTENNA 6	–	–	–	–	GREEN	GREEN
ANTENNA 6	–	–	–	–	GREEN	BROWN
GPS1			GPS1		WHITE	
GPS2			GPS2		WHITE	WHITE

NOTES:

1. ALL TRANSMISSION LINES SHALL BE MARKED WITH APPROPRIATE COLOR TAPE BANDS (1" WIDE COLOR TAPE) FOR IDENTIFICATION NEAR ANTENNA, JUST BEFORE ENTERING THE LTE EQUIPMENT AS WELL AS INSIDE THE SHELTER/BUILDING, WITHIN 24" OF THE ENTRY PORT. FOR COLOR CODING SCHEME, REFERENCE TABLE THIS DETAIL. TAPE SHALL BE FADE-RESISTANT, UV-RESISTANT AND CHEMICAL RESISTANT, REFERENCE HH-I-595C.
2. WHERE VISIBILITY END TO END IS NOT POSSIBLE, ADDITIONAL BANDING SHALL BE REQUIRED.
3. ALL JUMPERS SHALL BE MARKED WITH APPROPRIATE COLOR TAPE BANDS ON BOTH ENDS.
4. 1" INCH WIDE COLOR TAPE WITH 3/4" SPACING BETWEEN BANDS.

01 ANTENNA, AND COAX CABLE/COAX SCHEDULE

SCALE: NTS

CABLE	COMMSCOPE MODEL NUMBER	MINIMUM BENDING RADIUS	SIZE
LDF4	LDF4-50A	5"	1/2"
AVA5	AVA5-50FX	10"	7/8"
CNT 400	CNT 400	1"	
CNT 600	CNT 600	1.5"	

02 COAX & JUMPER MINIMUM BENDING RADIUS TABLE

SCALE: NTS

PORT ASSIGNMENTS
A5

NOTE: ALL INFORMATION IS SUBJECT TO FIELD VERIFICATION. ALL INFORMATION IS CONFIDENTIAL AND NOT FOR PUBLIC DISTRIBUTION WITHOUT EXPRESS CONSENT OF THE LOS ANGELES REGIONAL INTEROPERABLE COMMUNICATIONS SYSTEMS AUTHORITY.

LA-RICS
Los Angeles Regional Interoperable Communications System

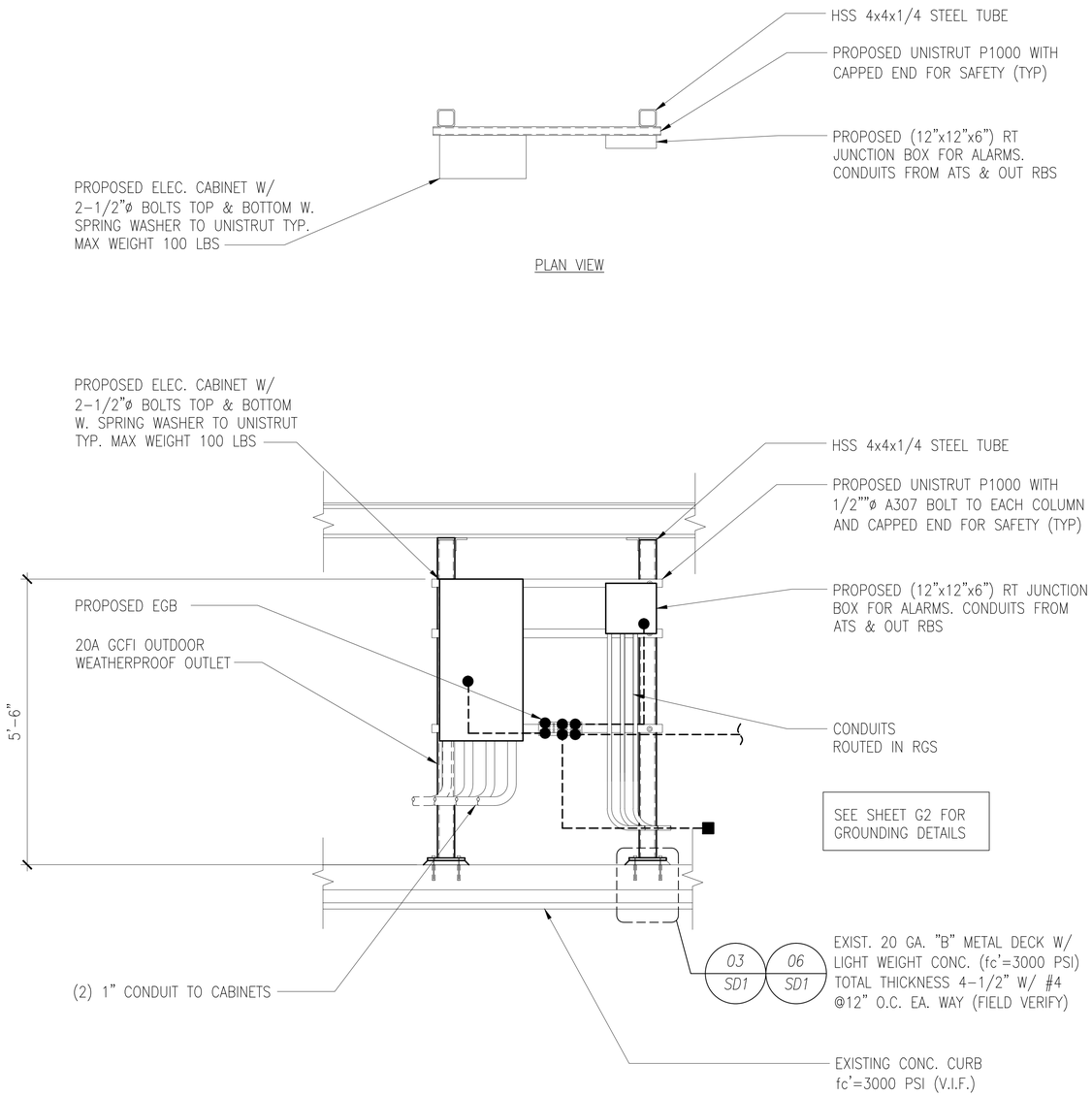

NOTES:

1. NO ZINC HARDWARE TO BE USED

01 H-FRAME DETAIL
SCALE: NTS

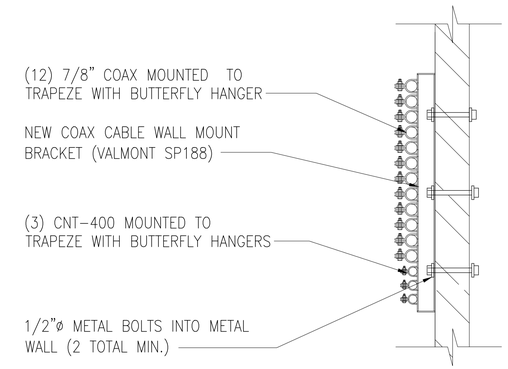

02 VERTICAL COAX CABLE LADDER
SCALE: NTS

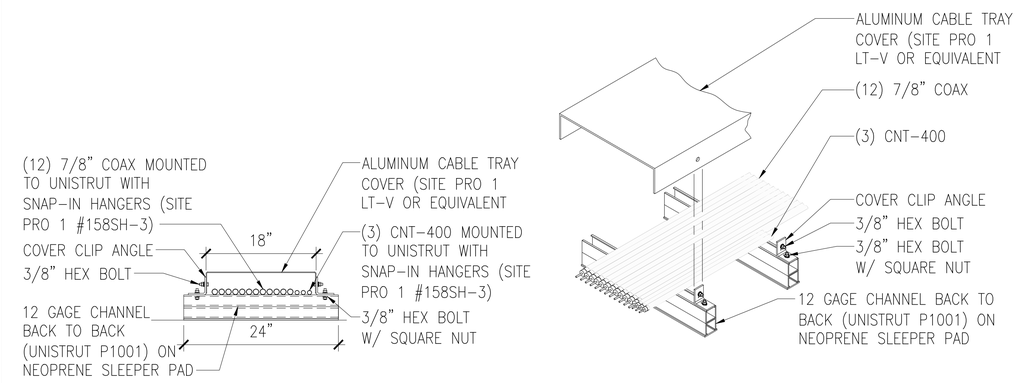

03 COAX CABLE TRAY MOUNTED ON ROOFTOP
SCALE: NTS

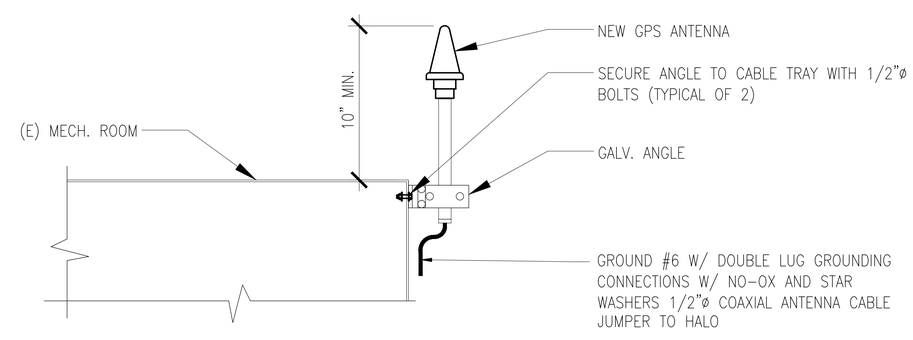

04 GPS WALL ATTACHMENT DETAIL
SCALE: NTS

UTILITY DETAILS
A6

SIGNS:

1. NO TRESPASSING SIGN:

A. THIS SIGN SHOULD BE MADE OF 8½"x11" 60-MIL THICK WHITE PLASTIC.

B. FOR RAW LAND SITES THE SIGN SHOULD BE PLACED ON THE PERIMETER FENCE AT THE GATE LOCATION IF A FENCE IS AVAILABLE. IF THERE IS NO PERIMETER FENCE THE SIGN SHALL BE MOUNTED TO THE EXTERIOR SIDE OF THE ENTRANCE DOOR TO THE SHELTER/EQUIPMENT ROOM. IF A SHELTER IS NOT PLANNED FOR THE SITE, POSTING OF THE SIGN TO BE LOCATED ON THE RBS CABINET DOOR. CENTERED HORIZONTALLY AND 2" BELOW SITE NAME SIGN.

C. THE SIGN SHALL READ: "NO TRESPASSING VIOLATORS WILL BE PROSECUTED"

2. SITE NAME SIGN:

A. THIS SIGN SHOULD BE MADE OF 8½"x11" 60-MIL THICK WHITE PLASTIC.

B. THIS SIGN SHOULD BE PLACED ON THE EXTERIOR SIDE OF THE ENTRANCE DOOR TO THE SHELTER/EQUIPMENT ROOM. IF SHELTER NOT PLANNED FOR THIS SITE, POSTING OF THE SIGN TO BE LOCATED ONT THE RBS CABINET DOOR. CENTER HORIZONTALLY AND 6" FROM THE TOP.

C. THE SIGN SHALL READ:
SITE NAME
FOR EMERGENCY ACCESS, OR
WHEN WORKING ON THIS SITE,
CALL: (XXX) XXX-XXXX

D. THIS SIGN AND THE NO TRESPASSING SIGN MAY BE COMBINED IF THERE IS NO PERIMETER FENCE. THIS SIGN SHOULD BE MADE OF 8½"X11" 60-MIL THICK WHITE PLASTIC.

3. INFORMATION SIGN:

A. THIS SIGN SHOULD BE MADE OF 8½"x11" 60-MIL THICK WHITE PLASTIC.

B. THIS SIGN SHOULD BE PLACED ON THE LEG OF TOWER OR BASE OF MONOPOLE AT EYE LEVEL

4. CAUTION ELECTRICAL SHOCK HAZARD SIGN:

A. THIS SIGN SHOULD BE MADE OF 8½"x11" 60-MIL THICK WHITE PLASTIC. LETTERING AND COLORING SHALL BE PER OSHA 1910.145: REGULATION OF ACCIDENT PREVENTION SIGNS AND TAGS.

B. THIS SIGN SHALL BE POSTED ON THE PPC CABINET DOOR CENTER HORIZONTALLY AND 4" FROM THE TOP.

C. THE SIGN SHALL READ: "CAUTION ELECTRICAL SHOCK HAZARD"

5. RF RADIATION SAFETY SIGNS:

A. RF RADIATION SAFETY SIGNS SHALL BE POSTED AT ALL SITES ON THE FRONT GATE OF ENTRANCE INTO THE SITE. ANY SITE WHERE THE Tx ANTENNA IS LOWER THAN 10 METERS MAY REQUIRE ADDITIONAL SIGNS AND MUST BE HIGHLIGHTED TO SYSTEMS ENGINEERING.

B. RF RADIATION NOTICE SAFETY SIGN SYMBOLS AND COLORING MUST CONFORM TO THE ANSI STANDARD 2535.3 FOR RADIO FREQUENCY ENERGY AND CURRENT FLOW SYMBOLS.

6. DANGER NO SMOKING SIGN:

A. THIS SIGN SHOULD BE MADE OF 8½"x11" 60-MIL THICK WHITE PLASTIC. LETTERING AND COLORING SHALL BE PER OSHA 1910.145: REGULATION OF ACCIDENT PREVENTION SIGNS AND TAGS.

B. THIS SIGN SHALL BE POSTED INSIDE COMPOUND FACING TOWARD SITE

C. THE SIGN SHALL READ: "DANGER NO SMOKING"

D. IF PERIMETER FENCE IS NOT PLANNED, THE SIGN SHALL BE PLACED ON THE FUEL TANK OR ON THE CMU PROTECTIVE WALL.

7. BROADBAND TECHNOLOGY OPPORTUNITIES PROGRAMS (BTOP) SIGNAGE.

A. RECIPIENTS MUST FOLLOW MINIMUM REQUIREMENTS WHEN DEVELOPING RECOVERY ACT DISPLAY SIGNAGE FOR BTOP CONSTRUCTION SITES.

B. RECIPIENTS MUST USE THE PRIMARY EMBLEM OR BroadbandUSA EMBLEM IN CONSTRUCTION SIGNAGE.

C. THE EMBLEM MUST BE AT LEAST 6 IN. OR LARGER IN DIAMETER.

D. RECIPIENTS MUST NOT CHANGE PROPORTIONS OF THE EMBLEM

E. IF USING COLOR EMBLEM, USE THE COLORS SPECIFIED BY NTIA

F. ALWAYS LEAVE CLEAR SPACE SURROUNDING THE LOGO EQUAL TO HALF OF THE LOGO'S RADIUS

SIGN SPECIFICATIONS:

1. THE CONTRACTOR AND OWNER'S REPRESENTATIVE SHALL FIELD VERIFY THE EXISTENCE AND CONDITION OF SIGNS ON CO-LOCATE SITES. ANY SIGNS THAT ARE MISSING OR DETERMINED TO BE IN NEED OF REPLACEMENT SHALL BE FABRICATED AND PLACED IN ACCORDANCE WITH THE FOLLOWING SPECIFICATIONS UNLESS OSHA APPROVED STANDARD SIGNS CAN BE USED.

2. ALL SIGNS SHOULD BE UV-RESISTANT FOR OUTDOOR USE.

3. ALL SIGNS SHOULD HAVE A MINIMUM 5-YEAR GUARANTEE WITHOUT SHOWING ANY SIGNS OF DEGRADATION.

4. LL SIGNS SHALL HAVE ROUNDED CORNERS AND WEATHER PROOF PRESSURE SENSITIVE ADHESIVE BACKING FOR MOUNTING PURPOSES.

5. ALL SIGNS SHALL BE PROVIDED PER THE REQUIREMENTS CONTAINED IN THIS DRAWING PACKAGE.

6. ALL SIGN LETTERS SHALL BE PRINTED OR ENGRAVED, NO STICKERS.

7. COLOR UNLESS NOTED OTHERWISE: BLACK LETTERING ON WHITE BACKGROUND. EXCEPTION: "DANGER" AND "CAUTION" SIGNS TO HAVE RED LETTERING ON WHITE BACKGROUND.

8. CONTRACTOR MUST VERIFY ALL SITE SIGNAGE WITH CONSTRUCTION PROJECT MANAGER PRIOR TO ORDERING ANY SIGNS.

9. THE CONTRACTOR WITH FURNISH AND INSTALL THESE SIGNS IN APPROPRIATE LOCATIONS, INCLUDING BUT NOT LIMITED TO; ON THE EXTERIOR OF ALL SIDES OF THE SHELTER AND FENCE.

10. THE CONTRACTOR WILL INSTALL ALL SIGNS IN A MANNER TO RESIST DETACHMENT FROM WIND-LIFT AND HARSH WEATHER (e.g., INTENSE HEAT, RAIN AND ICY CONDITIONS).

01 **SITE SIGNAGE DETAILS**
SCALE: NTS

NOTE: ALL INFORMATION IS SUBJECT TO FIELD VERIFICATION. ALL INFORMATION IS CONFIDENTIAL AND NOT FOR PUBLIC DISTRIBUTION WITHOUT EXPRESS CONSENT OF THE LOS ANGELES REGIONAL INTEROPERABLE COMMUNICATIONS SYSTEMS AUTHORITY.

LA-RICS
Los Angeles Regional Interoperable Communications System

MOTOROLA SOLUTIONS

SITE SIGNAGE DETAILS
A7

LA-RICS
Los Angeles Regional Interoperable Communications System

GENERAL NOTES

1. THE CONTRACTOR SHALL VERIFY ALL DIMENSIONS, ELEVATIONS, SITE CONDITIONS PRIOR TO STARTING CONSTRUCTION. THE ARCHITECT AND STRUCTURAL ENGINEER SHALL BE NOTIFIED OF ANY DISCREPANCIES OR INCONSISTENCIES.

2. THE ARCHITECT AND STRUCTURAL ENGINEER SHALL BE NOTIFIED OF ANY CONFLICTS OR OMISSIONS BETWEEN THE WORKING DRAWINGS OR SPECIFICATIONS BEFORE PROCEEDING ANY WORK SO AFFECTED. A CLARIFICATION SHALL BE ISSUED FOR SUCH CONFLICTS. ANY WORK PERFORMED IN CONFLICT WITH THE CONTRACT DOCUMENTS OR ANY CODE REQUIREMENTS SHALL BE CORRECTED BY THE ARCHITECT AND STRUCTURAL ENGINEER

3. THE STRUCTURAL DRAWINGS AND SPECIFICATIONS FOR CONSTRUCTION REPRESENT THE FINISHED STRUCTURE. THEY DO NOT INDICATE THE METHOD OF CONSTRUCTION. THE CONTRACTOR SHALL PROVIDE ALL MEASURES NECESSARY TO PROTECT THE STRUCTURE DURING CONSTRUCTION. SUCH MEASURES INCLUDE, BUT NOT LIMITED TO, BRACING, SHORING, TO INSURE THE VERTICAL AND LATERAL STABILITY OF THE STRUCTURE. OBSERVATION VISITS TO THE SITE BY THE ARCHITECT AND STRUCTURAL ENGINEER SHALL NOT INCLUDE INSPECTION OF THE ABOVE ITEMS AND DOES NOT RELIEVE THE CONTRACTOR'S RESPONSIBILITIES.

4. THE CONTRACTOR SHALL BE SOLELY RESPONSIBLE FOR CONFORMING TO ALL LOCAL, STATE AND FEDERAL SAFETY AND HEALTH STANDARDS, LAWS AND REGULATIONS. THE ARCHITECT AND STRUCTURAL ENGINEER WILL NOT ENFORCE SAFETY MEASURES OR REGULATIONS.

5. NOTES AND DETAILS ON THE DRAWINGS SHALL TAKE PRECEDENCE OVER THE GENERAL NOTES AND TYPICAL DETAILS. DIMENSIONS SHALL TAKE PRECEDENCE OVER SCALES SHOWN ON THE DRAWINGS IN CASE OF CONFLICT.

6. ALL WORKS SHALL CONFORM TO THE STANDARDS OF THE 2013 CALIFORNIA BUILDING CODE.

7. A.S.T.M. SPECIFICATIONS NOTED ON THE DRAWINGS SHALL BE OF THE LATEST REVISION.

8. NO STRUCTURAL SUBSTITUTIONS OR CHANGES SHALL BE MADE IN THE FIELD. WRITTEN APPROVAL MUST BE OBTAINED FROM THE STRUCTURAL ENGINEER AND OSHPD FOR ANY SUBSTITUTIONS OR CHANGES FROM THE APPROVED CONSTRUCTION DOCUMENTS.

9. CONTRACTOR SHALL PROVIDE AND BE RESPONSIBLE FOR THE PROTECTION AND REPAIR OF ADJACENT EXISTING SURFACES AND AREAS WHICH MAY BE DAMAGED AS A RESULT OF NEW WORK.

DESIGN LOADS

1. LIVE LOAD PER CBC 2013,

   EXISTING PENTHOUSE FLOOR LIVE LOAD (UNIFORM) = 50 PSF

2. DEAD LOAD

   EXISTING PENTHOUSE FLOOR DEAD LOAD = 42 PSF

3. SEISMIC DESIGN PARAMETERS

   BUILDING OCCUPANCY CATEGORY II
   SEISMIC IMPORTANCE FACTOR, I = 1.0
   SITE CLASS "D"
   DESIGN SPECTRAL RESPONSE ACCLERATION (0.2 SEC.),
   S_{DS} = 1.639g

4. WIND DESIGN PARAMETERS

   EXPOSURE "C"
   WIND SPEED: 110 MPH

CONCRETE:

1. ALL WORKS OF CONCRETE CONSTRUCTION SHALL CONFORM TO C.B.C. CHAPTER 19.
2. CONCRETE MIXES SHALL BE DESIGNED BY A QUALIFIED TESTING LABORATORY AND STRENGTH TEST REPORT SHALL BE SUBMITTED AND APPROVED BY THE STRUCTURAL ENGINEER.
3. THE MINIMUM COMPRESSIVE STRENGTH OF CONCRETE AT 28 DAYS TO BE AS FOLLOWS:

   CONCRETE PAD: 4000 PSI

4. PORTLAND CEMENT SHALL CONFORM TO ASTM C-150 TYPE II.
5. AGGREGATE SHALL COMFORM TO ASTM C 33 FOR NORMAL WEIGHT CONCRETE AND SHALL CONFORM TO C 330 FOR LIGHT WEIGHT CONCRETE.
6. ADMIXTURES IF USED SHALL CONFORM TO ACI 318-11 SECTION 3.6.
7. DRY PACK SHALL CONSIST OF ONE PART OF PORTLAND CEMENT AND TWO AND ONE HALF PARTS OF SAND.

REINFORCING STEEL

1. BAR REINFORCEMENT SHALL CONFORM TO THE FOLLOWING GRADES OF ASTM A 615, INCLUDING SUPPLEMENT S1:

   GRADE 40 – #3 AND SMALLER
   GRADE 60 – #4 AND LARGER

2. DETAILS OF REINFORCEMENT SHALL BE IN ACCORDANCE WITH CHAPTER 7 OF THE A.C.I. 318-11 U.N.O.
3. LAPS AT BAR SPLICES IN CONCRETE CONSTRUCTION SHALL BE IN ACCORDANCE WITH CHAPTER 12 OF THE A.C.I. 318-11 U.N.O.
4. LAPS AT BAR SPLICES IN MASONRY CONSTRUCTION SHALL BE 40 BAR DIAMETERS BUT NOT LESS THAN 2'-0" UNLESS OTHERWISE NOTED.
5. VERTICAL REINFORCEMENT SHALL BE TIED IN POSITION AT THE TOP AND BOTTOM AND AT INTERMEDIATE LOCATIONS, SPACED NOT GREATER THAN 192 BAR DIAMETERS.
6. ALL REINFORCEMENT SHALL BE SECURELY TIED IN PLACE PRIOR PLACING CONCRETE OR GROUT.
7. WELDING OF CROSSING BARS AND TACK WELDING OF REINFORCEMENT SHALL NOT BE PERMITTED.

STRUCTURAL STEEL:

1. MATERIAL AND WORKMANSHIP SHALL CONFORM TO A.I.S.C. SPECIFICATIONS FOR DESIGN, FABRICATION AND ERECTION OF STRUCTURAL STEEL FOR BUILDINGS, LATEST EDITION.
2. STRUCTURAL STEEL SHALL COMPLY WITH THE FOLLOWING U.N.O.:

   STRUCTURAL TUBES A500, GRADE B
   STEEL ANGLES, PLATES & MISC. METALS A36
   UNFINISHED BOLTS A307

3. BOLTS AND NUTS SHALL CONFORM TO THE FOLLOWING U.N.O.:

	ASTM SPECIFICATION		
TYPE	USE	BOLTS	NUTS
MACHINE BOLTS	AS SPECIFIED	A 307 GRADE A	HEX GRADE A
ANCHOR BOLTS	ANCHOR	A 307 GRADE A	HEX GRADE A

4. PROVIDE FULL BEARING ON UNTHREADED PORTION OF SHANK FOR BOLTS AT ALL STEEL MEMBER CONNECTIONS U.N.O.
4. WELDS SHALL BE MADE ONLY BY CERTIFIED WELDERS AS PRESCRIBED IN THE STANDARD CODE FOR WELDING IN BUILDING CONSTRUCTION OF THE AMERICAN WELDING SOCIETY.
5. WELDING ELECTRODES: LOW HYDROGEN E-70XX SERIES PER A.W.S. D1-1, UNLESS NOTED OTHERWISE.
6. ALL FIELD WELDING AND HIGH STRENGTH BOLTING SHALL BE UNDER CONTINUOUS SPECIAL INSPECTION.
7. ALL EXPOSED STEEL ITEMS TO BE GALVANIZED AND SHALL BE COATED IN ACCORDANCE WITH ASTM A 123 WITH A MINIMUM OF TWO AND HALF OUNCES OF ZINC PER SQ. FT.

EXPANSION ANCHOR BOLTS

1. ALL FIELD INSTALLED CONCRETE EXPANSION ANCHORS SHALL BE HILTI KB STAINLESS STEEL ANCHORS.
2. ALL ANCHORS SHALL BE TESTED BASED ON THE FOLLOWING CRITERIA:

ANCHOR TYPE	TORQUE	ICC-ES ESR#
1/2"ø HILTI KB TZ ANCHOR	40 FT-LBS	1917
3/4"ø HILTI KB TZ ANCHOR	110 FT-LBS	1917

MINIMUM ANCHOR EMBEDMENT SHALL BE 3-1/4" FOR 1/2"ø AND 4-3/4" FOR 3/4"ø

WHEN INSTALLING DRILLED-IN ANCHORS AND/OR POWDER DRIVEN PINS IN EXISTING NON-PRESTRESSED REINFORCED CONCRETE, USE CARE AND CAUTION TO AVOID CUTTING OR DAMAGING THE EXISTING REINFORCING BARS OR EMBEDED PIPES AND CONDUITS IN THE SLAB BY USING A NON DESTRUCTIVE METHOD PRIOR TO INSTALLATION WHEN INSTALLING THEM INTO PRESTRESSED CONCRETE (PRE OR POST TENSIONED) LOCATED THE PRESTRESSED TENDONS BY USING A NON DESTRUCTIVE METHOD PRIOR TO INSTALLATION. EXERCISE EXTREME CARE AND CAUTION TO AVOID CUTTING OR DAMAGING THE TENDONS DURING INSTALLATION.

MAINTAIN 1" MINIMUM CLEARANCE BETWEEN EXISTING REINFORCEMENT AND THE EPOXY ANCHOR

APPLY PROOF TEST LOADS TO EPOXY ANCHORS WITHOUT REMOVING THE NUT IF POSSIBLE. OTHERWISE, REMOVE THE NUT AND INSTALL A THREADED COUPLER UP TO THE SAME TIGHTNESS OF THE ORIGINAL NUT USING A TORQUE WRENCH AND APPLY THE LOAD.

TESTING SHOULD OCCUR A MINIMUM 24 HOURS AFTER INSTALLATION OF THE SUBJECTED ANCHORS. IF THE MANUFACTURER'S RECOMMENDED INSTALLATION TORQUE IS LESS THAN THE TEST TORQUE, THE MANUFACTURER'S RECOMMANDED INSTALLATION TORQUE SHOULD BE USED IN LIEU OF THE TEST TORQUE. ANCHOR DIAMETER REFERS TO THE THREAD SIZE.

REACTION LOADS FROM TEST FIXTURES MAY BE APPLIED CLOSE TO THE ANCHOR BEING TESTED. PROVIDE THE ANCHOR IS NOT RESTRAINED FROM WITHDRAWING BY THE FIXTURE.

TEST EQUIPMENT INCLUDING TORQUE WRENCHES SHALL BE CALIBRATED BY AN APPROVED TESTING LABORATORY IN ACCORDANCE WITH STANDARD RECOGNIZED PROCEDURES.

TEST METHODS; THE FOLLOWING CRITERIA APPLY FOR THE ACCEPTANCE OF INSTALLED ANCHORS:
A). HYDRAULIC RAM METHOD:
ANCHORS TESTED WITH A HYDRAULIC JACK OR SPRING LOADED DEVICES SHALL MAINTAN THE TEST LOAD FOR MINIMUM OF 15 SECONDS AND SHALL EXHIBIT NO DISCERNABLE MOVEMENT DURING THE TENSION TEST, e.g., AS EVIDENCED BY LOOSENING OF THE WASHER UNDER NUT.
B). TORQUE WRENCH METHOD:
ANCHORS TESTED WITH A CALIBRATED TORQUE WRENCH MUST ATTAIN THE SPECIFIED TORQUE WITHIN ½ TURN OF THE NUT.
EXCEPTIONS:
1. WEDGDE OR SLEEVE TYPE:
ONE-QUARTER (¼) TURN OF THE NUT FOR A ⅜ IN. SLEEVE ANCHOR ONLY.
2. THREADED TYPE:
ONE QUARTER (¼) TURN OF THE SCREW AFTER INITIAL SEATING OF THE SCREW HEAD.

TESTING SHOULD OCCUR 24 HOURS MINIMUM AFTER INSTALLATION OF THE EPOXY ANCHOR.

MINIMUM OF 50% OF THE INSTALLED ANCHOR SHALL BE TESTED. (ALTERNATE ANCHORS IN ANY GROUP ARRANGEMENT) IF ANY ANCHOR FAILS TESTING, TEST ALL ANCHORS OF THE SAME TYPE, INSTALLED BY THE SAME TRADE, NOT PREVIOUSLY TESTED UNTIL TWENTY (20) CONSECUTIVE ANCHORS PASS, THEN RESUME THE INITIAL TEST FREQUENCY. TESTS SHALL BE PERFORMED PER CBC 2013, 1913A.7.

ALL TESTS SHALL BE PERFORMED IN THE PRESENCE OF THE INSPECTOR OF RECORD.

EPOXY ANCHOR BOLTS

1. ALL EPOXY ANCHORS SHALL BE HILT-HY 150 MAX-SD: (INSTALLED IN NORMAL WEIGHT CONCRETE WITH MIN. fc' = 4000 PSI)

ANCHOR TYPE	ICC-ES ESR#
#4 BAR	3013

ALL HILTI HIT HY 150 MAX-SD ANCHORS SHALL BE TESTED BASED ON THE FOLLOWING CRITERIA:

ANCHOR TYPE	PULL OUT LOAD	ICC-ES ESR#
#4 BAR	2922 LBS	3013

ANCHOR EMBEDMENT SHALL BE 2.5" FOR #4 BAR

2. A HYDRAULIC CYLINDER SHALL BE USED TO APPLY THE TENSION LOAD TO THE ANCHOR WITH THE CYLINDER SUPPORTED ON A LOADING PLATE HAVING A HOLE DIAMETER EQUAL TO 1.5 TO 2 TIMES THE ANCHOR HOLE DIAMETER (CONFINED CONFIGURATION) UNLESS OTHERWISE APPROVED BY OSHPD.
3. ANCHORS SHALL MAINTAIN THE TEST LOAD FOR A MINIMUM OF 15 SECONDS AND SHALL EXHIBIT NO DISCEMABLE MOVEMENT DURING THE TENSION TEST, E.G., AS EVIDENCED BY LOOSENING OF THE WASHER UNDER THE NUT OR BY CONTINUOUS LOSS OF JACKING PRESSURE. WHERE OTHER THAN BOND IS BEING TESTED, THE TESTING DEVICE SHALL NOT RESTRICT THE CONCRETE SHEAR CONE TYPE FAILURE MECHANISM FROM OCCURRING.

GENERAL NOTES
S1

LA-RICS
Los Angeles Regional Interoperable Communications System

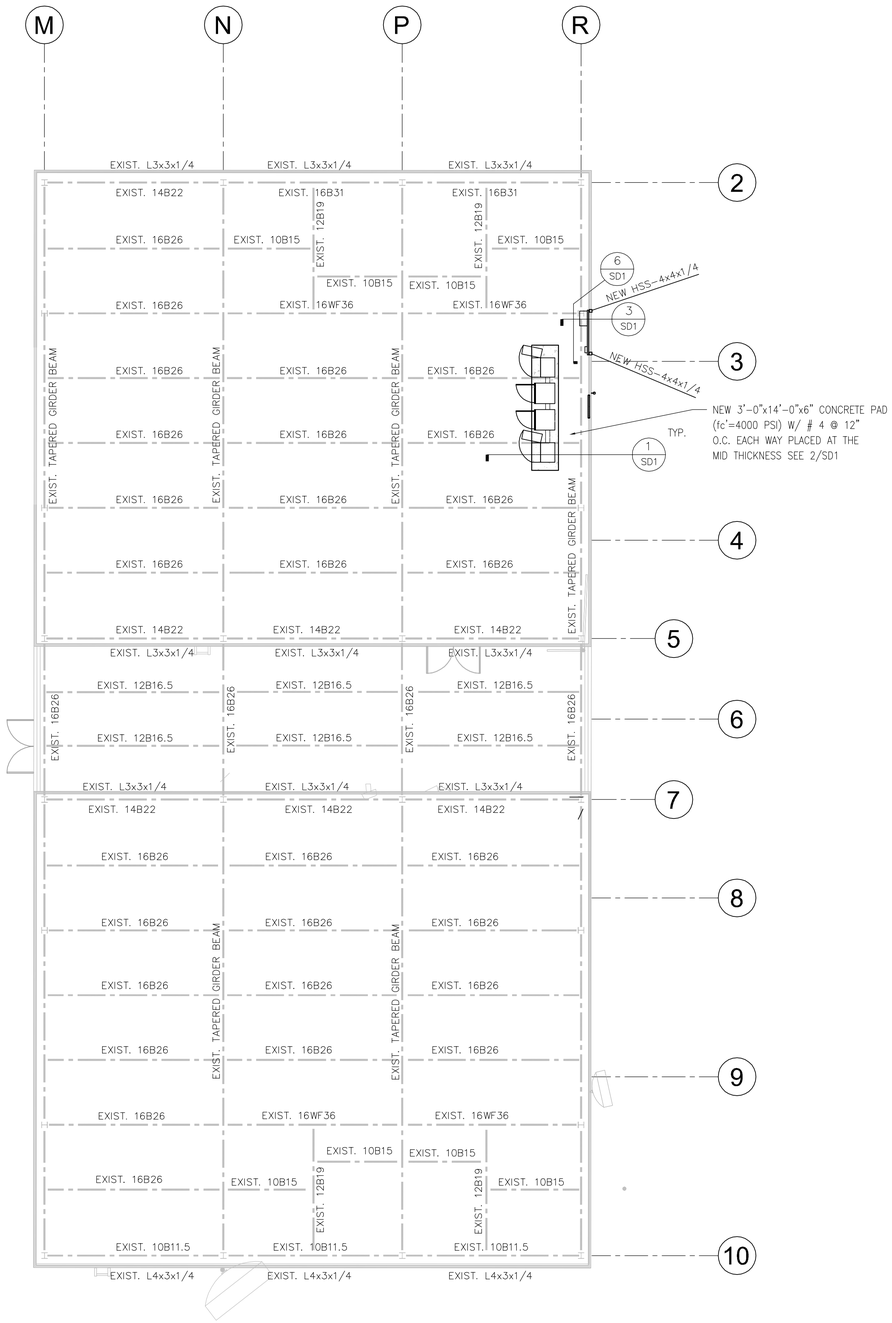

EXISTING PENTHOUSE FLOOR FRAMING PLAN

SCALE: 1/8"=1'-0"

North

GENERAL NOTE

1. DO NOT SCALE THESE DRAWINGS. ALL DIMENSIONS MUST BE VERIFIED WITH ARCHITECTURAL DRAWINGS. IN CASE OF DISCREPANCIES STRUCTURAL ENGINEER MUST BE NOTIFIED IN WRITING.
2. ALL EXISTING MEMBER SIZES, SPACING, & DIMENSIONS MUST BE FIELD VERIFIED. IN CASE OF DISCREPANCIES STRUCTURAL ENGINEER MUST BE NOTIFIED IN WRITING.

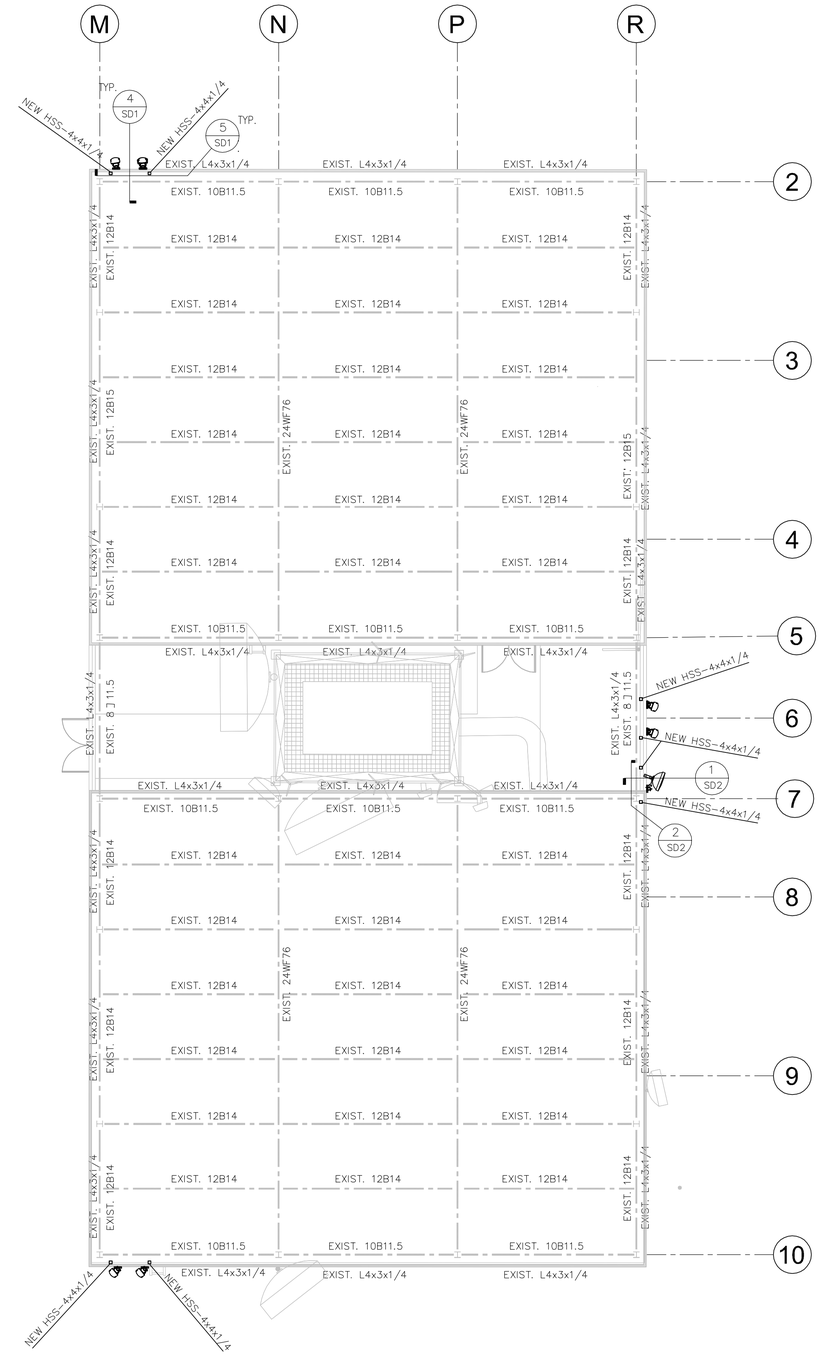

EXISTING PENTHOUSE ROOF FRAMING PLAN

SCALE: 1/8"=1'-0"

North

EXISTING PENTHOUSE FRAMING PLAN

S2

LA-RICS
Los Angeles Regional Interoperable Communications System

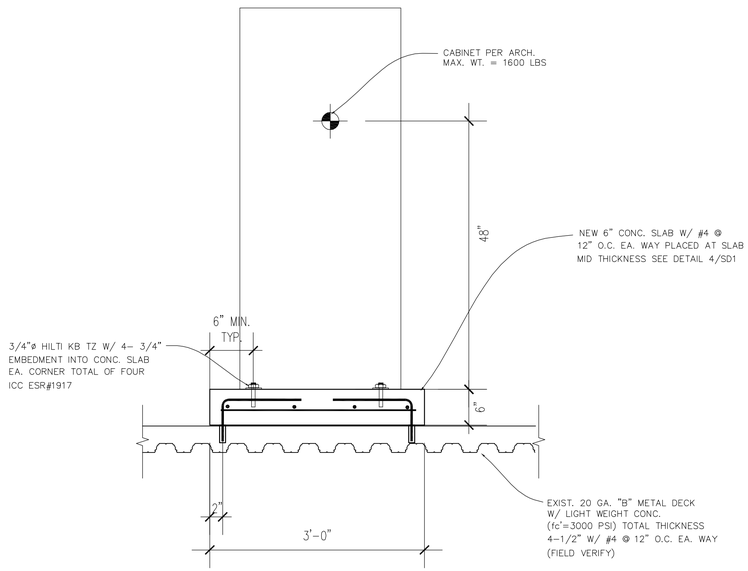

1 EQUIPMENT ANCHORAGE DETAIL
SCALE: N.T.S.

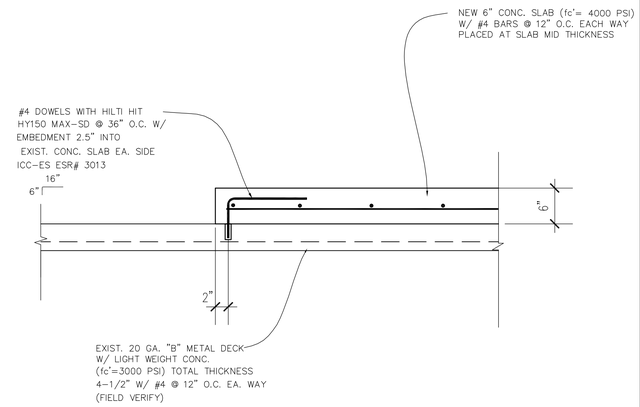

NOTES:
CONTRACTOR TO X-RAY EXISTING SLAB TO LOCATE EXISTING REINFORCEMENT
USE EXTRA CAUTION TO AVOID CUTTING ANY OF THOSE REINFORCEMENT WHEN DRILL TO INSTALL NEW EPOXY DOWELS

2 NEW CONCRETE SLAB
SCALE: N.T.S.

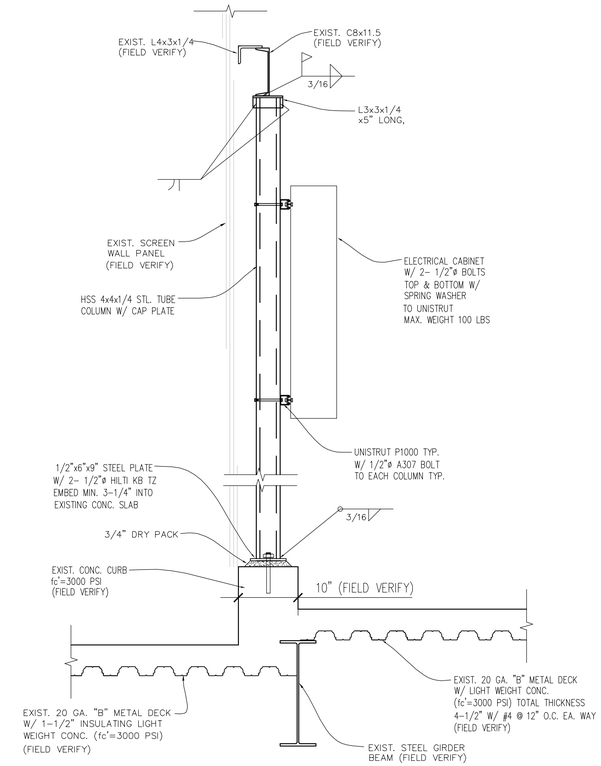

3 WALL HUNG ELECTRICAL CABINETS SUPPORT
SCALE: N.T.S.

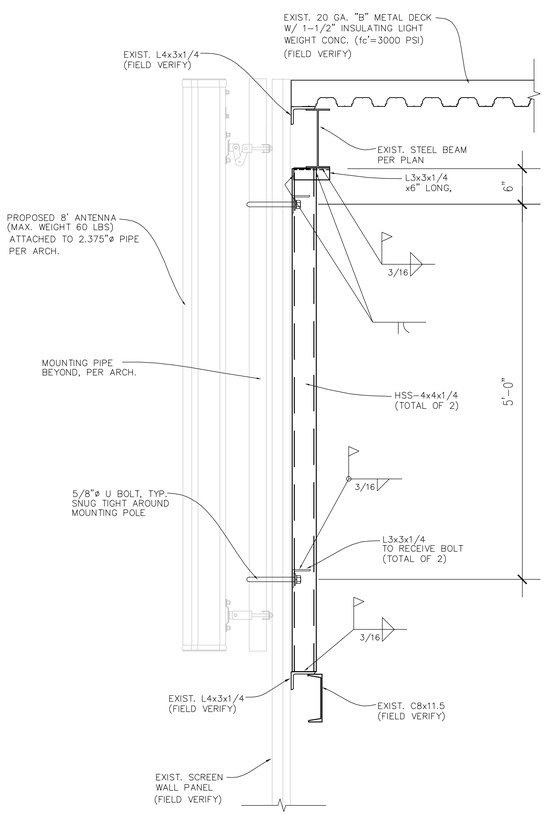

4 NEW SUPPORT FOR ANTENNA
N.T.S.

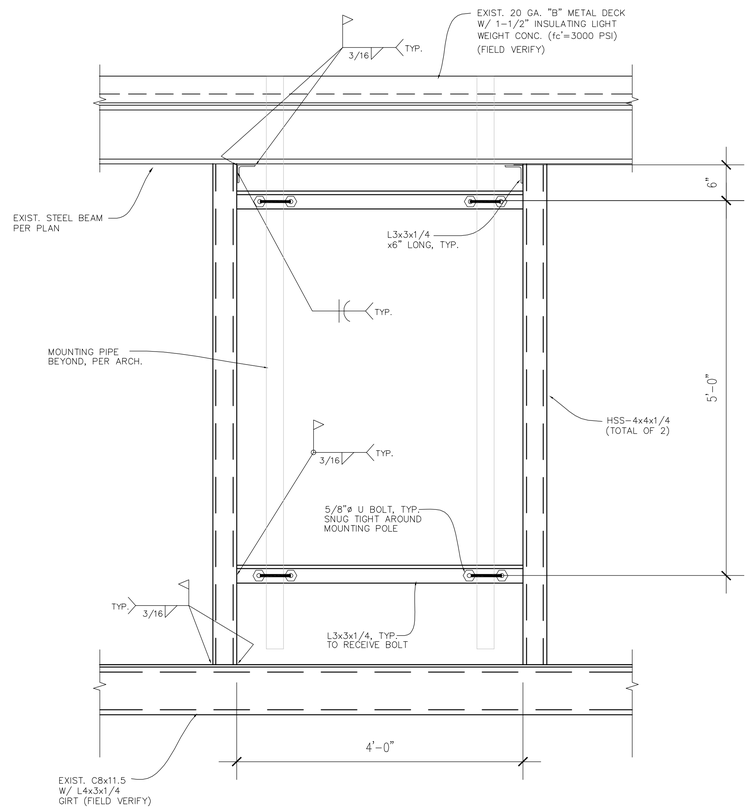

5 NEW SUPPORT FOR ANTENNA
N.T.S.

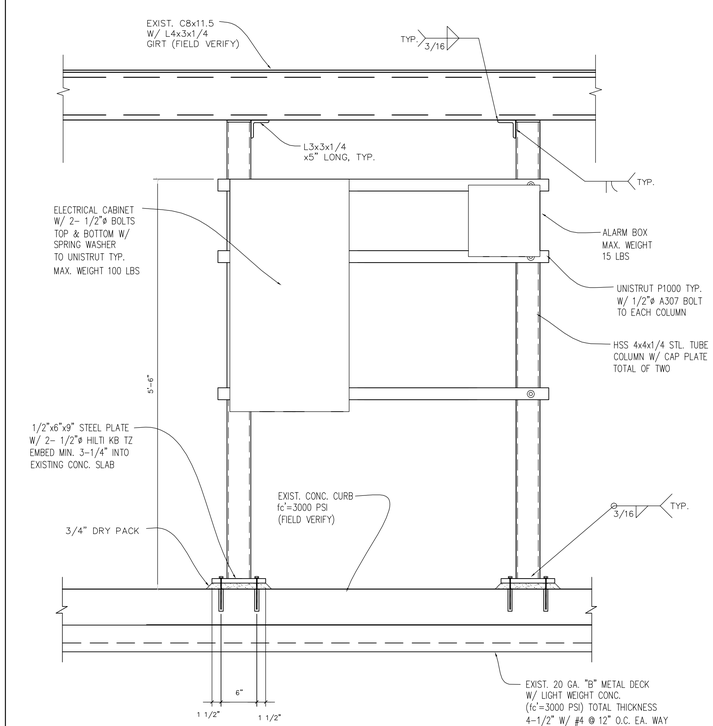

6 WALL HUNG ELECTRICAL CABINETS SUPPORT
SCALE: N.T.S.

STRUCTURAL DETAILS
SD1

LA-RICS
Los Angeles Regional Interoperable Communications System

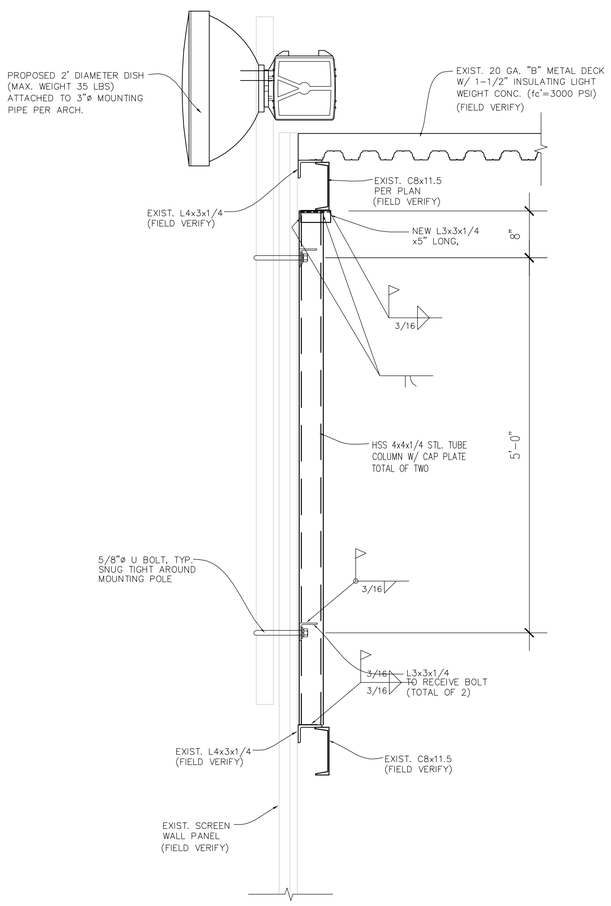

1 NEW SUPPORT FOR MICROWAVE ANTENNA
N.T.S.

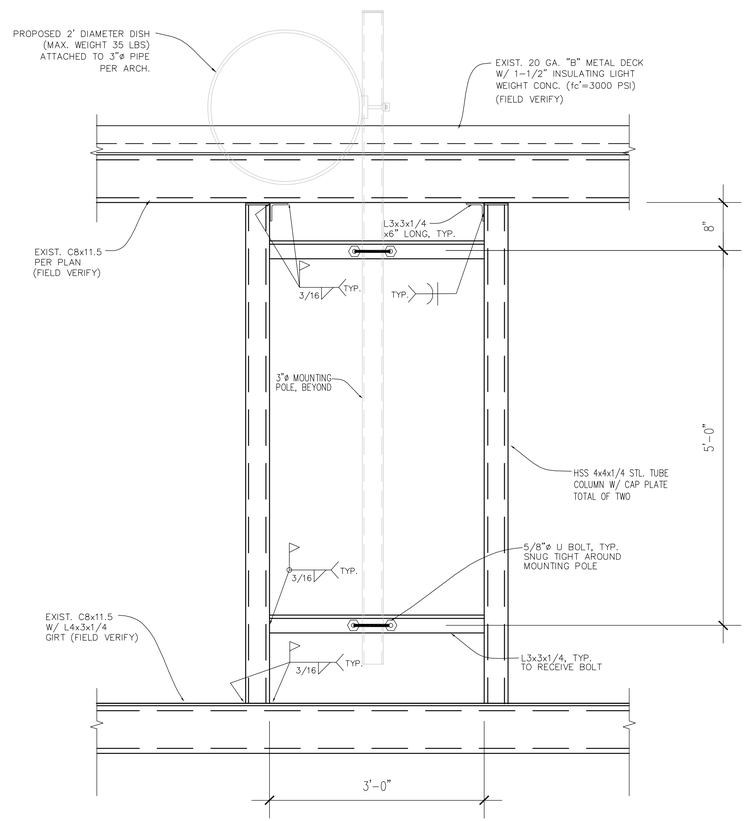

2 NEW SUPPORT FOR MICROWAVE ANTENNA
N.T.S.

STRUCTURAL DETAILS
SD2

LA-RICS
Los Angeles Regional Interoperable Communications System

ELECTRICAL SPECIFICATIONS:

GENERAL:

A. CONTRACTOR SHALL PROVIDE ALL ITEMS OF LABOR AND MATERIALS TO MAKE A COMPLETE INSTALLATION OF ELECTRICAL WORK, AS SHOWN ON DRAWINGS, AS SPECIFIED, AND AS NECESSARY FOR COMPLETE SYSTEMS, INCLUDING, BUT NOT LIMITED TO THE FOLLOWING:

1. MAIN POWER BRANCH/FEEDERS AS REQUIRED.
2. BRANCH FEEDER FOR POWER AND LIGHTING.
3. ALL ELECTRICAL CONDUCTORS AND CONDUIT.
4. ALL WIRING DEVICES, SAFETY SWITCHES.
5. ALL LIGHTING FIXTURES AND LAMPS.
6. ALL COMMUNICATION EMPTY CONDUIT SYSTEMS.
7. LIGHTING SURGE PROTECTION DEVICE.
8. ANTENNA AND EQUIPMENT GROUNDING.
9. APPURTENANCES
10. POWER STUDY

ELECTRICAL REQUIREMENTS:

A. ALL WORK SHALL BE DONE IN ACCORDANCE WITH ALL LOCAL AND NATIONAL ELECTRICAL CODES.
B. ALL WORK SHALL BE COMPLETED BY A CERTIFIED MASTER ELECTRICIAN.
C. ALL WORK SHALL CONFORM TO THE LATEST VERSION OF [redacted] STANDARDS.
D. AFTER INSTALLATION TEST ALL CONDUCTORS FOR SHORTS AND GROUNDS BEFORE ENERGIZING.

GUARANTEE:

A. THE CONTRACTOR SHALL FURNISH A WRITTEN CERTIFICATE, GUARANTEEING ALL MATERIALS, EQUIPMENT AND LABOR FURNISHED BY THE CONTRACTOR TO BE FREE OF ALL DEFECTS FOR A PERIOD OF ONE YEAR FROM AND AFTER THE DATE OF FINAL ACCEPTANCE OF ELECTRICAL WORK. THE CONTRACTOR SHALL FURTHER GUARANTEE THAT IF DEFECTS APPEAR WITHIN THE STIPULATED GUARANTEE PERIOD, SUCH WORK SHALL BE REPLACED WITHOUT COST TO OWNER.

FEEDERS, SWITCHES, METERING EQUIPMENT:

A. MAKE ARRANGEMENTS WITH OWNERS AS NEEDED TO BRING IN BRANCH FEEDERS FOR ELECTRICAL SERVICE AS SHOWN ON DRAWINGS. PAY ALL CHARGES INVOLVED THEREWITH. FURNISH INSTALL FEEDER WIRE TO OWNER DISTRIBUTION PANEL. PROVIDE METER AS SHOWN ON DRAWINGS.

PANEL BOARD CONSTRUCTION:

A. PANEL BOARDS SHALL CONSIST OF A CAN, FRONT, INTERIOR AND CIRCUIT PROTECTIVE DEVICES AND SHALL BE MANUFACTURED IN ACCORDANCE WITH UNDERWRITER'S LABORATORIES. THE GAUGE OF METAL USED AND THE GUTTER SPACE SHALL BE IN ACCORDANCE WITH APPLICABLE UL STANDARDS. EACH PANEL SHALL HAVE A DOOR MOUNTED ON A SEMI-CONCEALED HINGES WITH A CYLINDER LOCK, INDEX CARD HOLDER PROPERLY FILLED IN AS TO CIRCUIT; ALL PANELS WITH MASTER KEY. ALL PANELS SHALL BE FURNISHED WITH BAKED ON GRAY ENAMEL, OVER RUST INHIBITOR COAT. PANEL BOARDS SHALL BE AS MANUFACTURED BY G.E. ITE, SQUARE "D" OR CUTLER HAMMER.

WIRING:

A. ALL CONDUCTORS SHALL BE MADE OF SOFT-DRAWN ANNEALED COPPER WITH CONDUCTIVITY NOT LESS THAN THAT OF 90% PURE COPPER. ALL WIRE SIZE #10 AWG AND SMALLER SHALL BE STRANDED CONDUCTOR TYPE; ALL #8 AWG AND LARGER SHALL BE STRANDED CONDUCTOR TYPE.

B. CONDUCTORS SHALL BE TYPE "THHN/THWN" INSULATION.

C. USE THE FOLLOWING COLOR CODES:

120V/208V	SYSTEMS	120/240V	SYSTEMS
PHASE A	RED	PHASE A	RED
PHASE B	BLACK	PHASE B	BLACK
PHASE C	BLUE	PHASE C	BLUE
NEUTRAL	WHITE	NEUTRAL	WHITE
GROUND	GREEN	GROUND	GREEN

D. WHEN SUB-METERING FROM EXISTING SERVICE, ELECTRICIAN SHALL VERIFY AND COORDINATE WITH FACILITIES THE EXISTING PHASING AND COLOR CODE TO ENSURE CONSISTENCY.

E. INSTALL CONDUCTORS IN CLEAN, DRY CONDUITS, USE UL APPROVED PULLING LUBRICANT WHERE REQUIRED.

F. USE #12 AS MINIMUM CONDUCTOR SIZE FOR POWER SYSTEMS. ALL CONTROL WIRES SHALL BE STRANDED AND TERMINATED WITH CRIMPED-ON LUGS.

G. MAKE CONNECTION, SPLICES AND TAPS ONLY IN APPROVED BOXES AND FITTINGS. FOR SMALL BRANCH CIRCUIT CONDUCTORS, FIRST TWIST CONDUCTORS TOGETHER, THEN INSTALL A "SCOTCHLOK" OR EQUAL SPRING CONNECTOR OF PROPER SIZE. FOR LARGE CONDUCTORS USE SPLIT-BOLT OR HYDRAULICALLY COMPRESSED CONNECTIONS, THEN APPLY ENOUGH LAYERS OF VINYL ELECTRICAL TAPE TO EQUAL THE INSULATION VALUE OF THE CONDUCTOR INSULATION.

H. WHERE FACTORY COLOR CODED CONDUCTORS ARE NOT AVAILABLE, INSTALL BANDS OF COLORED VINYL PLASTIC TAPE AT EACH END OF EACH CONDUCTOR.

CONDUIT:

A. PROVIDE A COMPLETE ASSEMBLY OF CONDUIT, TUBING OR DUCT WITH FITTINGS, INCLUDING, BUT NOT LIMITED TO CONNECTORS, NIPPLES, COUPLINGS, LOCKNUTS, BUSHINGS, EXPANSION FITTINGS, OTHER COMPONENTS AND ACCESSORIES AS NEEDED.

B. FITTINGS SHALL BE DESIGNED AND APPROVED FOR THE SPECIFIC USE INTENDED. PROVIDE INSULATED THROATS OR BUSHINGS FOR ALL CONDUITS. GROUNDING BUSHINGS SHALL ALSO HAVE INSULATED THROATS.

C. MINIMUM CONDUIT SIZE IN ALL CASES SHALL BE 1/2" UNLESS MINIMUM SIZE IS SPECIFIED TO BE LARGER FOR SPECIFIC SYSTEMS SPECIFIED ELSEWHERE IN THE SPECIFICATIONS OR ON THE DRAWINGS.

D. RIGID STEEL CONDUIT SHALL BE HEAVY-WALL STEEL TUBE WITH METALLIC CORROSION-RESISTANT COATING ON INTERIOR AND EXTERIOR, HOT DIPPED GALVANIZED, FREE FROM DEFECTS, MANUFACTURED IN ACCORDANCE TO ANSI STANDARDS, AND UL-LISTED. USE THREADED COUPLINGS. USE RIGID GALVANIZED STEEL CONDUIT IN ALL LOCATIONS UNLESS NOTED OTHERWISE.

E. UNDERGROUND CONDUIT SHALL BE SCHEDULE 40 PVC (UNLESS NOTED OTHERWISE). ALL ABOVE GROUNDING CONDUITS TO BE RIGID CONDUIT.

F. AS A MINIMUM, CONDUIT SIZES SHALL BE IN ACCORDANCE WITH NEC CONDUIT FILL REQUIREMENTS, REGARDLESS OF SIZE SCHEDULE OR INDICATED. IF LARGER SIZE IS SCHEDULED OR INDICATED, THE LARGER SIZE SHALL BE USED.

G. INSTALLATION:

1. ANCHOR CONDUIT WITH HANGERS, CONDUIT STRAPS OR OTHER DEVICES SPECIFICALLY DESIGNED FOR THE PURPOSE. WIRE TIES SHALL NOT BE PERMITTED. USE OF TRAPEZE HANGERS FOR MULTIPLE PARALLEL CONDUIT RUNS.
2. ALL CONCRETE INSERTS SHALL BE GALVANIZED OR CADMIUM PLATED; INDIVIDUAL HANGERS, TRAPEZE HANGERS AND RODS SHALL BE PRIME COATED.
3. INSTALL HORIZONTAL RUNS OF CONDUIT TO PROVIDE A NATURAL DRAIN TO PREVENT MOISTURE COLLECTING IN THE POCKETS OR TRAPS.
4. CAP CONDUCTOR ENDS UNTIL THE CONDUCTOR IS INSTALLED TO PREVENT FOREIGN OBJECTS FROM ENTERING CONDUIT.
5. FITTINGS AND CONDUITS SHALL BE APPROVED FOR GROUNDING PURPOSES OR SHALL BE JUMPERED WITH A COPPER GROUNDING CONDUCTOR OF PROPER AMPACITY. LEAVE TERMINATION OF SUCH JUMPERS EXPOSED.
6. INSTALL (2) 200 POUND NYLON PULL CORDS IN ROUGH-IN RACEWAYS.
7. INSTALL OFFSETS, PULL BOXES AND ELBOWS AS REQUIRED TO ACCOMPLISH A HARMONIOUS ROUTING OF THE SYSTEMS.

JUNCTION AND PULL BOXES:

A. USE GALVANIZED PULL AND JUNCTION BOXES THAT COMPLY WITH NEC AS TO SIZE AND CONSTRUCTION.

B. FOR JUNCTION AND PULL BOXES, USE BOXES NOT LESS THAN 4" SQUARE AND 1 1/2" DEEP WITH REMOVABLE COVERS.

C. EXTERIOR, USE CAST ALUMINUM OR CAST IRON BOXES WITH THREADED HUBS AND GASKETED COVERS

D. INSTALL JUNCTION AND PULL BOXES IN ACCESSIBLE LOCATIONS. POSITION BOXES SO COVERS CAN BE REMOVED.

E. INSTALL BOXES ON CONCEALED CONDUITS WITH COVERS FLUSH WITH FINISH.

ALARM AND STATUS SENSORS

1. THE CONTRACTOR WILL PROVIDE SHELTER ALARM AND STATUS SENSORS, AT A MINIMUM, TO INCLUDE THE FOLLOWING SENSORS:

A. IONIZATION SENSOR(S) AS REQUIRED IN EACH CABINET FOR SMOKE DETECTION. THE NUMBER OF SENSORS WILL CONFORM TO THE REQUIRED APPLICABLE CODE.
B. A HYDROGEN SENSOR IF NEEDED DUE TO TYPE OF BATTERY SYSTEM.
C. A HUMIDITY MONITORING SENSOR
D. SHELTER/CABINET DOOR INTRUSION DETECTION SENSOR.
E. HIGH AND LOW TEMPERATURE MONITORING SENSORS.
F. AN INTERFACE TO THE CAMERA ACTIVATION ALARM (IF APPLICABLE).
G. SLEEPY CELL CONDITION (OPERATING CELL, BUT NO USER TRAFFIC AFTER AN AUTHORITY DEFINED PERIOD OF TIME)
H. HIGH VOLTAGE STANDING WAVE RATIO (VSWR)
I. ANY PSBN COMPONENT FAILURE
J. SMOKE AND/OR FIRE ALARMS
K. INDOOR TEMPERATURE AND ALARMS
L. OUTDOOR TEMPERATURE
M. CLIMATE CONTROL ALARMS
N. CABINET INTRUSION
O. EXTERIOR MOTION DETECTOR ALARMS
P. TOWER LIGHTING
Q. INTERCONNECT EQUIPMENT
R. HIGH/LOW BATTERY VOLTAGE FOR EACH BATTERY
S. UPS AUTOMATIC BYPASS OPERATION
T. RECTIFIER/INVERTER FAILURE
U. UPS COMMON TRIP ALARM (FORM C)
V. HIGH/LOW BATTERY TEMPERATURE FOR EACH BATTERY
W. LOW/HIGH -48 VDC
X. ALL RECTIFIER ALARMS
Y. LOW/HIGH TEMPERATURE OF THE -48 VDC SYSTEM
Z. GENERATOR FUEL LEVEL
AA. GENERATOR LOW FUEL ALARMS
AB. GENERATOR FUEL OVERFILL ALARMS
AC. GENERATOR BATTERY ALARMS
AD. GENERATOR ONLINE ALARMS
AE. GENERATOR HIGH TEMPERATURE ALARMS
AF. GENERATOR OVER CRANK ALARMS
AG. GENERATOR OVER SPEED ALARMS
AH. GENERATOR LOW OIL ALARMS
AI. GENERATOR TRANSFER SWITCH STATUS
AJ. AC SURGE SUPPRESSION ALARM INDICATION
AK. MASTER TIME SOURCE LOSS OF SYNC
AL. VOLTAGE STANDING WAVE RATION (VSWR) ON OUTPUT OF THE COMBINING SYSTEM
AM. LOW FORWARD POWER
AN. HIGH REFLECTED POWER
AO. INTERFERENCE MONITORING
AP. LOSS OF CONNECTIVITY ON ANY MICROWAVE OR BACKHAUL LINK
AQ. LOSS OF CONNECTIVITY TO THE INTERNET
AR. POWER AMPLIFIER FAILURE AND HIGH/LOW VOLTAGE
AS. ALARMS FROM SITE FREQUENCY AND TIME STANDARDS (E.G., GPS, ETC.).

2. THE CONTRACTOR WILL PROVIDE AND INSTALL SENSORS AND ALARMS THAT SHALL BE WIRED AND CONNECTED TO THE ALARM INTERFACE PANEL.

3. THE CONTRACTOR WILL PROVIDE SHELTERS TO INCLUDE APPROPRIATE HANDHELD FIRE EXTINGUISHER(S) PER CODE. THE FIRE EXTINGUISHER CERTIFICATION WILL BE CURRENT AS OF THE TIME OF THE ACCEPTANCE TESTING OF THE SITE.

4. THE CONTRACTOR WILL PROVIDE FIRE SUPPRESSION EQUIPMENT FOR ALL NEW CONTRACTOR PROVIDED LTE SYSTEM SHELTERS AND, SO LONG AS AN EXISTING SHELTER IS COMPLIANT WITH THE CURRENT APPLICABLE FIRE SUPPRESSION CODE, CONTRACTOR WILL PROVIDE ANY MODIFICATIONS TO EXISTING LTE SYSTEM SHELTERS REQUIRED DUE TO THE ADDITION OF THE CONTRACTOR SUPPLIED EQUIPMENT OR ADDITIONAL SQUARE FOOTAGE ADDED TO THE EXISTING SHELTER FOR THE PURPOSE OF CONTRACTOR SUPPLIED EQUIPMENT.

5. AT EXISTING FACILITIES, CONTRACTOR TO COORDINATE WITH FACILITY MAINTENANCE COMPETENT PARTY TO COLLECT ALL EXISTING ALARM PANEL INFORMATION REQUIRED FOR INTEGRATION.

NOTE: ALL INFORMATION IS SUBJECT TO FIELD VERIFICATION. ALL INFORMATION IS CONFIDENTIAL AND NOT FOR PUBLIC DISTRIBUTION WITHOUT EXPRESS CONSENT OF THE LOS ANGELES REGIONAL INTEROPERABLE COMMUNICATIONS SYSTEMS AUTHORITY.

ELECTRICAL GENERAL NOTES
E1

LA-RICS
Los Angeles Regional Interoperable Communications System

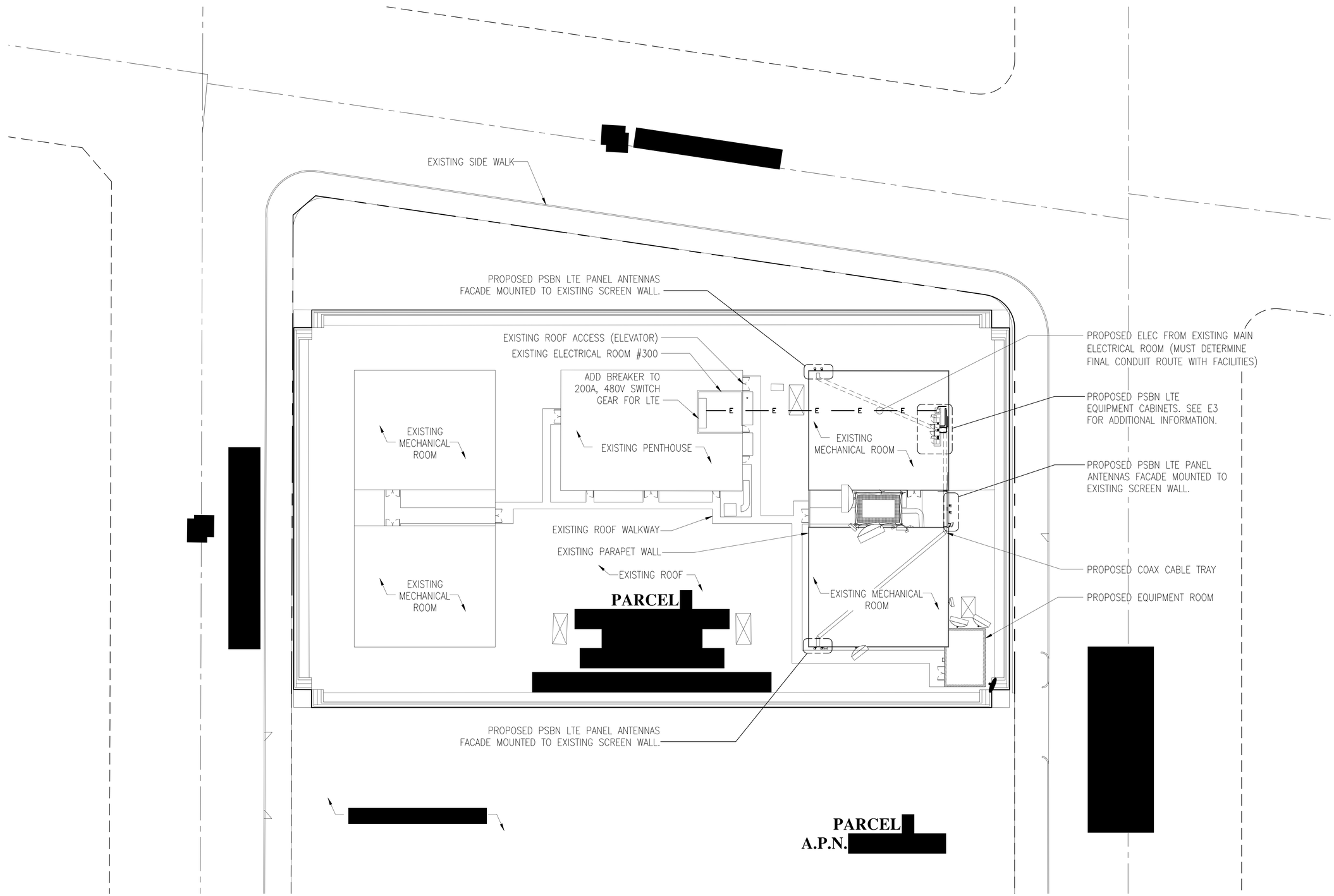

01 **ROOF PLAN & NOTES**
SCALE: 1"=10'

20 0 10 20
SCALE: 1"= 20'

NOTE: ALL INFORMATION IS SUBJECT TO FIELD VERIFICATION. ALL INFORMATION IS CONFIDENTIAL AND NOT FOR PUBLIC DISTRIBUTION WITHOUT EXPRESS CONSENT OF THE LOS ANGELES REGIONAL INTEROPERABLE COMMUNICATIONS SYSTEMS AUTHORITY.

UTILITY
ROUTING PLAN
E2

LA-RICS
Los Angeles Regional Interoperable Communications System

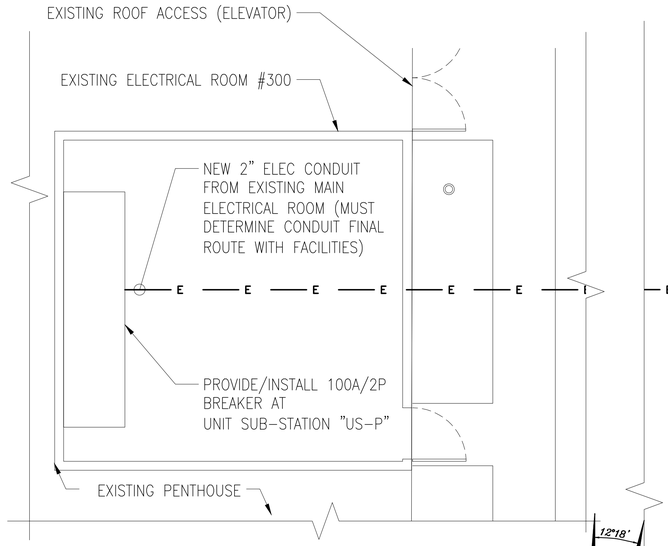

03 **ELEC. ROOM LOCATION**
1/2" = 1'-0"

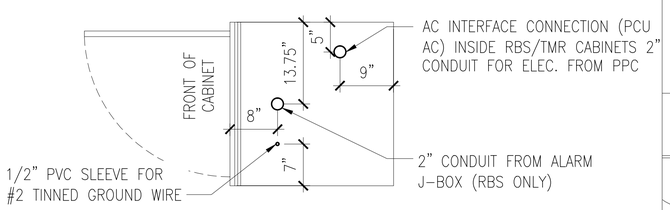

02 **RBS / TMR CONDUIT STUB-UP LOCATION**
1/4" = 1'-0"

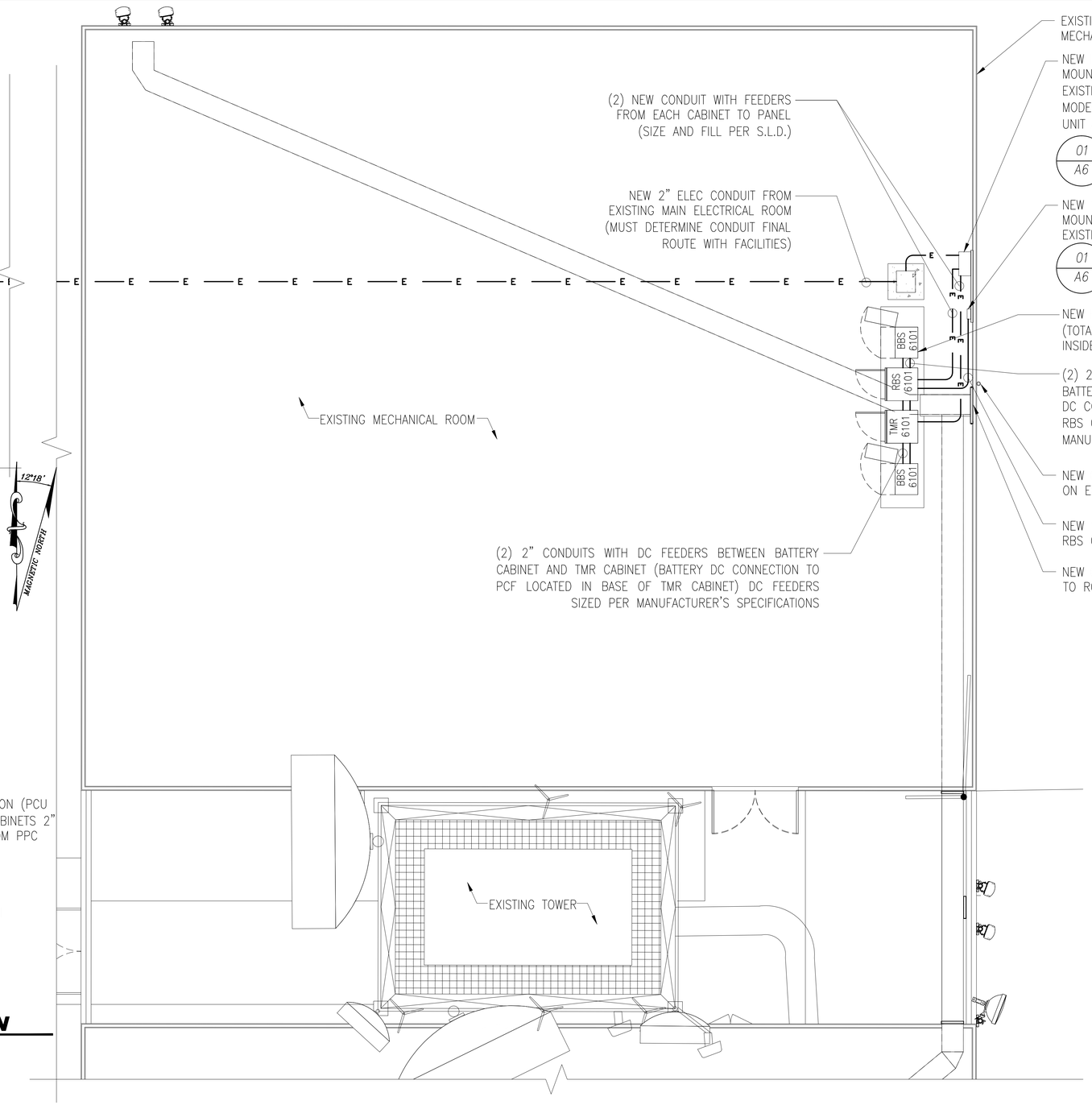

12°18'
MAGNETIC NORTH

01 **ENLARGED ROOF/UTILITY ROUTING PLAN**
SCALE: 1/4"=1'-0"

4' 0 2' 4'
SCALE: 1/4"= 1'-0"

GENERAL NOTES:

1. CONSTRUCTION STAGING AREA TO BE DETERMINED AT PRE CONSTRUCTION WALK WITH LANDLORD & AUTHORITY
2. VERIFY POWER/UTILITY DESIGN PRIOR TO CONSTRUCTION
3. EXISTING DRAINAGE AND PATTERN TO REMAIN THE SAME

ENLARGED UTILITY ROUTING PLAN
E3

NOTE: ALL INFORMATION IS SUBJECT TO FIELD VERIFICATION. ALL INFORMATION IS CONFIDENTIAL AND NOT FOR PUBLIC DISTRIBUTION WITHOUT EXPRESS CONSENT OF THE LOS ANGELES REGIONAL INTEROPERABLE COMMUNICATIONS SYSTEMS AUTHORITY.

LA-RICS
Los Angeles Regional Interoperable Communications System

01 NOT USED
SCALE: NTS

NOTE: ALL INFORMATION IS SUBJECT TO FIELD VERIFICATION. ALL INFORMATION IS CONFIDENTIAL AND NOT FOR PUBLIC DISTRIBUTION WITHOUT EXPRESS CONSENT OF THE LOS ANGELES REGIONAL INTEROPERABLE COMMUNICATIONS SYSTEMS AUTHORITY.

SITE ID: [redacted] SITE NAME: [redacted] ADDRESS: [redacted]

200A, 120/240, 1PHASE, 3WIRE WITH 200A/2P MAIN BREAKER

DESCRIPTION	A/P	NO.	LOAD A	LOAD B	NO.	A/P	DESCRIPTION
TVSS 20A	20/1	1	100 / 360		2	20/1	GFCI 20A
RBS CABINET	80/2	3		4080 / 3750	4	60/2	TMR CABINET
		5	4080 / 3750		6		
SPARE	20/1	7		– / –	8	20/1	TOWER LIGHTING
NOT USED		9	– / –		10	20/1	GFCI @ TOWER LIGHT
NOT USED		11		– / –	12		NOT USED
NOT USED		13	– / –		14		NOT USED
NOT USED		15		– / –	16		NOT USED
NOT USED		17	– / –		18		NOT USED
NOT USED		19		– / –	20		NOT USED
NOT USED		21	– / –		22		NOT USED
NOT USED		23		– / –	24		NOT USED
			8,290	7,830			

02 PANEL SCHEDULE
SCALE: NTS

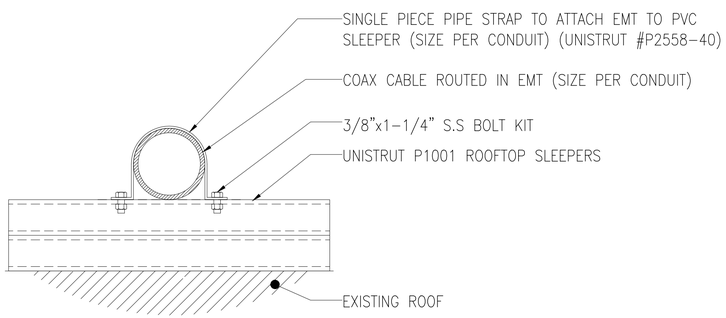

NOTE:
1. INSTALL ONLY METAL COUPLINGS BETWEEN SECTIONS OF EMT
2. INSTALL BOOT ASSEMBLY AT EACH END OF EMT CONDUIT. (VALMONT #BA782)
3. INSTALL SLEEPERS AND PIPE STRAPS EVERY 4 FT.

03 CONDUIT ON SLEEPER
SCALE: NTS

04 NOT USED
SCALE: NTS

ELECTRICAL DETAILS
E4

LA-RICS
Los Angeles Regional Interoperable Communications System

Ordering Information – CAC Model

A small selection of products is listed below.
Please refer to the CAC Model Ordering Matrix for additional configurations.

Emerson Catalog Number	Emerson Part Number	Description
CACA22204090		100A slide bar transfer device, 24-position load center, ADR10448RS, MOV
CACA45201090		200A slide bar transfer device, 24-position load center, AR20044RS, MOV
CACA45201190		200A slide bar transfer device, 24-position load center, AR20044RS with-45 degree angle adapter, MOV
CACA75201090		200A slide bar transfer device, 30-position load center, AR20044RS, MOV

Ordering Matrix – CAC Model

AC Power Configuration	2 = 100A main, 24 pos. LC 4 = 200A main, 24 pos. LC 7 = 200A main, 30 pos. LC
AIC Rating	2 = 10K AIC 5 = 65K AIC Series Rated
Main Breakers (Transfer Device)	1 = Single disconnect 2 = Slide bar mechanical interlock
Generator Inlet	00 = None 01 = AR20044RS (Appleton 200A) 02 = AR20034RS (Appleton 200A) 03 = AR20033RS (Appleton 200A) 04 = AR1044RS (Appleton 100A) 05 = HBL2715SW (Hubbell 30A) 08 = M4100B12W (McGill 100A) 09 = HBL4100RS2WR (Hubbell 100A) 10 = HBL4100RS1WR (Hubbell 100A) 11 = HBL4200RS1WR (Hubbell 200A) 12 = 4100B12W (Hubbell 100A) 13 = ADR1033RS (Appleton 100A) 14 - Custom Option
Generator Inlet Accessories	0 = No angle adapter 1 = 45 degree angle adapter
TVSS Options	0 = None 9 = IG1205200RK-WW
Cabinet Mounting	0 = None

02 PANEL CUT SHEET

SCALE: NTS

NEW LTE PPC POWER REQUIREMENTS CALCULATION

FULL LOAD EQUIPMENT REQUIREMENT BY MANUFACTURER: 150 AMPS

STEP DOWN TRANSFORMER PRIMARY FULL LOAD: 75 AMPS

BREAKER REQUIRED AT SUBSTATION: 100 AMPS

1. (N) 50KVA DRY TYPE STEP DOWN XFORMER LOCATED BELOW H-FRAME 480V, 1PH, 2WIRE TO 120/240V, 1PH, 3WIRE, WITH WEATHER SHIELD, GROUND PER NEC ART. 250
2. (N) GFCI C1", (2)#12, AND (1)#12GND THHN CU
3. (N) WEATHERPROOF LOAD CENTER WITH MANUAL XFER SW, SURGE SUPPRESSION,120/240V, 1PH, 3W EMERSON MFR#CACA45201190
4. (N) TMR C1", (3)#6, AND (1)#8 GND CU
5. (N) C2", (3)#3/0, AND (1)#4GND THHN CU
6. (N) C2", (2)#2, AND (1)#4 GND THHN CU FOR UP TO 480'
7. NOT USED
8. (N) TMR C1", (3)#6, AND (1)#8 GND CU
9. (N) 12"X12"X6" ALARM BOX

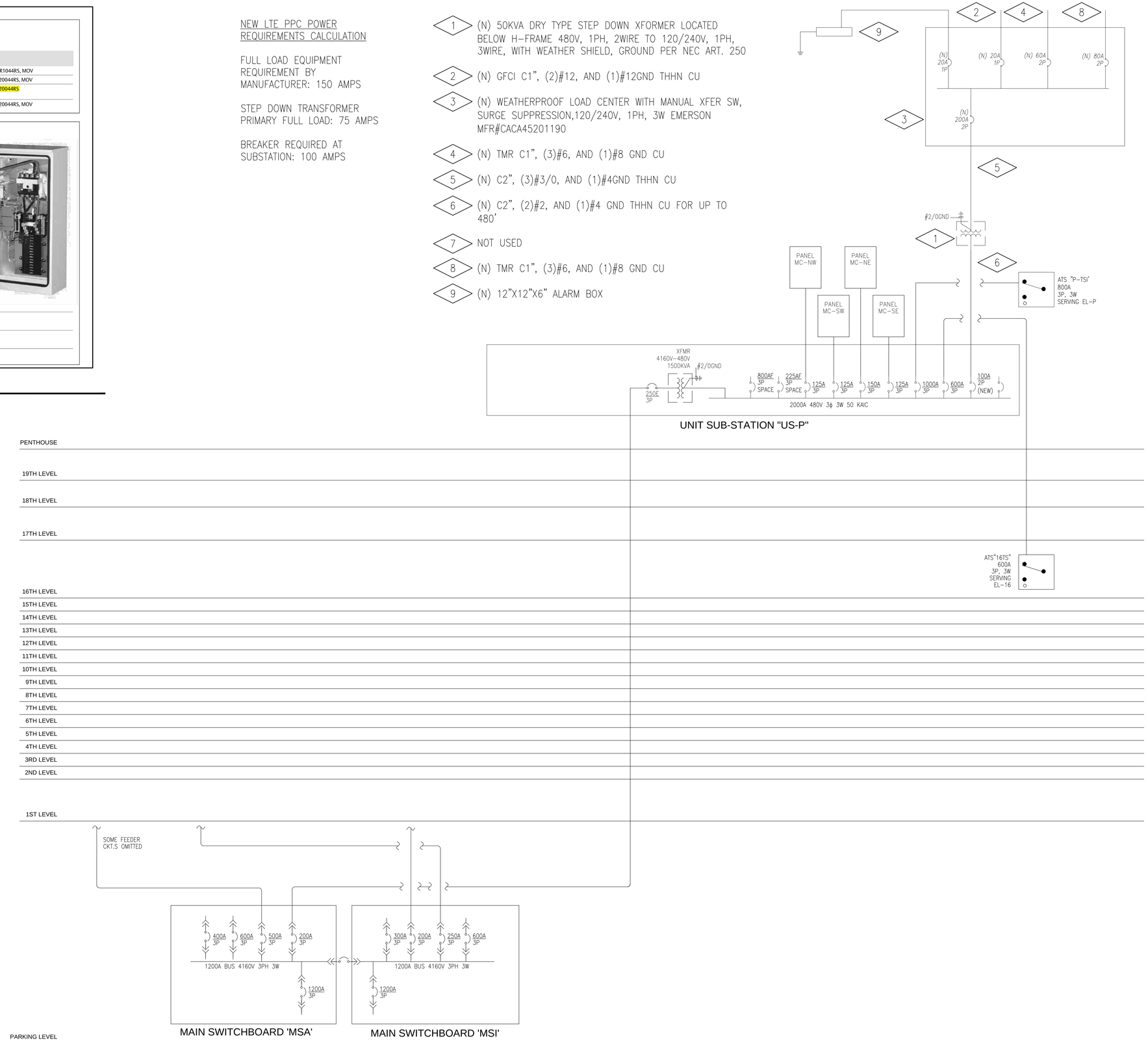

01 SINGLE LINE DIAGRAM

SCALE: NTS

SINGLE LINE DIAGRAM
E4.1

LA-RICS
Los Angeles Regional Interoperable Communications System

GROUNDING

GENERAL

A. GROUNDING SHALL BE INSTALLED PER [redacted] STANDARDS AND GUIDELINES FOR COMMUNICATIONS SITES.

B. ALL GROUNDING TO BE INSPECTED BY [redacted]/AUTHORITY PRIOR TO BACKFILL.

CONNECTIONS

A. ALL EXTERNAL GROUNDING CONNECTIONS SHALL BE MADE BY THE EXOTHERMIC PROCESS, BY IRREVERSIBLE HIGH COMPRESSION, AND/OR BY 2-HOLE LONG BARREL LUGS. NO SINGLE=HOLE, CRIMP-ON, OR SOLDER CONNECTIONS SHALL BE USED. CONNECTIONS SHALL INCLUDE ALL CABLE TO CABLE SPLICE, ALL MATERIALS USED (MOLDS, WELDING METAL, TOOLS, ETC.) SHALL BE INSTALLED PER MANUFACTURER'S RECOMMENDATIONS AND PROCEDURES.

B. ALL INTERIOR GROUNDING AND BONDING CONDUCTORS SHALL BE CONNECTED BY TWO HOLE – TYPE (COMPRESSION) CONNECTIONS. MECHANICAL CONNECTIONS, FITTINGS OR CONNECTIONS THAT DEPEND SOLELY ON SOLDER SHALL NOT BE USED.

GROUND BARS

A. ALL GROUND BARS SHALL BE 1/4" THICK BARE TINNED PLATED AND OF SUFFICIENT SIZE TO GROUND ATTACHMENTS INDICATED IN THE DRAWINGS (MIN. 2 X 12"). HOLES SHALL BE 7/16" DIAMETER ON 3/4" CENTERS TO PERMIT THE CONVENIENT USE OF TWO-HOLE LUGS.

B. THE METHOD OF ATTACHMENT OF THE GROUNDING ELECTRODE CONDUCTOR TO EXTERIOR AND TOWER GROUND BARS SHALL BE EXOTHERMIC OR IRREVERSIBLE HIGH COMPRESSION.

CABLES

A. ALL GROUNDING CABLES SHALL BE STANDARD #2 AWG TINNED SOLID BARE COPPER WIRE UNLESS INDICATED OTHERWISE ON DRAWINGS.

B. WHEN THE DIRECTION OF THE CONDUCTOR MUST CHANGE, IT SHALL BE DONE GRADUALLY. ALL BENDS SHALL BE MADE WITH THE GREATEST PRACTICAL RADIUS AND SHALL NOT BE LESS THAN 8".

C. ALL CONDUITS SHALL BE METALLICALLY SUPPORTED.

D. ALL CONDUITS USED AS RACEWAYS FOR GROUNDING CONDUCTORS SHALL BE SEALED AT BOTH ENDS IN ACCORDANCE WITH THE NATIONAL ELECTRICAL CODE (NEC).

E. PROVIDE WIRE PROTECTION PIPES AT ALL GROUND WIRES AT GRADE LEVEL PER DETAIL.

GROUND RING

A. THE GROUND RING ENCIRCLING THE BUILDING SHALL BE A MINIMUM SIZE OF 2 AWG BARE TINNED SOLID COPPER CONDUCTOR IN DIRECT CONTACT WITH THE EARTH AT A MINIMUM DEPTH OF 30 INCHES OR 6 INCHES BELOW FROST LINE. CONDUCTOR BENDS SHALL HAVE A MINIMUM RADIUS OF 8 INCHES.

B. ALL EXTERNAL GROUND RINGS ARE TO BE JOINED TOGETHER AND ALL CONNECTIONS SHALL BE EXOTHERMIC OR IRREVERSIBLE HIGH COMPRESSION. NO LUGS OR CLAMPS WILL BE ACCEPTED.

FENCE/GATE

A. GROUND ALL SECTIONS OF FENCE AND GATE AS INDICATED ON DRAWINGS. GROUND EACH GATE POST AND CORNER POST. ALL CONNECTIONS FOR THE FENCE GROUND SYSTEM SHALL BE EXOTHERMIC WELD AND INSTALLED PER MANUFACTURER'S RECOMMENDATIONS AND PROCEDURES.

DISSIMILAR METALS

A. BONDING OF TWO DISSIMILAR METALS MAY RESULT IN GALVANIC CORROSION. A REACTION THAT OCCURS AT THE JUNCTION OF THE DISSIMILAR METALS WHEN THEY ARE EXPOSED TO MOISTURE. THE DEGREE AND RATE OF CORROSION DEPENDS ON THE RELATIVE POSITION OF THE METALS IN THE ELECTROCHEMICAL SERIES. TO DETERMINE THE LIKELIHOOD OF TWO METALS REACTING REFERENCE SECTION 6.5.2 IN THE R56 SPECIFICATIONS.

1. THE SAME METAL SHALL BE USED THROUGHOUT THE SYSTEM WHEN POSSIBLE.
2. EXOTHERMICALLY WELD CONNECTIONS OF DIFFERENT METALS WHEN WELD MATERIAL IS AVAILABLE FOR THE METALS BEING BONDED.
3. COPPER CONDUCTORS SHALL NOT BE INSTALLED ON ALUMINUM ROOFING OR SIDING.
4. ALUMINUM AND COPPER SHALL NOT BE DIRECTLY CONNECTED TO EACH OTHER UNLESS USING EXOTHERMIC WELDING MATERIALS SPECIFICALLY INTENDED FOR THESE TWO METALS TO MAKE THE CONNECTION. ALUMINUM AND COPPER MAY BE JOINED WITH THE USE OF A LISTED BIMETALLIC TRANSITION CONNECTOR OF STAINLESS STEEL. THESE CONNECTORS SHALL BE LISTED FOR THE SIZE AND NUMBER OF CONDUCTORS AND MARKED WITH AL/CU. THESE CONNECTIONS SHALL BE LIBERALLY COATED WITH A CONDUCTIVE ANTIOXIDANT AT THE POINT OF INSERTION INTO THE CONNECTOR.
5. COPPER SHALL NOT COME IN CONTACT WITH GALVANIZED STEEL.
6. TINNED COPPER SHALL BE USED WHEN CONNECTING TO A GALVANIZED STEEL STRUCTURE.

ANTI-OXIDANT

A. ANTI-OXIDANT COMPOUND SHALL BE USED BETWEEN ALL EXTERNAL MECHANICAL CONNECTIONS. CARE SHALL BE TAKEN TO USE THE APPROPRIATE ANTI-OXIDANT TYPE. IN GENERAL, ZINC ANTI-OXIDANT (GRAY COLOR) SHALL BE USED WHEN CONNECTING TO GALVANIZED AND ALUMINUM OBJECTS AND COPPER ANTI-OXIDANT (COPPER COLOR) SHALL BE USED WHEN CONNECTING TO COPPER OBJECTS.

TEST PROCEDURE

A. THE GROUND SYSTEM RESISTANCE SHALL NOT EXCEED 5 OHMS. TESTING SHALL BE PERFORMED IN ACCORDANCE WITH MOTOROLA R56 SPECIFICATIONS (DATED SEPTEMBER 1, 2005).

1. CLAMP-ON RESISTANCE OR INDUCED FREQUENCY TESTS WITH CLAMP-ON GROUND RESISTANCE TESTER.
2. GROUNDING RESISTANCE FOR THE GROUNDING SYSTEM WILL BE 5 OHMS OR AS REQUIRED BY THE TELECOMMUNICATIONS EQUIPMENT MANUFACTURER(S), WHICHEVER IS LEAST.

B. GROUND TEST MUST BE PERFORMED PRIOR TO UTILITY CONNECTION AND GROUND CONNECTION TO EXISTING SITE COMMON GROUNDING ELECTRODE SYSTEM.

GROUNDING SYSTEMS

A. EXAMINATION: VERIFY THAT SURFACES ARE READY TO RECEIVE WORK AND THAT THE FIELD MEASUREMENTS ARE AS SHOWN ON SHOP DRAWINGS & R56 COMPLIANT.

B. INSTALLATION – INSTALL AS INDICATED ON THE DRAWINGS AND AS REQUIRED PER R56 REQUIREMENTS:

1. GROUNDING NETWORK SYSTEM SHALL INCLUDE ELECTRICAL TRENCHING, BACK FILL AND COMPACTION PER THIS SECTION; GROUNDING WIRE, GROUNDING ELECTRODES AND ALL NECESSARY MATERIALS AND LABOR REQUIRED TO COMPLETE THE SPECIFIED SYSTEM. PER R56 SPECS.

2. ALL GROUND CONNECTIONS SHALL CONFORM TO I.E.E.E. STD 837 AND/ OR UL467 PROTECTED FROM CORROSION AS NOTED ON DRAWINGS. USE EXOTHERMIC OR DOUBLE LUG FOR OUTDOORS ABOVE AND BELOW GRADE, INDOORS, AND ON ROOF INSTALLATIONS, AS INDICATED ON PLANS.

3. ALL CLAMP CONNECTIONS SHALL BE MADE ACCESSIBLE FOR INSPECTION. USE ONLY WHERE SPECIFIED.

4. ALL UNDERGROUND CONNECTIONS SHALL BE INSPECTED BY [redacted] REPRESENTATIVES PRIOR TO BACK FILLING IF POSSIBLE WITHOUT DELAYING THE PROJECT SCHEDULE.

5. IF ROCK IS ENCOUNTERED, GROUND ROD SHALL BE INSTALLED IN A 2 INCH DIAMETER DRILLED HOLE TO THE REQUIRED DEPTH AND BACK FILLED WITH APPLICATIONS OF MAGNESIUM SULFATE OR COPPER SULFATE (IF XIT GROUNDING IS NOT USED).

6. GROUNDING WIRE SHALL NOT BEND LESS THAN 90° IN ANY LOCATION WITH A MINIMUM BEND RADIUS OF 8".

7. PROVIDE CORROSION PROOFING PAINT ON SURFACES EXPOSED DURING INSTALLATION.

8. ALL ABOVE GROUND CONNECTIONS SHALL BE BOLTED, CLAMP OR BURNDY CONNECTIONS UNLESS OTHERWISE NOTED. ALL BELOW GROUND CONNECTIONS SHALL BE EXOTHERMIC WELDED. PROVIDE CORROSION PROTECTION.

9. ALL GROUND CONNECTIONS TO THE GROUND BAR SHALL BE MADE WITH DOUBLE HOLE HYDRAULICALLY INDENTED LUGS, EXCEPT FOR TWO EXOTHERMIC WELDS, AS SHOWN ON PLANS.

10. WHERE GROUND CONNECTIONS ARE MADE, THE CONTACT POINTS ARE TO BE CLEANED AND MADE FREE OF FOREIGN MATERIALS, SUCH AS PAINT AND CORROSION, TO ENSURE AN ADEQUATE BOND.

11. [redacted] R-56 STANDARDS SHALL BE USED AS A GUIDELINE FOR GROUNDING, BONDING, INSTALLATION, AND CONNECTIONS.

12. ALL MECHANICAL GROUNDING CONNECTIONS MADE THROUGHOUT THESE DRAWINGS SHALL BE MADE WITH COPPER-SHIELD. THERE IS NO EQUIVALENT FOR THESE ANTI-OXIDATION COMPOUNDS. NO OTHER COMPOUND WILL BE ACCEPTED. COATED ALL WIRES BEFORE LUGGING. COAT ALL SURFACES BEFORE CONNECTING.

C. FIELD QUALITY CONTROL – FIELD INSPECTION AND TESTING WILL BE PERFORMED AS REQUIRED.

1. THE CONTRACTOR SHALL VERIFY THAT THE SYSTEM IS EFFECTIVELY GROUNDED, MEETS NEC ARTICLE 250 REQUIREMENTS, AND IS ACCEPTABLE TO THE LOCAL UTILITY AND LOCAL AUTHORITY HAVING JURISDICTION.

2. THE CONTRACTOR SHALL MAKE ALL MEASUREMENTS REQUIRED TO TEST THE GROUNDING NETWORK SYSTEM. SYSTEM SHALL BE TESTED AT THE TIME OF INSTALLATION.

3. THE GROUNDING NETWORK SYSTEM TEST PROCEDURE SHALL COMPLY WITH CLAMP-ON RESISTANCE OR INDUCED FREQUENCY TESTS WITH CLAMP-ON GROUND RESISTANCE TESTER, EXCEPT AS MODIFIED HEREIN.

4. CONTRACTOR SHALL VERIFY THE ADEQUACY OF THE INSTALLED SYSTEM. CONTRACTOR SHALL CONDUCT "SITE RESISTANCE TO EARTH GROUNDING TESTING" PER R-56 STANDARD. INSTALLED SYSTEM SHALL ACHIEVE A GROUND RESISTANCE OF LESS THAN 5 OHMS.

5. RECORD GROUND RESISTANCE TEST RESULTS ON [redacted] "GROUND RESISTANCE TEST" FORM. DELIVERABLE TO [redacted]

6. TEST SHALL BE WITNESSED BY [redacted] REPRESENTATIVES. IF POSSIBLE WITHOUT DELAYING THE PROJECT SCHEDULE.

7. COPIES OF THE TEST RESULTS SHALL BE SUBMITTED TO [redacted] REPRESENTATIVES AND ENGINEER.

8. WHEN USING OR CONNECTING TO AN EXISTING GROUND RING – TEST GROUND RING PRIOR TO AND AFTER CONNECTION TO THE EXISTING GROUND RING.

GROUNDING
GENERAL NOTES
G1

NOTE: ALL INFORMATION IS SUBJECT TO FIELD VERIFICATION. ALL INFORMATION IS CONFIDENTIAL AND NOT FOR PUBLIC DISTRIBUTION WITHOUT EXPRESS CONSENT OF THE LOS ANGELES REGIONAL INTEROPERABLE COMMUNICATIONS SYSTEMS AUTHORITY.

Underground Service Alert

Call: TOLL FREE
1-800
422-4133
TWO WORKING DAYS BEFORE YOU DIG

NOTIFY DIG-ALERT OR PRIVATE LOCATING COMPANY PRIOR TO ANY EXCAVATING OR TRENCHING

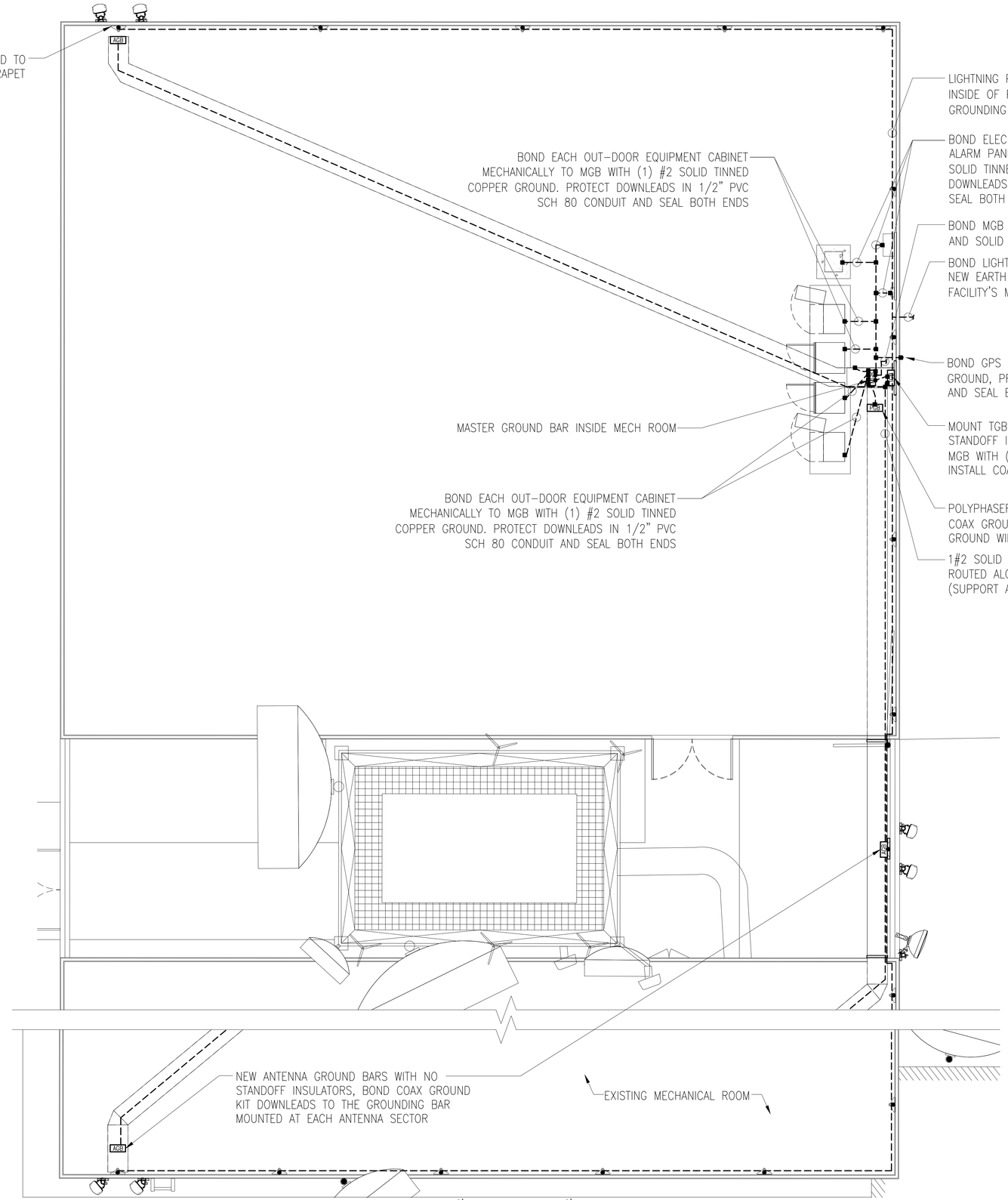

01 **EXTERIOR GROUNDING PLAN**
SCALE: 1/2"=1'-0"

2' 0 2'
SCALE: 1/2"= 1'-0"

LEGEND

- EXOTHERMIC WELD
- MECHANICAL CONNECTION
- XIT
- INSPECTION WELL
- 5/8" x 10'-0" GROUND ROD
- #2 TINNED SOLID BARE COPPER GROUND WIRE
- #2/0 STRANDED TINNED GROUND WIRE

12°23'
MAGNETIC NORTH

LA-RICS
Los Angeles Regional Interoperable Communications System

EXTERIOR
GROUNDING PLAN
G2

NOTE: ALL INFORMATION IS SUBJECT TO FIELD VERIFICATION. ALL INFORMATION IS CONFIDENTIAL AND NOT FOR PUBLIC DISTRIBUTION WITHOUT EXPRESS CONSENT OF THE LOS ANGELES REGIONAL INTEROPERABLE COMMUNICATIONS SYSTEMS AUTHORITY.

NOTE: ALL INFORMATION IS SUBJECT TO FIELD VERIFICATION. ALL INFORMATION IS CONFIDENTIAL AND NOT FOR PUBLIC DISTRIBUTION WITHOUT EXPRESS CONSENT OF THE LOS ANGELES REGIONAL INTEROPERABLE COMMUNICATIONS SYSTEMS AUTHORITY.

LA-RICS
Los Angeles Regional Interoperable Communications System

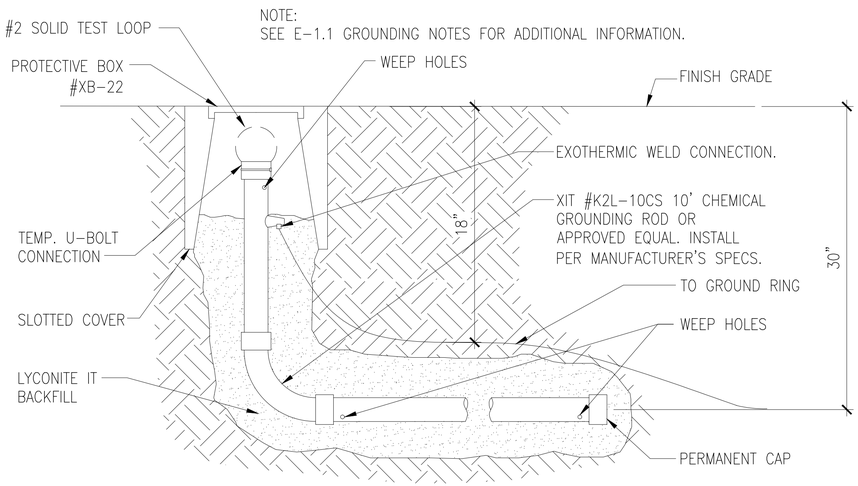

03 XIT DETAIL
SCALE: NTS

02 NOT USED
SCALE: NTS

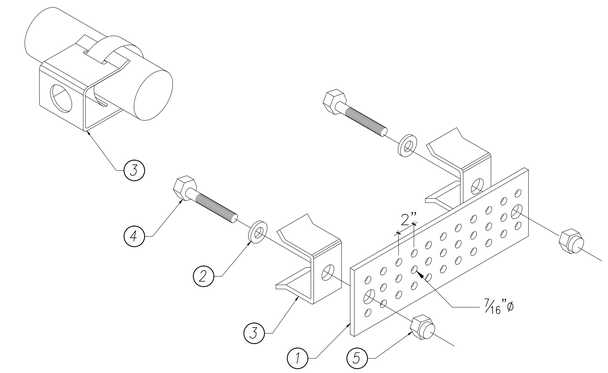

1. TINNED COPPER GROUND BAR PLATE, 1/4"x4"x12". HOLE CENTERS TO MATCH NEMA DOUBLE LUG CONFIGURATION. APPLY ANTI-OXIDATION COMPOUND.
2. 5/8" LOCK WASHERS
3. STANDOFF ADAPTER
4. CONNECTION BOLT
5. LOCK NUT (OR NUT WITH FLAT & LOCK WASHERS)

01 GROUND BAR W/O INSULATORS
SCALE: NTS

05 NOT USED
SCALE: NTS

NOTES:
1. CONTRACTOR TO APPLY ANTI-OXIDATION COMPOUND.
2. GROUND BAR SHALL BE SIZED TO ACCOMMODATE ALL GROUNDING CONNECTION REQUIRED.
3. CLEAN ATTACHMENT POINTS TO REMOVE PAINT.
4. ALL GROUND BARS TO BE TINNED

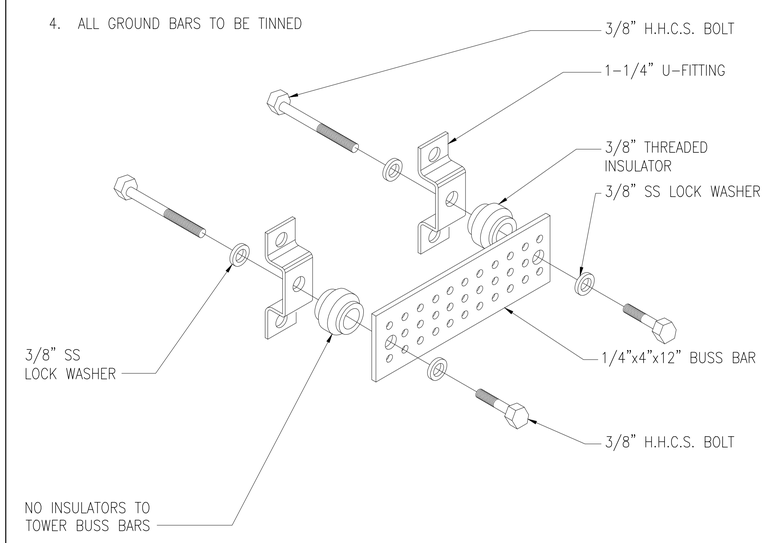

04 GROUND BAR WITH INSULATORS
SCALE: NTS

GROUNDING DETAILS
G3

NOTE: ALL INFORMATION IS SUBJECT TO FIELD VERIFICATION. ALL INFORMATION IS CONFIDENTIAL AND NOT FOR PUBLIC DISTRIBUTION WITHOUT EXPRESS CONSENT OF THE LOS ANGELES REGIONAL INTEROPERABLE COMMUNICATIONS SYSTEMS AUTHORITY.

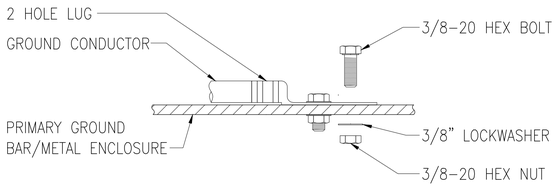

INSTALLATION NOTES:

1. SELECT BOLT LENGTH TO PROVIDE A MINIMUM OF TWO EXPOSED THREADS
2. BURNISH MOUNTING SURFACE TO REMOVE PAINT IN THE AREA OF LUG CONTACT
3. APPLY ANTI-OXIDANT OMFOUND TO MATING SURFACE OF LUG AND WIRE CLEAN EXCESS COMPOUND
4. USE SOLID COPPER WIRE AND MECHANICAL 2-HOLE LUG WITH STAINLESS STEEL HARDWARE FOR ALL EXTERIOR GROUNDING

Universal Two-Hole Lugs with Sight Holes — A valmont COMPANY

Features: Longer barrel lengths than many other brands. Chamfered ends allow easy wire insertion. Color coded.

Construction: Tin plated copper.

Design Criteria: Universal hole design allows 0.75" - 1" spacing. UL listed with inspection windows.

Part #	Gauge	Stud Size	Hole Spacing	Color	Barrel Length	Weight
HLU6	6	3/8"	0.75" - 1"	Blue	Long	0.05 lb.
HLU2S	2 Solid	3/8"	0.75" - 1"	White	Long	0.05 lb.
HLU2	2	3/8"	0.75" - 1"	Brown	Long	0.05 lb.

04 GND CONN. DETAIL
SCALE: NTS

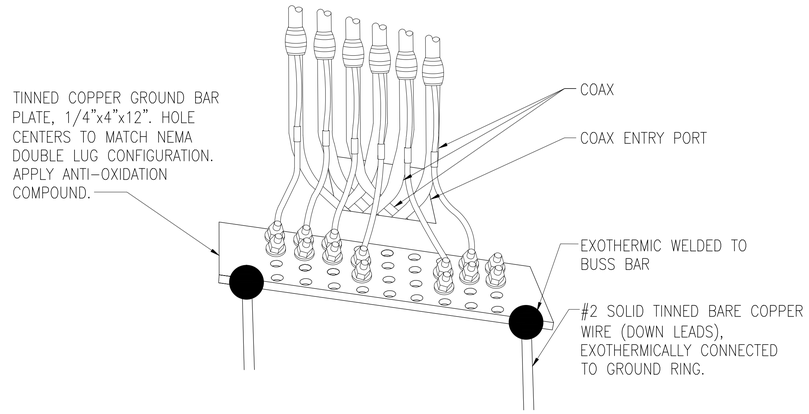

NOTE:
1. GROUND BAR TO BE INSTALLED WITHIN 30" ABOVE THE TOP OF THE ICE BRIDGE.
2. ANTENNA GROUND BAR W/ INSULATORS MECHANICALLY CLAMPED TO TOWER STEEL WITH STAINLESS STEEL HARDWARE. CHEMICALLY REMOVE PAINT AND APPLY ANTI-OXIDATION COMPOUND PRIOR TO CLAMPING TO TOWER.
3. TORQUE HARDWARE TO 12 FT.-LBS.

03 LOWER MONOPOLE/TOWER (TGB) COAX GROUND BAR DETAIL
SCALE: NTS

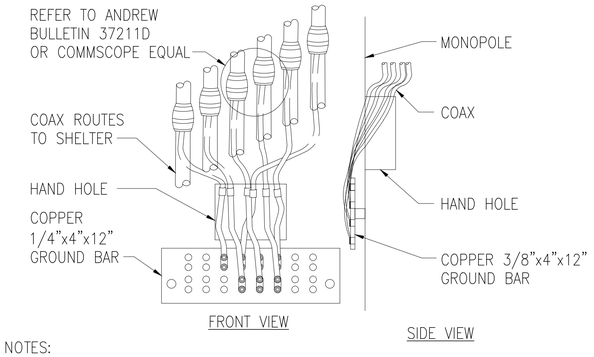

NOTES:
1. GROUND BARS REQUIRED EVERY 100 FT. MAXIMUM.
2. ANTENNA GROUND BAR SHALL BE MECHANICALLY CLAMPED DIRECTLY TO THE MONOPOLE STEEL WITH STAINLESS STEEL HARDWARE. CHEMICALLY REMOVE PAINT AND APPLY ANTI-OXIDATION COMPOUND OR APPROVED EQUAL PRIOR CLAMPING TO INSIDE OF MONOPOLE TOWER.
3. TORQUE HARDWARE TO 12 FT-LBS

01 TYP. COAX GROUND BAR DETAIL
SCALE: NTS

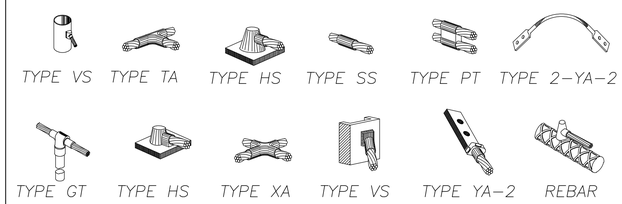

02 EXOTHERMIC WELD
SCALE: NTS

FIRST LAYER: 3M 33+ BLACK TAPE #054007-06132 (OR APPROVED EQUAL). THIS LAYER OF TAPE IS WRAPPED STARTING FROM THE MIDDLE OF THE CONNECTORS OUTWARD TO ONE END GOING 1.5"-2.0" BEYOND THE CONNECTOR, THEN BACK TO THE OPPOSITE END AGAIN GOING 1.5" - 2.0" BEYOND THE CONNECTOR, AND THEN BACK TO THE MIDDLE IN ONE CONTINUOUS WRAP, OVERLAPPING EACH WRAP BY 1/4". BEFORE CUTTING THE TAPE, OVERLAP SEVERAL WRAPS AT THE MIDDLE OF THE CONNECTOR. THIS TAPE SHOULD BE WRAPPED IN THE OPPOSITE DIRECTION OF HOW THE CONNECTOR IS TIGHTENED.

SECOND LAYER: DECIBEL PRODUCTS VAPOR WRAP #DB11316 (OR APPROVED EQUAL). THIS LAYER OF BUTYL TAPE IS WRAPPED AROUND THE FIRST LAYER OF BLACK TAPE. REPEAT THE TAPING PROCESS FOR THE FIRST LAYER USING VAPOR WRAP AND OVERLAP EACH END OF THE PREVIOUS LAYER OF BLACK TAPE BY 1." USE AT MINIMUM OF 2" OF VAPOR WRAP TO COVER METAL GROUND LEAD NEAR CLAMP LOCATIONS.

THIRD LAYER: 3M 33+ BLACK TAPE #054007-06132 (OR APPROVED EQUAL). THIS LAYER OF TAPE IS WRAPPED AROUND THE SECOND LAYER OF VAPOR WRAP. REPEAT THE TAPING PROCESS FOR THE FIRST LAYER USING BLACK TAPE AND OVERLAP EACH END OF THE PREVIOUS LAYER OF VAPOR WRAP BY 1."

05 COAX CABLE GROUNDING WEATHERPROOFING
SCALE: NTS

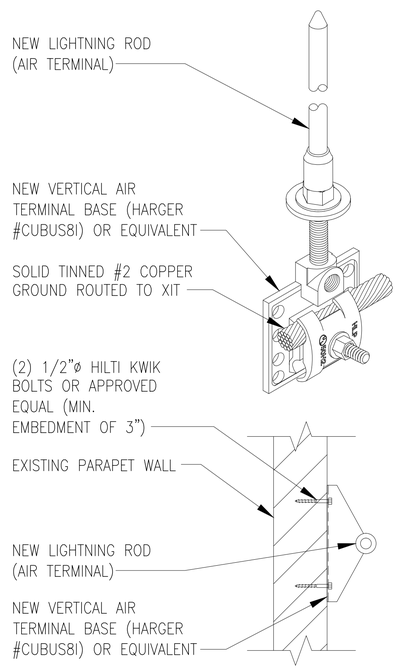

06 LIGHTNING ROD MOUNTING DETAIL
SCALE: NTS

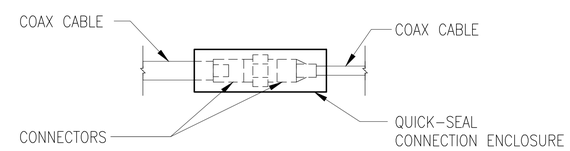

VALMONT WEATHERPROOFING QUICK-SEAL CONNECTION ENCLOSURES	
PART #	APPLICATION
D32473	7/8" TO 1/2" CONNECTION
C79091	1-1/4" TO 1/2" CONNECTION
E97072	1-5/8" TO 1/2" CONNECTION
D80635	1/2" TO ANTENNA (LONG 6")

07 WEATHER PROOFING CONNECTION
SCALE: NTS

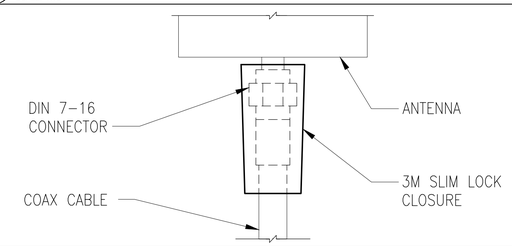

VALMONT WEATHERPROOFING 3M SLIM LOCK CLOSURE	
PART #	APPLICATION
SLC-716	WEATHERPROOF DIN 7-16 & 1/2" COAX CONNECTION

08 WEATHER PROOFING CONNECTION AT ANTENNA
SCALE: NTS

EQUIPMENT GROUNDING SYSTEM

G4

CONSTRUCTION MANAGEMENT REQUIREMENTS (CMRs)

BIO CMR 1: Pre-Construction Survey for Nesting Birds

To the extent feasible, the Contractor shall schedule construction activity on non-urban sites outside of nesting bird season. If construction takes place during the bird nesting season (determined by CDFW to be February 15 to August 31 for non-raptors and February 1 to August 31 for raptors) a qualified avian biologist shall perform preconstruction surveys for bird nesting activity, within seven days before construction activity begins at a project site. If nesting birds are detected, the avian biologist shall determine appropriate, additional measures from those listed, below. These additional measures shall be implemented by the Contractor and may include any combination of the following:

1. If during the preconstruction survey, no breeding or nesting activities (e.g., territorial displays, courtship, the carrying of nesting material, nest construction, or brooding) are detected within 500 feet of the proposed work and staging areas, construction activities that do not involve the clearing or removal of vegetation may proceed.

2. If bird breeding/nesting activity is confirmed, work activities within 250 feet for non-raptors, 500 feet for non-state or federally listed raptors, 0.5 mile for listed raptors and fully protected species shall be delayed until the young birds have fledged and left the nest. A work area buffer zone around any active nests shall be demarcated, indicating where work may not occur. The buffer distances may be reduced if warranted for the continuation of work based on site characteristics such as topography, location or existing structures, and/or additional CMRs such as sound barriers and/or blinds that minimize disturbance to the nesting birds. Reductions of buffers for listed or sensitive species, raptors and fully protected nesting species shall be developed in cooperation with USFWS and/or CDFW, depending on the species. Project activities may resume in this area once the biological monitor has determined that the nest(s) is no longer active.

3. For sites with a high potential for nesting birds, due to a high prevalence of potentially suitable nest site, follow-up surveys for nesting birds will be performed weekly during the peak of the nesting season (March 1 – June 15).

BIO CMR 2: Golden Eagle (*Aquila chrysaetos*) and Bald Eagle (*Haliaeetus leucocephalus*)

Status of Golden Eagle: *California Department of Forestry and Fire Protection Sensitive, California Department of Fish and Wildlife Fully Protected, California Department of Fish and Wildlife Species of Special Concern, California Department of Fish and Wildlife Watch List.*

Status of Bald Eagle: *Federally Delisted, State Endangered, California Department of Forestry and Fire Protection Sensitive, California Department of Fish and Wildlife Fully Protected, U.S. Forest Service Sensitive, U.S. Fish and Wildlife Service Bird of Conservation Concern.*

Bald Eagle Nesting Season: January 1 – August 31 (CDFW 2013).

Golden Eagle Nesting Season: January 1 – September 30 (Digital Desert 2013).

To the extent feasible, the Contractor shall schedule construction activity on sites of concern for bald and golden eagles outside of nesting season. An approved avian biologist shall conduct

preconstruction surveys for bald and golden eagle if work occurs during the nesting season(s). Nest surveys shall be conducted within a radius of 4,000 feet from the project footprint, within 7 days prior to the onset of construction. If nests of golden or bald eagles or nesting activity (e.g. territorial displays, courtship, the carrying of nesting material, nest construction, or brooding) are detected within 0.5 mile of the site, non-disturbance measures shall be developed in cooperation with the appropriate wildlife agency, as determined by the Project Biologist. Such measures may consist of blinds to shield construction activities from the nest or performing construction work outside of the golden or bald eagle nesting season.

BIO CMR 3: Burrowing Owl (*Athene cunicularia*)

Status: *California Species of Special Concern, Bureau of Land Management Sensitive, U.S. Fish and Wildlife Service Bird of Conservation Concern.*

Nesting Season: February 1 – August 31.

To the extent feasible, the Contractor shall schedule construction activity on sites of concern for burrowing owl outside of burrowing owl nesting season.

Measures for detecting nesting and resident burrowing owls and preventing project related impacts were developed using the guidance presented in the Staff Report on Burrowing Owl Mitigation (CDFG 2012). An approved biologist shall perform preconstruction surveys for nesting and resident burrowing owls no more than 30 days prior to the onset of construction activities.

The 2012 CDFG Staff Report on Burrowing Owl Mitigation lists the following activities as examples of those that have the potential to take burrowing owls, their nests or eggs, or destroy or degrade burrowing owl habitat: grading, disking, cultivation, earthmoving, burrow blockage, heavy equipment compacting and crushing burrow tunnels, levee maintenance, flooding, burning and mowing (if burrows are impacted), and operating wind turbine collisions (collectively hereafter referred to as “projects” or “activities” whether carried our pursuant to CEQA or not). In addition, the following activities may have impacts to burrowing owl populations: eradication of host burrowers; change in vegetation degradation of nesting, foraging, over-wintering or other habitats; destruction of natural burrows and burrow surrogates,; and disturbance which may result in harassment of owls at occupied burrows.

Pre-construction Surveys

Pre-construction surveys for nesting burrowing owls shall take place in suitable habitats within 1,640 feet (500 meters) of the project footprint if the project takes place during the nesting season (Feb 1-August 31). Preconstruction surveys for resident burrowing owls shall take place within 500 feet (152 meters) if construction takes place outside of the breeding season (September 1 – January 31). Surveys for nesting or resident owls will be conducted within 7 days prior to the onset of construction.

Site Surveillance

Burrowing owls may attempt to colonize or re-colonize areas within the survey area; thus, ongoing surveillance will be conducted daily within the project footprint by the biological monitor, and weekly outside of the project footprint, within the 1,640 foot survey area during the nesting season, and 500 feet outside of the nesting season. The surveillance frequency/effort should be sufficient to detect burrowing owls if they return. Subsequent to their new occupancy or return to the site,

take avoidance measures shall ensure with a high degree of certainty that individual owls will not be [injured or killed]. The frequency of site surveillance and size of the survey area may be reduced if conditions so warrant, in cooperation with CDFW, USFWS, and or BLM, as appropriate. Circumstances that may warrant a reduction in surveillance frequency or reduction in size of the survey area include low quality of habitat for burrowing owls and site features that would substantially reduce the potential for burrowing owls to be affected by project related activities, such as terrain, buildings, or other visual and sound obstructions.

Avoidance

1. The project shall avoid disturbing occupied burrows during the nesting period (February 1 - August 31) and shall avoid impacting burrows occupied during the non-breeding season by migratory or non-migratory resident burrowing owls (September 1 – January 31).

2. The project may not fumigate, use treated bait or other means of poisoning nuisance animals in areas where burrowing owls are known or suspected to occur (e.g., sites observed with nesting owls, designated use areas).

3. An approved, avian biologist with experience and expertise in burrowing owl ecology and management shall develop a worker awareness program to increase the worker's recognition of and commitment to burrowing owl protection. The worker awareness program will consist of a short presentation at the worker safety tailboard meeting prior to the commencement of construction activities and will be provided to new workers as they are assigned to the project site.

4. If the preconstruction surveys described above detect burrowing owl during the nesting season (i.e., within 1,640 feet (500 meters) of the project footprint or, if surveys outside of the nesting season detect resident burrowing owls within 500 feet (152 meters), the location of the burrowing owl dens shall be mapped and the CDFW, USFWS, and or BLM, as appropriate shall be informed by the approved biologist of their location, as well as measures that are being taken in order to avoid impacts to the owls.

5. Outside of the breeding season, a biological monitor assigned to the site shall mark a non-disturbance buffer circle around the burrow using signage and flagging for the burrowing owl dens. The diameter of the buffer shall be determined on a case-by-case basis in cooperation with CDFW, USFWS, and or BLM, as appropriate, but shall typically range from 160 feet (50 meters) to 1,640 feet (500 meters) depending on the type and extent of the disturbance, duration and timing of the impact, visibility and sensitivity of the burrowing owls to the impact, and environmental factors such as nest site availability, predators, prey availability, burrowing mammal presence and abundance, and threats from other extrinsic factors such as human disturbance, urban interface, feral animals, invasive species, disease or pesticides.

6. During the breeding season, a biological monitor assigned to the site shall mark a non-disturbance buffer circle around the burrow using signage and flagging for the burrowing owl dens. The diameter of the buffer shall be determined on a case-by-case basis in cooperation with CDFW, USFWS, and or BLM, as appropriate, but shall typically range from 250 feet (76 meters) to 1,640 feet (500 meters) depending on the type and extent of the disturbance, duration and timing of the impact, visibility and sensitivity of the burrowing owls to the impact, and environmental factors such as nest site availability, predators, prey availability, burrowing mammal presence and abundance, and threats from other extrinsic

factors such as human disturbance, urban interface, feral animals, invasive species, disease or pesticides.

BIO CMR 4: Pre-Construction Surveys and Avoidance Measures for Western Snowy Plovers

To the extent feasible, the Contractor shall schedule construction activity on sites outside of western snowy plover nesting season.

However, if work is scheduled to take place during the western snowy plover nesting season (February 15 – August 30), the following measures will be implemented:

1. Permitted biologist(s) shall perform a preconstruction survey for the western snowy plover within 500 feet of the project footprint. If SNPL are detected during preconstruction surveys and the permitted biologist confirms nesting activity (prolonged occupation of the site, courtship behavior, territorial displays, brooding), the following measures shall be implemented by the Contractor under the direction of permitted biologists and in cooperation with the USFWS. If SNPL are determined to be present within 500 feet of project footprint, background noise levels shall be measured. Construction noise levels will be measured and monitored to ensure that SNPL are not subjected to sound levels above 60 dBA Leq, or an increase above background if background noise levels are higher than 60 dBA Leq. If SNPL would be subject to such noise levels, the Contractor shall implement the following measures:

2. Sound barriers such as ¾-inch plywood or hay bales, limiting the time and duration of construction activity, modifying construction methods, and/or delaying construction until the end of the nesting season.

3. If after construction of sound barriers it is determined that construction work would nonetheless subject nesting SNPL to sound levels above 60 dBA Leq or background, if background levels are already higher than 60 dBA Leq, the work shall be completed outside of the nesting season (between September 1 and February 14).

4. All areas identified as potentially suitable SNPL habitat including USFWS Designated Critical Habitat shall be strictly avoided. These areas will have been marked by approved biologists, using highly visible means such as flagging and signage prior to the onset of construction activities

5. Construction or installation work at these sites during the nesting season shall be monitored at least weekly by a permitted biologist who will immediately implement measures for nesting SNPL should evidence of nesting activity activities be observed.

6. Any construction or installation work at these sites shall limit noise, dust, nighttime lighting, and human presence to the greatest extent possible.

7. Monthly monitoring letter reports of construction activities and their effects on biological resources shall be provided to the appropriate wildlife agency (USFWS/CDFW).

BIO CMR 5: Pre-Construction Surveys and Avoidance Measures for Bats

To the extent feasible, the Contractor shall schedule construction activity on sites of concern roosting bats outside of bat roosting season.

Within 30 days prior to construction activities (including vegetation clearing and/or trimming), an approved biologist shall conduct a pre-construction survey for the presence of roosting bats within 500 feet of the project footprint.

Active Nursery Roosts:

1. If active nursery roosts are found (typically between April 15 and August 1) within 500 feet of the project footprint, a work exclusion buffer of 500 feet would be cordoned off by the approved biologist. No work may be conducted within the work exclusion buffer until an approved biologist, in consultation with the Project Biologist, has determined that the juvenile bats are able to forage independently.

Non-maternal Roosts:

1. If the approved biologist finds evidence of roosting bats within 500 feet of the project site, prior to initiation of construction, a biological monitor shall be designated to monitor construction activities and advise construction personnel of the procedures for protecting bats and their habitats during the project, so long as the bat roost is in use by bats. If, as a result of pre-construction surveys, exclusion zones around trees or buildings are established to protect roosting bats, the biological monitor shall advise the construction crews of those areas, the requirement to maintain work exclusion zones (#4) and shall enforce the maintenance of those zones.

2. The biological monitor shall provide at least one bat safety training for the entire crew and shall provide the training for construction workers who are new to the site, prior to their starting work. The biological monitor shall also provide onsite direction for addressing habitat- or species-specific issues.

3. Workers shall be instructed regarding health risks and to avoid direct contact with bats.

4. Because bats are nocturnal, work activities shall not be conducted within 100 feet of any structure or tree identified as bat roosts (where evidence of present roosting bats has been identified) between sunset and sunrise. Airspace access to and from any bat roost is to remain approximately the same. Bird-exclusion netting must not be used and access for bats shall not be blocked off. No clearing and grubbing shall occur within 100 feet of bat roosts. Night lighting for construction activities is not to be used within 100 feet of any bat roost. Internal combustion equipment, such as generators, pumps, and vehicles are not to be parked, nor operated, under or adjacent to any occupied roosts. Personnel are not to be within 100 feet of a bat roost between sunset and sunrise.

5. Under the supervision of the biological monitor, workers should cover unoccupied spaces that may later become bat roosts using material that will not trap birds or bats, such as plywood or tarps. Bird netting must not be used.

BIO CMR 6: Construction Monitoring

A biological monitor is required to be present whenever project related activities have the potential to impact sensitive or native species; and to verify applicable CMRs which avoid this potential are implemented. Note that the timing of construction activities may affect whether this CMR is required.

The biological monitor has the authority to halt, or limit, or adjust the timing or duration of work related activities at the site they are monitoring, or to suggest alternative methods, in order to fully and effectively implement CMRs. This authority applies to discrete work related activities up to and including all work activities at the site. However, the biological monitor is required to work with the construction crews to assist them in the completion of the project in a legal and timely manner while avoiding potential impacts to native flora, fauna, or habitats. Any unresolved disagreement between the Contractor and biological monitor shall be brought to the attention of the Project Biologist, who oversees and directs the work of all of the approved biologists, biological monitors, and permitted biologists, who will seek to resolve the problem and will also contact LA RICS if necessary.

The biological monitor shall conduct pre-construction meetings with equipment operators to address project specific biological constraints including the following:

1. Avoidance and protection measures for native vegetation removal.
2. Locations of habitat protection zones.
3. Avoidance and protection measures for known bird nests or other faunal resources.
4. Avoidance and protection measures for wetlands or other protected waters.
5. Work time restrictions.
6. Noise level restrictions.
7. Lighting restrictions.
8. Specific protection measures for fauna if they occur in the work area.
9. Contact information for approved and permitted biologists, and the Project Biologist (business cards, phone numbers, etc.).

The biological monitor shall be present at all times during ground disturbing activities such as grading or vegetation removal. In the event that state or federally listed wildlife species or species of special concern are detected within 500 feet of the project site, or CDFW Fully Protected Species are detected within 0.5 mile of the project site, project activities shall cease pending resolution of the potential for impacts, which would consist of measures listed under the headings for individual species mentioned in this document. Resolution may include notification of, and coordination with, the appropriate state or federal regulatory agencies.

The Project Biologist shall determine appropriate timing for and conduct sweeps of the project work areas to detect any small mammals, birds, or herpetological fauna that may have entered ditches, trenches, equipment, etc.

The biological monitor shall monitor and inspect the installation of exclusion fencing and construction activities that occur within close proximity to the identified project area.

Whenever he/she is on-site, the biological monitor shall complete Construction Monitoring Forms detailing that day's construction activities, whether activities were compliant with the aforementioned project design features, and any corrections and/or discussions made with site personnel. The biological monitor shall provide photo documentation for significant monitoring activities.

1. Following ground disturbing activities, the frequency and duration of monitoring shall be based on the nature of the work being performed and its potential effect on protected biological resources. Appropriate timing for frequency and duration of monitoring shall be determined by the Project Biologist, in consultation with the biological monitor. The Contractor shall designate appropriate personnel to maintain communications with the biological monitor and the Project Biologist. For sites where CMRs have been implemented for special status species, the biological monitor shall remain on-site for the installation of all physical CMRs and during periods when construction equipment is active on site.

2. For non-urban sites with the potential for non-listed small mammals, amphibians or reptiles to enter the site, the biological monitor shall ensure that physical CMRs are in good repair and are functioning as intended to prevent unlisted faunal species from entering work areas. For sites where CMRs have been implemented for non-special status species, the biological monitor shall remain on-site for the installation of all physical CMRs and at least for the first three days of construction in order to ensure the proper function of all CMRs and to make any necessary adjustments or repairs. However, if after several days there have been no incidences of non-listed species entering work areas, the Project Biologist may determine a reduction in monitoring is warranted. If a non-listed species is detected on site and a biological monitor is not present at the site, the Contractor's designee shall contact the Project Biologist, who shall immediately arrange for an approved biologist to go the site and determine appropriate handling or monitoring for the animal.

The biological monitor shall ensure that designated habitat protection zones and exclusion areas are conspicuously marked so as to indicate where no construction activities are permitted.

In the event that exclusion fencing is required, the biological monitor shall be responsible for monitoring and inspecting the fence on an appropriate schedule, and making minor repairs to the fence whenever necessary.

A written list of procedures (also known as a clean site protocol) shall be established and posted on-site at all times. Specifically the protocol will list requirements including:

- All trash of any size will be placed and contained in covered containers. No trash of any kind will be released to the environment. This includes any food items, small or large pieces of plastic or wire, and any small metallic objects (i.e., nuts, bolts, wire nuts).

The biological monitor shall determine if and when special management provisions are necessary for the protection of the California condor. Any site that has the potential for condors to be present requires that potential perches on human structures is precluded, that the project site is maintained in clean condition to prevent the ingestion of microtrash by condors, and that the following provisions are fully implemented:

- A qualified biologist will prepare an informational handout to be presented at an environmental awareness program to personnel who will be on-site, including, but not limited to, contractors, contractors' employees, supervisors, inspectors, and subcontractors; all persons working on-site must participate in this training. This program will provide, at a minimum, information concerning the biology and distribution of the California condor, legal status, and possible occurrence in the project area, measures to avoid impacts to condors, procedures to be implemented to eliminate microtrash from the site, and what to do in case of California condor encounters.

- Within five days of planned construction, the biologist is to contact USFWS Hopper Mountain National Wildlife Refuge (805-644-5185) to determine the locations and status of any condors in or near the project area. The biologist will inform the construction manager if condors have recently been recorded from the project area. If condors are frequenting the area, the construction manager and biologist will discuss appropriate measures with LA-RICS and USFWS to avoid effects to condors.

- Anti-perch devices would be affixed to any elevated, horizontal structures suitable for perching by raptors, ravens, vultures, or other large birds.

- During construction and operations of the facility, all workers shall avoid any interaction with condors, and shall immediately stop work if condors are present in the project area.

- If condors are on-site the construction manager or environmental monitor will immediately contact the USFWS Ventura office (805-644-1766). Once condors leave on their own accord or as a result of techniques employed by permitted USFWS personnel, on-site work may continue.

- If condors are found roosting within 0.5 mile of the project site, no construction activity will occur between 1 hour before sunset and 1 hour after sunrise or until the condors leave the area.

- If condors are documented nesting within 1.5 miles of the project site (as determined by nesting bird surveys and/or information from USFWS condor program), no construction activity will occur until further authorization is received from USFWS.

- The contractor shall keep a regulated work area free of litter and trash, and shall prepare plans and implement spill containment measures within the project area for all activities and for all vehicles.

- The construction site shall be cleaned up at the end of each day that work is being conducted (e.g., trash removed, scrap materials picked up) to minimize the likelihood of condors and other wildlife visiting the site and consuming microtrash, discarded food, or other substances.

- All wires, cables, and other items that could entangle a condor are to be securely fastened down or removed from site.

- Verification of site cleanup by an environmental monitor would occur at the end of each work day and upon completion of construction activities.

BIO CMR 7: Non-listed Amphibians, Reptiles, and Small Mammals

Non-listed amphibians, reptiles, and small mammals will be protected using the following measures:

1. A biological monitor, assigned to the project site will perform daily sweeps prior to construction activities to ensure that any non-listed amphibians, reptiles, and small mammals are not in the work area and will remove any that are detected. These animals will be moved to a location either on the site (but out of the work area), or immediately off-site, where they are not in any apparent danger from project related activities or non-project related threats such as pets, vehicular traffic, or predation.

2. Any amphibian, reptiles, and small mammal translocation will be conducted by the biological monitor. Workers will not be allowed to handle, harm, or kill any wildlife encountered on the project site.

3. Prior to the start of the first work day, the biological monitor shall train the crew on procedures for protecting non-listed amphibians, reptiles, and small mammals. New crew members will be trained immediately following morning tailboard safety meetings as they are assigned to the project site. The biological monitor will ensure that the project foreman or site superintendent has his/her and the Project Biologist's cell phone number.

4. Site specific CMRs shall be developed if necessary and feasible by the biological monitor and project foreman or site superintendent. Such CMRs may include barrier silt fencing in strategic areas to keep animals from entering work areas.

5. The frequency and duration of biological monitoring for amphibians, reptiles and small mammals may be reduced by the Project Biologist if after several days it has become apparent that the project does not pose a potential harm to these species.

BIO CMR 8: Open Trenches and Ditches

Small mammals, amphibians, and reptiles may enter open trenches and ditches. Large mammals may be injured by falls into these features, if the open ditches and trenches are left open when work sites are unattended. To avoid and minimize the amount of the open trenches, the following measures must be adhered to by the Contractor:

1. Do not leave trenches open overnight, or for extended periods when personnel will not be present at the site. Cover trenches if they cannot be filled at the close of the work day.

2. Keep trenching and back-filling crews close together at any given time.

3. If trenches cannot be back-filled immediately, escape ramps should be constructed at least every 90 meters. Escape ramps can be short lateral trenches sloping to the surface or wooden planks extending to the surface. The slope should be less than 45 degrees. Trenches that have been left open overnight should be inspected and animals removed prior to back-filling using methods consistent with project CMRs.

4. For non-listed animal species, biological monitors and/or qualified biologists may utilize active removal techniques as a complement to passive removal techniques (e.g., placement of barriers) to avoid unreasonable delays to construction. Active removal

techniques include placing small mammals or herpetofaunal species in a bucket for relocation out of harm's way.

5. Any observation of listed species will be reported to the Project Biologist within 24 hours, who in turn will notify the USFWS and other regulatory agencies, as appropriate, within 48 hours of occurrence. All work will cease if a federally-listed species is detected onsite. Work will only resume after the qualified biologist confirms the animal is off-site and would not be adversely affected.

6. For listed species, qualified biologists may restrict access of listed small mammals or herpetofaunal species to the work area using non-harassment, passive techniques, such as placing a barrier (e.g., boards) between the organism and the active excavation area.

BIO CMR 9: Establish Habitat Protection Zones

To avoid impacts to sensitive or native habitats outside of, but adjacent to the work area, the Contractor is required to implement the following measures:

1. Construction activities shall begin only after a biologist has established and clearly marked habitat protection zones using highly visible means such as signage, flagging, and temporary fencing where necessary, explained the significance of the habitat protection zones and explained the responsibilities of the Contractor in avoiding these areas, and approved the work area(s).

2. The Contractor shall ensure that all personnel and equipment stay out of the habitat protection zones, which shall have been clearly marked using signs, flagging, and/or temporary fencing.

3. A biological monitor shall be present during grading or any modification to vegetation (including non-native, previously-disturbed, ornamental, and landscaped vegetation) in order to ensure that non-approved work areas are not entered and that native vegetation is not removed, trimmed, or disturbed and no rare plants or host plants are accidentally damaged or destroyed.

BIO CMR 10: Protect Native Vegetation

Disturbance to native vegetation is not anticipated to occur on this project. An approved biologist shall ensure that native vegetation adjoining the project footprint has been clearly marked using highly visible means such as signage, flagging or fencing. Construction personnel shall not be allowed into habitats with native vegetation except under supervision by the biological monitor. No equipment may be staged within the native habitat areas and they shall not be used for storage. Additionally, the Contractor shall implement or comply with the following measures:

1. Do not remove and/or grade plants or topsoil where stands of native vegetation occur.

2. Erosion caused by construction activities upslope from native vegetation shall be minimized by means of weed-free straw wattling, silt fencing, or other barriers as necessary to prevent runoff into the native habitat.

3. Avoid project activities that unnecessarily disturb or compact the soil surface which could increase erosion, sediment transport, and make future native plant establishment more difficult.

4. Clearance of landscaped or non-native plants shall be conducted under the supervision of a qualified biological monitor, and consistent with the other requirements of these CMRs, to ensure that direct and indirect impacts to wildlife and their habitat are avoided.

5. Utilize existing access roads, pads, and previously developed or disturbed areas as much as feasible in order to avoid impacts to sensitive vegetation.

6. Disturbance of heavily infested non-native and ruderal vegetation areas should be avoided to reduce potential to spread invasive "weedy" species as determined by the California Invasive Plant Council 2011 and California Department of Food and Agriculture lists (containing federally listed-species). Any disturbance in these areas would require presence of a biological monitor.

BIO CMR 11: Limit the Spread of Invasive Plants

To minimize the spread and establishment of invasive plant species into the project area, all off-road heavy equipment used by the Contractor during project implementation should be free of noxious or exotic weeds and seeds before entering the project area. Vehicle washing, in compliance with site-specific guidelines shall be implemented for all ground disturbing activities. Site specific guidelines shall be identified and selected by the Project Biologist and may include some or all of the following measures:

1. Equipment used on the project shall be subject to inspection prior to transiting to or entering project sites to prevent introduction of weed species. Vehicles will be free of mud, dirt and seed when they arrive on site.

2. Provide a vehicle and equipment washing station away from the project site.

3. Use washing equipment at commercial car or truck washing facility.

4. Post-construction landscaping or revegetation shall not include the use of invasive, exotic plant species listed on the California Department of Food and Agriculture's (CDFA) Noxious Weed List (CDFA, 2011) or in the California Invasive Plant Inventory (Cal-IPC 2006).

BIO CMR 12: Post-construction Noxious Weed Survey

Post-construction surveys for noxious weeds shall be conducted to determine the presence of invasive species. Surveys shall cover the project footprint and will take place during April – May, when the greatest proportion of noxious plant species are growing and identifiable, but have not set seed. Any populations of noxious weeds shall be immediately treated under the direction of a botanist.

BIO CMR 13: Mohave Ground Squirrel (*Xerospermophilus mohavensis*)

Status: *California Department of Fish and Wildlife Threatened*

To the extent feasible, the Contractor shall schedule construction activity during the aestivation period for Mohave ground squirrel. Recommended timing for construction at site(s) where multiple species (including Mohave ground squirrel, desert tortoise, and nesting birds) have potential to occur near is December and January.

For site(s) where suitable habitats for the Mohave ground squirrel have been identified within 500, the following measures shall be implemented by the Contractor in order to protect Mohave ground squirrels.

1. A temporary fence shall be constructed meeting CDFW specifications that would greatly reduce the potential for a Mohave ground squirrel from accidentally entering the site. The construction of this fence would be overseen by a biologist who is familiar with the CDFW specifications.

2. A biological monitor shall ensure that Mohave ground squirrels that make their way into the fenced enclosure do not remain there. The biological monitor shall be responsible for opening the fence and allowing the animal to leave on its own. However, if the animal needs to be handled, a biologist with the appropriate permits and permission from CDFW shall be contacted to remove and release it outside of the enclosure.

3. The biological monitor shall have the authority to stop work at the project site, and must stop work related activities that could potentially harm the animal until it has left the site. The biological monitor shall remain present for the duration of construction activities.

4. The Contractor shall designate appropriate personnel to maintain communications with the biological monitor and the Project Biologist. If the Contractor's designee determines that the removal of a Mohave ground squirrel is required and a biological monitor is not present at the site, he/she shall contact the Project Biologist, who shall immediately arrange, after consultation with CDFW and BLM, for an approved biologist to go the site and determine appropriate handling or monitoring for the animal.

BIO CMR 14: Desert Tortoise (*Gopherus agassizii*) Preconstruction Surveys and Monitoring

Status: *U.S. Fish and Wildlife Service Threatened, California Department of Fish and Wildlife Threatened*.

To the extent feasible, the Contractor shall schedule construction activity during the aestivation period for desert tortoise. Recommended timing for construction site(s) where multiple species (including the Mohave ground squirrel, desert tortoise, and nesting birds) have potential to occur is December and January; however, federally-listed species could be encountered at any time of year.

The following avoidance measures shall apply to the Contractor:

1. A biologist under contract to LA-RICS shall perform preconstruction surveys for the desert tortoise within 30 days prior to the implementation of the project, and day-of-construction sweeps of the site for the species.

2. Exclusionary fencing meeting the specifications described in the Desert Tortoise Field Manual (USFWS 2009) shall be constructed under the supervision of a qualified biologist

who is familiar with the construction requirements. Exclusionary fencing shall be placed surrounding all project areas subject to vehicle and heavy equipment access, including access roads, work areas, and staging areas.

3. A qualified biologist shall be present through the duration of construction activity.

4. All vehicles shall observe a speed limit of 5 miles-per-hour in the project footprint and on non-public access roads.

5. All on-site personnel shall thoroughly check for desert tortoises under any parked vehicle or equipment immediately prior to moving or operating the vehicle or equipment. In areas the qualified biologist determines there is a high likelihood of encountering the desert tortoise, vehicles will be inspected more frequently, with particular attention to surveying for small desert tortoise individuals.

6. No persons on the site are authorized to “take” a desert tortoise. “Take” means to harass, harm, pursue, hunt, shoot, wound, kill, trap, capture, or collect, or to attempt to engage in any such conduct. Attempts to approach or touch a desert tortoise are prohibited. During the pre-construction meeting as described in BIO CMR 6, the biological monitor shall describe the general biology of the desert tortoise and the project restrictions designed to avoid adverse effects to the species.

7. All measures described in BIO CMR 6 (Construction Monitoring), BIO CMR 7 (Non-listed Amphibians, Reptiles, and Small Mammals), BIO CMR 8 (Open Trenches and Ditches), BIO CMR 9 (Establish Habitat Protection Zones) and BIO CMR 18 (Hazardous Substance Management) shall be adhered to by the Contractor.

8. In the event a desert tortoise is detected on the site after installation of exclusionary fencing, the animal shall be allowed to exit on its own by leaving an opening in the fence. All work shall cease until the animal is off-site. The qualified biologist must be onsite to confirm the animal has retreated from the project site on its own. Work may resume only after approval by the qualified biologist.

9. All trash shall be properly contained, removed from the work site, and disposed of on a daily basis.

10. The Contractor shall designate appropriate personnel to maintain communications with the biological monitor, qualified biologist, and the Project Biologist. Any observation of desert tortoise will be reported to the Project Biologist within 24 hours, who in turn will notify USFWS and other regulatory agencies, as appropriate, within 48 hours of occurrence.

11. Any elevated horizontal surface associated with the monopole that may be suitable as perch or nest sites for raptors, raven, vultures, or other large bird shall include anti-perch devices to deter the use of these facilities as perches or nest sites.

12. No dogs shall be allowed at the site during construction or maintenance operations.

BIO CMR 15: Avoidance Measures for Arroyo Toad (*Bufo microscaphus californicus*)

Status: *U.S. Fish and Wildlife Service Endangered, California Department of Fish and Wildlife Species of Special Concern*

To the extent feasible, the Contractor shall schedule construction activity on sites of concern for arroyo toad during the aestivation period for the species. Aestivation generally occurs between August and January. In the event that construction activities cannot occur during the aestivation period, the following measures shall apply. These conservation measures are consistent with the Recovery Plan for the Arroyo Southwestern Toad (USFWS 1999).

1. Prior to commencement of construction activities, a qualified biologist (knowledgeable of the ecology of arroyo toads and other local amphibians) shall conduct a training session for all construction personnel and the biological monitors. At minimum, the training shall include: 1) a description of arroyo toad habitat; 2) avoidance measures being implemented for the arroyo toad; and 3) identification of the boundaries of permitted access and work areas.

2. A qualified biologist shall be present at the work site at all times until construction is completed.

3. The Contractor shall designate appropriate personnel to maintain communications with the biological monitor, qualified biologist, and the Project Biologist. Any observation of arroyo toad will be reported to the Project Biologist within 24 hours, who in turn will notify the USFWS and other regulatory agencies as appropriate, within 48 hours of occurrence.

4. No persons on the site are authorized to “take” an arroyo toad. “Take” means to harass, harm, pursue, hunt, shoot, wound, kill, trap, capture, or collect, or to attempt to engage in any such conduct. Attempts to approach or touch an arroyo toad are prohibited.

5. In the event an arroyo toad is detected on the site, the animal shall be allowed to exit on its own by leaving an opening in the fence. All work shall cease until the animal has moved off-site. Work may resume only after approved by a qualified biologist.

6. Daily pre-construction sweeps of the construction area shall be conducted by a qualified biologist.

7. All trash shall be properly contained, removed from the work site and disposed of on a daily basis.

8. All fueling and vehicle/equipment maintenance involving the transfer or replenishment of fluids shall be completed within existing paved areas or designated fueling areas designed to contain fuel drips farther than 100 feet from any watercourse. Prior to the onset of work, the Project Biologist under contract to LA-RICS shall ensure that the Contractor has prepared a plan to allow for a prompt and effective response to any accidental spills into the drainage. All workers shall be informed of the importance of preventing spills and the appropriate measures to take should a spill occur.

9. Maintenance of vehicles other than the transfer or replenishment of fluids and other equipment, and staging areas, shall be located offsite and more than 60 feet from any drainage connecting to the aquatic habitat.

10. Access routes, staging areas, temporary grading, and the extent of all construction-related activity shall be limited to the minimum necessary to complete the project. Routes and boundaries shall be clearly demarcated and located outside of the riparian corridor.

11. Entry shall not be permitted into any wetlands, streams, arroyos, ephemeral drainages, or riparian areas by workers or equipment. Any such habitats will be clearly marked to aid the construction crew, using signage, flagging, and/or temporary fencing.

12. A "drift fence" of silt fence material at least two feet high shall be installed wherever construction is taking place in the vicinity of suitable arroyo toad habitat. The fence shall be constructed by the Contractor and must be in place far enough ahead of the construction to effectively exclude toads from the workspace for a period of 24 hours prior to construction. This fence shall exclude foraging arroyo toads from the work area and shall be cleared every morning by a qualified biologist before construction begins. The placement of the silt fencing and its construction shall be directly supervised by a qualified biologist.

13. Construction shall be limited to daylight hours.

14. Vehicle, truck, and equipment speeds shall be 15 miles/hour or below within all work areas and on non-public access roads that have been clearly marked with signage and/or flagging by qualified biologists. Speed limits may be further reduced at the discretion of the biological monitor or a qualified biologist.

15. The project construction shall avoid stream channels entirely. Stream channels will be clearly marked using signage, flagging, and/or temporary fencing.

BIO CMR 16: Monarch Butterfly (*Danaus plexippus*)

Status: *None*

Exhaust and low frequency vibrations, inherent to the operation of heavy equipment, as well as activities involved with the trimming/removal of trees on the project site, may disturb and/or dislodge roosting monarchs during the overwintering season (Oct 1 – Feb 28), should they be present. This would increase colony disturbance and butterfly mortality. The severity of this impact shall depend on the distance of roosting butterflies from the area where the equipment is being operated.

Preconstruction surveys for monarch butterflies will be performed by approved biologists concurrently with nesting bird surveys. If monarch butterfly overwintering colonies are found within 100 feet of the project footprint, avoidance measures will be developed in cooperation with CDFW.

Bio CMR 17: Wetlands and Other Waters

None of the sites in the PSBN Project contain potentially disturbed wetlands or waters within the work area or the PSBN site boundary. Soil disturbance, if any, at PSBN sites will be less than 0.1 acres. To avoid impacts to wetlands and other waters, BMPs shall be selected by the Project Biologist and implemented by the contractor to control sediment and pollutants in storm water and non-storm water runoff associated with construction. BMPs for sediment and pollutant control may include, but are not limited to, the following.

COMMON BEST MANAGEMENT PRACTICES FOR STORM WATER POLLUTION CONTROL

BMP (designation)	Description
Silt Fence (SE-1)	Woven geotextile attached to supporting poles to detain coarse sediment entrained in sheet flow.
Sediment Basin (SE-2)	Temporary basin formed by excavation or by constructing an embankment so that sediment-laden runoff is temporarily detained under quiescent conditions, allowing sediment to settle out before the runoff is released.
Fiber Rolls (SE-5)	Straw, coir, or other materials bound into a tight tubular roll wrapped by netting placed at the face or toe of slopes along the contours to intercept runoff, reduce flow velocity, release runoff as sheet flow, and capture sediment.
Gravel Bag Berm (SE-6)	Series of gravel-filled bags placed along a contour to intercept runoff, reduce flow velocity, release runoff as sheet flow, and capture sediment.
Sandbag Barrier (SE-8)	Series of sand-filled bags placed along a contour to intercept runoff, reduce flow velocity, release runoff as sheet flow, and capture sediment.
Straw Bale Barrier (SE-9)	Straw bales placed along a contour, usually at the base of slopes, to intercept sheet flows, pond sheet-flow runoff, and allow sediment to settle.
Storm Drain Inlet Protection (SE-10)	Sediment filter or an impounding area in, around or upstream of a storm drain or other inlet that temporarily ponds runoff, and allows sediment to settle before runoff enters the storm drain or inlet.

Source: CASQA. 2012. Storm Water Best Management Practice Handbook Portal: Construction: California Storm Water Quality Association. July update. Portal available only by purchase at https://www.casqa.org/. Accessed January 2014.

Barrier materials used in BMPs shall be certified as weed-free.

Bio CMR 18: Hazardous Substance Management

Hazardous substances shall be managed in accordance with applicable federal and state regulations. BMPs shall be selected by the Project Biologist and implemented by the Contractor to prevent or reduce the discharge of hazardous substances to drainage systems or watercourses to avoid “take” or “harm” to special status species, and substantial adverse effect or adverse modification of habitat areas. BMPs to prevent or reduce the discharge of hazardous substances to drainage systems or watercourses may include, but are not limited to, the following.

COMMON BEST MANAGEMENT PRACTICES FOR HAZARDOUS SUBSTANCES

BMP (designation)	Description
Material Use (WM-2)	Prevent or reduce the discharge of pollutants to watercourses from material use by using non-hazardous products, minimizing hazardous material use onsite, and training employees and subcontractors.
Stockpile Management (WM-3)	Reduce or eliminate storm water pollution from stockpiles of soil, soil amendments, sand, paving materials such as Portland cement concrete (PCC) rubble, asphalt concrete (AC), asphalt concrete rubble, aggregate base, aggregate sub-base or pre-mixed aggregate, asphalt minder and pressure treated wood by covering the stockpiles with plastic covers that would withstand weather and sunlight for the anticipated duration of use.
Spill Prevention and Control (WM-4)	Prevent or reduce the discharge of pollutants to drainage systems or watercourses from leaks and spills by reducing the chance for spills, stopping the source of spills, containing and cleaning up spills, properly disposing of spill materials, and training employees.

Source: CASQA. 2012. Storm Water Best Management Practice Handbook Portal: Construction: California Storm Water Quality Association. July update. Portal available only by purchase at https://www.casqa.org/. Accessed January 2014.

BIO CMR 19: Coastal California Gnatcatcher (*Polioptila californica californica*)

Status: Federal Threatened, *California Species of Special Concern, Migratory Bird Treaty Act*

Nesting Season: February 15 – August 30.

To the extent feasible, the Contractor shall schedule construction activity construction activity on sites of concern for coastal California gnatcatcher outside of nesting season for the species.

When construction activities may affect breeding or non-breeding coastal California gnatcatchers, the following measures will apply:

- For those sites that have potential for coastal California gnatcatcher (*Polioptila californica californica*) within 500 feet of the project work area. Nesting or non-breeding coastal California gnatcatcher could be present. At these sites, a Permitted Biologist will survey for the coastal California gnatcatcher within 10 days prior to initiating construction activities. In the event species are detected, the results of the survey will be submitted to the USFWS for review and approval prior to initiating any construction activities within 500 feet of occupied habitat.

- If an active nest is located, a 500-foot no-construction buffer will be established around each nest site. No construction activities will take place within this buffer zone until the nest is no longer active. However, if construction must take place within the 500-foot buffer, a Biological Monitor will monitor noise at the edge of the occupied gnatcatcher habitat. If the noise meets or exceeds the 60 dB(A) Leq, or if the Biological Monitor

determines that the activities in general are disturbing the nesting activities, the Biological Monitor will have the authority to halt construction activities and will contact the Project Biologist who will in turn contact LA RICS, who will contact the USFWS to devise methods to reduce the noise and/or disturbance in the vicinity. This may include methods such as, but not limited to, turning off vehicle engines and other equipment whenever possible to reduce noise, installing a protective noise barrier between the nesting gnatcatchers and the activities, and working in other areas until the young have fledged.

DEFINITIONS

Notes:

Biological monitors and qualified and permitted biological resources personnel shall be provided by the Contractor. The Contractor is responsible for submitting lists of biologists with appropriate qualifications to serve in these positions to LA-RICS. Submissions must provide sufficient time for LA-RICS to review and approve the biologists to serve in these positions, and to coordinate with resources agencies if required. LA-RICS will provide the Project Biologist and may use the services of the Project Biologist to review biologists' respective qualifications. LA-RICS will require all biologists to attend project-specific training regarding the nature of biological resources in the vicinity of the project sites.

Biological Monitor. A biologist whose duty is to monitor construction activities to ensure all CMRs are being implemented appropriately and completely.

PSBN Site. This is a publically-owned real property parcel, portion of a parcel, or combination of parcels used to define the outer bound of where work could occur at a given PSBN site. Each PSBN site has been pre-designated by LA-RICS, and each contains the work area and project footprint.

Permitted Biologist. A biologist permitted by the U.S. Fish and Wildlife Service or in possession of a valid permit or Memorandum of Agreement with the California Department of Fish and Wildlife, to conduct permit-specific activities that could affect special-status species.

Project Biologist. An LA-RICS resource, the biologist with ultimate responsibility for verification of compliance with applicable regulations, and compliance with CMRs. This individual coordinates the biological resource monitoring work and serves as primary conduit for communication regarding biological resources issues between monitors and specialty biologists, Contractor, regulatory agencies, and LA-RICS authority for the project.

Project Footprint. The actual area that is potentially disturbed during the process of construction. The project footprint is limited to a maximum of 3.600 square feet per site and bounds the actual area where construction and staging occurs. It does not include private or public access roads when they are only used as a means of ingress and egress to and from the project site.

Qualified Biologist. A biologist maintaining specialized skills or experience to perform certain functions using these acquired skills. Biologists experienced with the Desert tortoise or Arroyo toad is considered to be within this definition. They are not allowed to capture or handle any listed species.

Special Status Species. Any species reviewed for this project regulated under FESA, BGEPA, MBTA, managed as Forest Service Sensitive or BLM Sensitive, regulated under CESA, NPPA, or regulated by the state of California as a Fully Protected Species.

Work Area. An area generally defined as that contained within a PSBN site that does not contain native vegetation or serve as habitat for special-status species. These areas will be determined by the Project Biologist during preconstruction surveys. Work area also represents the maximum area on a PSBN site where work could occur.

REFERENCES FOR BIOLOGICAL CMRS

California Burrowing Owl Consortium 1993. *Burrowing Owl Survey Protocol and Mitigation Guidelines.* Website: http://www.dfg.ca.gov/wildlife/nongame/docs/boconsortium.pdf. Accessed: June 5, 2013.

CDFW 2013. California Department of Fish and Wildlife*. Bald Eagles in California*. Website: http://www.dfg.ca.gov/wildlife/nongame/t_e_spp/bald_eagle/. Accessed May 14, 2013.

Digital Desert 2013. *Golden Eagle; distribution, Abundance, and Seasonality*. Website: http://digital-desert.com/wildlife/golden-eagle.html. Accessed June 21, 2013.

Halterman, M. D., M. J. Johnson, and J. A. Holmes. 2011. *A Natural History Summary and Survey Protocol for the Western Yellow-billed Cuckoo Population*. Draft May 2011.

USFWS 2013. Desert Tortoise (Mohave Population) Field Manual, Chapter 8 Exclusion Fence. Website: http://www.fws.gov/ventura/species_information/protocols_guidelines/docs/dt/dt_fieldmanual/CHAPTER%208.pdf. Accessed June 5, 2013.

USFWS 2001. *Least Bell's Vireo Survey Guidelines*. Website: http://www.fws.gov/ventura/species_information/protocols_guidelines/docs/lbv/leastbellsvireo_survey-guidelines.pdf. Accessed June 5, 2013.

USFWS 2000a. *Service Guidance on the Siting, Construction, Operation and Decommissioning of Communications Towers*. Website: http://www.fws.gov/habitatconservation/com_tow_guidelines.pdf. Accessed June 5, 2013.

USGS 2012. *A Natural History Summary and Survey Protocol for the Southwestern Shallow Flycatcher*. Website: http://pubs.usgs.gov/tm/tm2a10/. Accessed June 5, 2013.

USFWS 1997. *Coastal California Gnatcatcher (Polioptila californica californica) Presence/Absence Survey Guidelines February 28, 1997.* Website: http://www.fws.gov/ventura/species_information/protocols_guidelines/docs/cagn/coastal-gnatcatcher_survey-guidelines.pdf. Accessed June 5, 2013.

2010. A Natural History Summary and Survey Protocol for the Southwestern Shallow Flycatcher. Website: http://pubs.usgs.gov/tm/tm2a10/pdf/tm2a10.pdf. Accessed June 5, 2013.

Wikipedia 2013. *Golden Eagle*. Website: http://en.wikipedia.org/wiki/Golden_Eagle. Accessed May 14, 2013.

CULTURAL RESOURCES - CONSTRUCTION MANAGEMENT REQUIREMENTS (CMRs)

CRM CMR 1: Potential Prehistoric Archaeological Sites in Project Area of Potential Effect

At sites that the California Historic Resources Inventory Information Center (CHRIS IC) records indicate the potential presence of prehistoric archaeological material (artifacts and/or features) in the Area of Potential Effect (APE), qualified archaeological and Native American monitors shall be present during all subsurface excavation for tower or monopole foundations, and during grading for access roads and structure foundations. The APE is defined as a one-half-mile radius surrounding the project location. The Contractor will be informed which locations require the presence of monitors well in advance of construction.

In the event that prehistoric archaeological material is discovered within the APE, the procedures set forth in CRM CMR 3 shall be followed. The archaeological monitor will, at a minimum, have a B.A. in anthropology or related field or will have successfully completed an archaeological field methods school. The monitor will work under the supervision of a Project Archaeologist who meets or exceeds the Secretary of the Interior's Standards and Qualifications. These professional qualifications standards have been published in the Code of Federal Regulations, 36 CFR Part 61. The LA-RICS Authority will have review and refusal over the cultural resource management (CRM) firm to be engaged by the Contractor, which will provide all archaeological personnel described in these CMRs.

CRM CMR 2: Potential Historic Archaeological Sites in Project Area of Potential Effect

At sites that CHRIS IC records indicate the known presence of a National Register of Historic Places listed or eligible site, or other historic structure, in the APE, thereby indicating the potential presence of historic archaeological material (artifacts and/or features), a qualified archaeological monitor shall be present during all subsurface excavation for tower or monopole foundations, and during grading for access roads and structure foundations. The APE is defined as a one-half-mile radius surrounding the project location. The Contractor will be informed which locations require the presence of monitors well in advance of construction.

In the event that historic archaeological material is discovered within the APE, the procedures set forth in CRM CMR 3 shall be followed. The monitor will, at a minimum, have a B.A. in anthropology or related field or will have successfully completed an archaeological field methods school. The monitor will work under the supervision of a Project Archaeologist who meets or exceeds the Secretary of the Interior's Standards and Qualifications. These professional qualifications standards have been published in the Code of Federal Regulations, 36 CFR Part 61. The LA-RICS Authority will have review and refusal over the cultural resource management (CRM) firm to be engaged by the Contractor.

CRM CMR 3: Archaeological Materials Encountered

In the event that a previously unidentified buried archaeological resource is uncovered, the following actions shall be taken:

1. All ground disturbing work within 165 feet (50 meters) of the discovery shall be halted. The qualified archaeological monitor will mark the immediate area with highly visible flagging.

2. The LA-RICS Project Archaeologist shall inspect the discovery and determine whether further investigation is required. If the discovery can be avoided and no further impacts will occur, the resource shall be documented on California State Department of Parks and Recreation cultural resource record forms and no further effort shall be required.

3. If the resource cannot be avoided and may be subject to further impact, the archaeologist shall evaluate the resource and determine whether it is (1) eligible for the CRHR (and thus a historical resource for the purposes of CEQA); or (2) a "unique" archaeological resource as defined by CEQA. If the resource is determined to be neither a unique archaeological nor an historic resource, work may commence in the area following collection and recording of the artifacts.

4. If the resource meets the criteria for either historical or unique archaeological resources, or both, work shall remain halted, and the archaeologist shall consult with LA-RICS Authority staff regarding methods to ensure that no substantial adverse change would occur to the significance of the resource pursuant to CEQA Guidelines Section 15064.5(b). Preservation in place, i.e., avoidance, is the preferred method of ensuring that there are no substantial adverse impacts to cultural resources and shall be required unless there are other equally effective methods. If the archaeological material appears to represent a site, defined as a feature or three or more artifacts in an intact deposit, an archaeological test program (Phase II) may be necessary. The Project Archaeologist will make this determination. Other methods include evaluation, collection, recordation, and analysis of any significant cultural materials in accordance with a Cultural Resources Management Plan prepared by the archaeologist. The methods and results of evaluation or data recovery work at an archaeological find shall be documented in a professional level technical report to be filed with CHRIS.

5. Work may commence upon completion of treatment. Copies of the archaeological survey, study or report shall be submitted to: South Central Coastal Information Center (SCCIC), Department of Anthropology at California State University Fullerton, as approved by the LA-RICS Authority.

CRM CMR 4: Human Remains

In the event that human remains are discovered during construction excavation activities, the following procedure shall be observed:

1. All construction activity shall stop immediately and the Project Archaeologist will contact the Los Angeles County Coroner.

2. The Coroner has two working days to examine human remains after being notified by the responsible person. If the coroner determines the remains to be Native American, the Coroner shall contact the Native American Heritage Commission (NAHC) within 24 hours.

3. The NAHC will immediately notify the person it believes to be the Most Likely Descendent (MLD) of the deceased Native American.

4. The MLD has 48 hours to make recommendations to the property owner, or representative, for the treatment or disposition, with proper dignity, of the human remains and grave goods.

5. If the MLD does not make recommendations within 48 hours the owner shall reinter the remains in an area of the property secure from further disturbance following procedures required by the Public Resources Code, Sections 5097.94, 5097.98, 5097.99, and Health and Safety Code, Section 7050.5.

6. If the owner does not accept the descendant's recommendations, the owner or the descendent may request mediation by the NAHC.

CRM CMR 5: Potential Paleontological Resources in Area

At sites that Los Angeles County Museum of Natural History records indicate the potential presence of paleontological resources in the area, a qualified paleontological monitor shall be present during all subsurface excavation for tower or monopole foundations, and during grading for access roads and structure foundations. The Contractor will be informed which locations require the presence of a paleontological monitor in advance of construction. The LA-RICS Authority will have review and refusal over the paleontological cultural resource firm to be engaged by the Contractor.

In the event that a previously unidentified paleontological resource is uncovered, the following actions shall be taken:

1. All ground disturbing work within 165 feet (50 meters) of the discovery shall be halted. The LA-RICS-approved, qualified paleontological monitor shall divert or direct construction activities in the area of an exposed fossil in order to facilitate evaluation and, if necessary, salvage of the exposed fossil.

2. A paleontologist shall inspect the discovery and determine whether further investigation is required. If the discovery can be avoided and no further impacts will occur, no further effort shall be required.

3. If the resource cannot be avoided and may be subject to further impact, the paleontologist shall evaluate the resource and determine whether it is "unique" under CEQA, Appendix G, Part V. If the resource is determined to not be unique, work may commence in the area.

4. If the resource is determined to be a unique paleontological resource, work shall remain halted, and the paleontologist shall consult with LA-RICS Authority staff regarding methods to ensure that no substantial adverse change would occur to the significance of the resource. Preservation in place, i.e., avoidance, is the preferred method of ensuring that there are no substantial adverse impacts to the resource and shall be required unless there are other equally effective methods. Other methods include ensuring that the fossils are recovered, prepared, identified, catalogued, and analyzed according to current professional standards.

5. Due to the small nature of some fossils, a fine mesh screen may be used at the discretion of the paleontologist at project-specific inspections to collect matrix samples for processing.

6. Provisions for preparation and identification of any fossils collected shall be made before donation to a suitable repository.

7. All recovered fossils shall be curated at a local accredited and permanent scientific institution according to Society of Vertebrate Paleontology standard guidelines standards. Work may commence upon completion of treatment, as approved by LA-RICS.

CRM CMR 6: Attaching Equipment to Historic Buildings

1. When running new exterior wiring to a historic building, utilize existing entry points when feasible. If a new entry point is required, consider placing the entry at the rear of the building or in an unobtrusive area on the side of the building.

2. When installing wireless nodes, antennas, microwave or satellite dishes, etc. on historic buildings, utilize existing mounting points when possible. For new mounts, the preferred option is the use of non-penetrating mounts.

3. Consider using existing building features to conceal equipment.

4. Equipment should be placed in a location that does not detract from the building's overall appearance; the best practice is to place roof mounted equipment where it will not be visible from accessible locations at grade. Ensure that there is adequate structural support for the new equipment and design, and install a system that minimizes the number of cutouts or holes in structural members and historic material.

5. The preferred alternative for new equipment installations on a historic building that will be visible is to paint the equipment and color match it to the surrounding building materials.

6. Color match any supports or brackets for new equipment to the existing materials.

7. Minimize visible exterior wiring; where unavoidable, the best practice is to color match the wiring to the original building material to reduce the visual impact.

8. Never anchor equipment directly into stone or brick; use mortar joints for anchoring the equipment.

9. Use rust resistant mounts to prevent staining of the building materials.

10. Use only reversible mounting techniques to avoid damage to building materials.

11. When installing cable or conduit underground at a historic property, the work should be undertaken in a manner that gives consideration to the stability of the historic building, including limiting any new excavations adjacent to historic foundations that could undermine the structural stability of the building, and avoiding landscape or other changes that could alter drainage patterns and cause water-related damage to the building.

12. Best alternative for new interior wiring is to utilize space in existing chases, closets or shafts.

13. Install equipment and systems so that it causes the least alteration possible to the building's floor plan, and the least damage to the historic building material.

14. Install the vertical runs of conduit and cables in closets, service rooms, and wall cavities when possible. Bear in mind, however, that the concept of complete invisibility, which necessitates hiding conduit and cables within wall and floor systems, may not always be appropriate for historic buildings because of the damage that often results. Every effort should be made to design a system that will require the least intrusion into the historic fabric of the building and that can be updated or altered without major intervention into the wall and floor systems.

The Contractor will be informed which locations include historic-age buildings well in advance of construction.

DEFINITIONS

Archaeological Monitor. A qualified archaeologist whose duty is to monitor construction activities to ensure all cultural CMRs will be implemented appropriately and completely.

Cross Trained Archaeological/Paleontological Monitor. A qualified archaeologist who has been trained to observe and record paleontological specimens and can demonstrate experience in this task whose duty is to monitor construction activities to ensure all CMRs will be implemented appropriately and completely.

Native American Monitor. A qualified Native American representing the local Tribal people trained in cultural resources identification whose duty is to monitor construction activities to ensure cultural CMRs will be implemented appropriately and completely.

Paleontological Monitor. A qualified paleontologist whose duty is to monitor construction activities to ensure the paleontological CMR will be implemented appropriately and completely.

Project Archaeologist. The archaeologist working for the LA-RICS Authority who coordinates and supervises cultural resource monitoring work, and serves as primary conduit for communication between Contractor, regulatory agencies, and applicant involving cultural resources for the project to ensure all CRM CMRs will be implemented appropriately and completely.

REFERENCES FOR CULTURAL | HISTORIC RESOURCES CMRS

The Secretary of the Interior's Standards for Rehabilitation: Website: http://www.nps.gov/history/hps/tps/tax/rhb/stand.htm. Accessed July 10, 2013.

National Park Service Preservation Briefs (for detailed guidance on preserving, rehabilitating and restoring historic buildings and specific types of historic building materials): Website: http://www.nps.gov/history/hps/tps/briefs/presbhom.htm. Accessed July 10, 2013.

INDEMNIFICATION AND INSURANCE PROVISIONS

I. INDEMNIFICATION

A. The Contractor shall indemnify, defend and hold harmless the LA-RICS Authority, its member agencies in the LA-RICS Authority, elected and appointed officers, employees, agents, volunteers and PSBN site lessors and licensors ("LA-RICS Authority Indemnitees") from and against any and all liability, including but not limited to demands, claims, actions, fees, costs and expenses (including attorney and expert witness fees), arising from and/or relating to this Agreement, except for such loss or damage arising from the sole negligence or willful misconduct of the LA-RICS Authority Indemnitees.

B. To the fullest extent permitted by California Civil Code Section 2782.8, the Consultant shall (1) immediately defend and (2) indemnify the LA-RICS Authority, its member agencies in the LA-RICS Authority, elected and appointed officers, employees, agents, volunteers and PSBN site lessors and licensors (Indemnified Party) from and against all liabilities, regardless of nature or type that arise out of, pertain to, or relate to the negligence, recklessness, or willful misconduct of the Consultant, or its employees, agents, or subcontractors. Liabilities subject to the duties to defend and indemnify include, without limitation, all claims, losses, damages, penalties, fines, and judgments; associated investigation and administrative expenses; defense costs, including but not limited to reasonable attorneys' fees; court costs; and costs of alternative dispute resolution. The Consultant's obligation to indemnify applies unless it is finally adjudicated that the liability was caused by the sole active negligence or sole willful misconduct of an indemnified party. If it is finally adjudicated that liability is caused by the comparative active negligence or willful misconduct of an indemnified party, then Consultant's indemnification obligation shall be reduced in proportion to the established comparative liability.

II. GENERAL PROVISIONS FOR ALL INSURANCE COVERAGE

Without limiting Contractor's indemnification of LA-RICS Authority, and in the performance of this Agreement and until all of its obligations pursuant to this Agreement have been met, Contractor shall provide and maintain at its own expense insurance coverage satisfying the requirements specified in paragraphs II and III of this Attachment. These minimum insurance coverage terms, types and limits (the "Required Insurance") also are in addition to and separate from any other contractual obligation imposed upon Contractor pursuant to this Agreement. The LA-RICS Authority in no way warrants that the Required Insurance is sufficient to protect the Contractor for liabilities which may arise from or relate to this Agreement.

A. Evidence of Coverage and Notice to LA-RICS Authority

- Certificate(s) of insurance coverage (Certificate) satisfactory to LA-RICS Authority, and a copy of an Additional Insured endorsement confirming LA-RICS Authority and its Agents (defined below) has been given Insured status under the Contractor's General Liability policy, shall be delivered to LA-RICS Authority at the address shown below and provided prior to commencing services under this Agreement.

- Renewal Certificates shall be provided to LA-RICS Authority not less than 10 days prior to Contractor's policy expiration dates. The LA-RICS Authority reserves the right to obtain complete, certified copies of any required Contractor and/or Sub-Contractor insurance policies at any time.

- Certificates shall identify all Required Insurance coverage types and limits specified herein, reference this Agreement by name or number, and be signed by an authorized representative of the insurer(s). The Insured party named on the Certificate shall match the name of the Contractor identified as the contracting party in this Agreement. Certificates shall provide the full name of each insurer providing coverage, its NAIC (National Association of Insurance Commissioners) identification number, its financial rating, the amounts of any policy deductibles or self-insured retentions exceeding fifty thousand ($50,000.00) dollars, and list any LA-RICS Authority required endorsement forms.

- Neither the LA-RICS Authority's failure to obtain, nor the LA-RICS Authority's receipt of, or failure to object to a non-complying insurance certificate or endorsement, or any other insurance documentation or information provided by the Contractor, its insurance broker(s) and/or insurer(s), shall be construed as a waiver of any of the Required Insurance provisions.

Certificates and copies of any required endorsements shall be emailed to the LA-RICS Authority, 2525 Corporate Place, Suite 100, Monterey Park, California 91754, ATTN: Executive Director, Scott Edson, E-mail: Scott.Edson@LA-RICS.org.

Contractor also shall promptly report to LA-RICS Authority any injury or property damage accident or incident, including any injury to a Contractor employee occurring on LA-RICS Authority property, and any loss, disappearance, destruction, misuse, or theft of LA-RICS Authority property, monies or securities entrusted to Contractor. Contractor also shall promptly notify LA-RICS Authority of any third party claim or suit filed against Contractor or any of its Sub-Contractors which arises from or relates to this Agreement, and could result in the filing of a claim or lawsuit against Contractor and/or LA-RICS Authority.

B. Additional Insured Status and Scope of Coverage

The LA-RICS Authority, its member agencies in the LA-RICS Authority, elected and appointed officers, employees, agents, volunteers and PSBN site lessors and licensors (collectively LA-RICS Authority and its Agents) shall be provided additional insured status under Contractor's General Liability policy with respect to liability arising out of Contractor's ongoing and completed operations performed on behalf of the LA-RICS Authority. LA-RICS Authority and its Agents additional insured status shall apply with respect to liability and defense of suits arising out of the Contractor's acts or omissions, whether such liability is attributable to the Contractor or to the LA-RICS Authority. The full policy limits and scope of protection also shall apply to the LA-RICS Authority and its Agents as an additional insured, even if they exceed the LA-RICS Authority's minimum Required Insurance specifications herein. Use of an automatic additional insured endorsement form is acceptable providing it satisfies the Required Insurance provisions herein.

C. Cancellation of or Changes in Insurance

Contractor shall provide LA-RICS Authority with, or Contractor's insurance policies shall contain a provision that LA-RICS Authority shall receive, written notice of cancellation or any change in Required Insurance, including insurer, limits of coverage, term of coverage or policy period. The written notice shall be provided to LA-RICS Authority at least ten (10) days in advance of cancellation for non-payment of premium and thirty (30) days in advance for any other cancellation or policy change. Failure to provide written notice of cancellation or any change in Required Insurance may constitute a material breach of the Agreement, in the sole discretion of the LA-RICS Authority, upon which the LA-RICS Authority may suspend or terminate this Agreement.

D. Failure to Maintain Insurance

Contractor's failure to maintain or to provide acceptable evidence that it maintains the Required Insurance shall constitute a material breach of the Agreement, upon which LA-RICS Authority immediately may withhold payments due to Contractor, and/or suspend or terminate this Agreement. LA-RICS Authority, at its sole discretion, may obtain damages from Contractor resulting from said breach. Alternatively, the LA-RICS Authority may purchase the Required Insurance, and without further notice to Contractor, deduct the premium cost from sums due to Contractor or pursue Contractor reimbursement.

E. Insurer Financial Ratings

Coverage shall be placed with insurers acceptable to the LA-RICS Authority with A.M. Best ratings of not less than A:VII unless otherwise approved by LA-RICS Authority.

F. Contractor's Insurance Shall Be Primary

Contractor's insurance policies, with respect to any claims related to this Agreement, shall be primary with respect to all other sources of coverage available to Contractor. Any LA-RICS Authority maintained insurance or self-insurance coverage shall be in excess of and not contribute to any Contractor coverage.

G. Waivers of Subrogation

To the fullest extent permitted by law, the Contractor hereby waives its rights and its insurer(s)' rights of recovery against LA-RICS Authority under all the Required Insurance for any loss arising from or relating to this Agreement. The Contractor shall require its insurers to execute any waiver of subrogation endorsements which may be necessary to effect such waiver.

H. Sub-Contractor Insurance Coverage Requirements

Contractor shall include all Sub-Contractors as insureds under Contractor's own policies, or shall provide LA-RICS Authority with each Sub-Contractor's separate evidence of insurance coverage. Contractor shall be responsible for verifying each Sub-Contractor complies with the Required Insurance provisions herein, and shall require that each Sub-Contractor name the LA-RICS Authority and Contractor as additional insureds on the Sub-Contractor's General Liability policy. Contractor shall obtain LA-RICS Authority's prior review and approval of any Sub-Contractor request for modification of the Required Insurance.

I. Deductibles and Self-Insured Retentions (SIRs)

Contractor's policies shall not obligate the LA-RICS Authority to pay any portion of any Contractor deductible or SIR. The LA-RICS Authority retains the right to require Contractor to reduce or eliminate policy deductibles and SIRs as respects the LA-RICS Authority, or to provide a bond guaranteeing Contractor's payment of all deductibles and SIRs, including all related claims investigation, administration and defense expenses. Such bond shall be executed by a corporate surety licensed to transact business in the State of California.

J. Claims Made Coverage

If any part of the Required Insurance is written on a claims made basis, any policy retroactive date shall precede the effective date of this Agreement. Contractor understands and agrees it shall maintain such coverage for a period of not less than three (3) years following Agreement expiration, termination or cancellation.

K. Application of Excess Liability Coverage

Contractors may use a combination of primary, and excess insurance policies which provide coverage as broad as the underlying primary policies, to satisfy the Required Insurance provisions.

L. Separation of Insureds

All liability policies shall provide cross-liability coverage as would be afforded by the standard ISO (Insurance Services Office, Inc.) separation of insureds provision with no insured versus insured exclusions or limitations.

M. Alternative Risk Financing Programs

The LA-RICS Authority reserves the right to review, and then approve, Contractor use of self-insurance, risk retention groups, risk purchasing groups, pooling arrangements and captive insurance to satisfy the Required Insurance provisions. The LA-RICS Authority and its Agents shall be designated as an Additional Covered Party under any approved program.

N. LA-RICS Authority Review and Approval of Insurance Requirements

The LA-RICS Authority reserves the right to review and adjust the Required Insurance provisions, conditioned upon LA-RICS Authority's determination of changes in risk exposures.

III. INSURANCE COVERAGE

A. Commercial General Liability insurance (providing scope of coverage equivalent to ISO policy form CG 00 01), naming LA-RICS Authority and its Agents as an additional insured, with limits of not less than:

General Aggregate:	$2 million
Products/Completed Operations Aggregate:	$1 million
Personal and Advertising Injury:	$1 million
Each Occurrence:	$1 million

B. Automobile Liability insurance (providing scope of coverage equivalent to ISO policy form CA 00 01) with limits of not less than $1 million for bodily injury and property damage, in combined or equivalent split limits, for each single accident. Insurance shall cover liability arising out of Contractor's use of autos pursuant to this Agreement, including owned, leased, hired, and/or non-owned autos, as each may be applicable.

C. Workers Compensation and Employers' Liability insurance or qualified self-insurance satisfying statutory requirements, which includes Employers' Liability coverage with limits of not less than $1 million per accident. If Contractor will provide leased employees, or, is an employee leasing or temporary staffing firm or a professional employer organization (PEO), coverage also shall include an Alternate Employer Endorsement (providing scope of coverage equivalent to ISO policy form WC 00 03 01 A) naming the LA-RICS Authority as the Alternate Employer, and the endorsement form shall be modified to provide that LA-RICS Authority will receive not less than thirty (30) days advance written notice of cancellation of this coverage provision. If applicable to Contractor's operations, coverage also shall be arranged to satisfy the requirements of any federal workers or workmen's compensation law or any federal occupational disease law.

D. Professional Liability/Errors and Omissions

Insurance covering Contractor's liability arising from or related to this Agreement, with limits of not less than $1 million per claim and $2 million aggregate. Further, Contractor understands and agrees it shall maintain such coverage for a period of not less than three (3) years following this Agreement's expiration, termination or cancellation.

SCHEDULE OF PRICES
(October 2018)

COLLOCATION SITE		
Deliverable		**Amount**
1.	Site Sketch	$ 22,300
2.	Zone Drawing	$ 6,500
3.	50% Construction Drawing	$ 18,400
4.	75% Construction Drawing	$ 16,700
5.	100% Construction Drawing (inclusive of all responses to jurisdictional review comments such that the Building Permit is ready for issuance)	$ 8,200
6.	Final As-built Drawings	$ 9,100
7.	Geotech	$ 4,000
	Total Cost Per Collocation Site:	**$ 85,200**
	Total Cost Per LA-RICS Site	**$ 67,400**

RAW LAND SITE		
Deliverable		**Amount**
1.	Site Sketch	$ 22,300
2.	Zone Drawing	$ 4,500
3.	50% Construction Drawing	$ 19,400
4.	75% Construction Drawing	$ 16,700
5.	100% Construction Drawing (inclusive of all responses to jurisdictional review comments such that the Building Permit is ready for issuance)	$ 8,200
6.	Final As-built Drawings	$ 9,100
7.	Geotech	$ 4,000
	Total Cost Per Raw Land Site:	**$ 84,200**

ROOFTOP SITE		
Deliverable		**Amount**
1.	Site Sketch	$ 16,000
2.	Zone Drawing	$ 8,500
3.	50% Construction Drawing	$ 17,000
4.	75% Construction Drawing	$ 19,600
5.	100% Construction Drawing (inclusive of all responses to jurisdictional review comments such that the Building Permit is ready for issuance)	$ 11,000
6.	Final As-built Drawings	$ 9,100
	Total Cost Per Rooftop Site:	**$ 81,200**

MAXIMUM NOT-TO-EXCEED CONTRACT AMOUNT		
	Deliverable	**Amount**
1.	Total Amount for all Site Type Deliverables	$ 2,400,400
2.	Total Amount for Related Services and Special Assignments	$ 100,000
3.	Total Amount Reimbursable for Permitting/Applications	$ 100,000
TOTAL MAXIMUM NOT-TO-EXCEED CONTRACT AMOUNT:		**$ 2,600,400**

HOURLY RATES		
	Position	**Rate**
1.	Program Manager	$ 225
2.	Lead Project Manager	$ 215
3.	Project Manager	$ 205
4.	Civil Engineer	$ 165
5.	Electrical Engineer	$ 165
6.	Mechanical Engineer	$ 165
7.	Structural Engineer	$ 135
8.	Architect	$ 135
9.	Landscape Architect	$ 165
10.	Supplemental Specialized Technical Consultant	$ 175

COST FOR CERTAIN WORK		
	Description	**Amount**
1.	1A Surveys*	$ 750
2.	Geotech*	$ 4,000
3.	Title Reports	$ 1,600
4.	Tower Mapping	$ 2,000 - $ 5,000
5.	Laser Scanning	$ 3,000
6.	Unmanned Aerial Vehicle (UAV) Drone Survey	$ 3,000
8.	Mechanical Engineering Services:	
	50% Construction Drawings	$ 1,750
	75% Construction Drawings	$ 3,500
	100% Construction Drawings	$ 2,150
9.	New Electrical Service	$ 5,500

COST FOR CERTAIN WORK		
Description		**Amount**
10.	Structural Calculations for existing antenna support structure at a Rooftop Site	$ 2,200

***Note:** The cost for this work shall be included in the base Deliverable prices set forth above (i.e. Collocation Site, Raw Land Site, and Rooftop Site). However, in the event this work is required in the future, the cost shall be acknowledged here in this Attachment 3 (Schedule of Prices).

SCHEDULE OF PRICES SUPPLEMENTAL

COLLOCATION SITE

PART ONE – SITE SKETCH DRAWINGS

1. **Research and obtain available as-built drawings** for existing streets and utilities adjacent to the project site. Obtain available copies of record maps. Obtain available design standards, reports, and planning information from the agencies having jurisdiction.
   Fixed Fee = $ 2,000

2. **Site Visit**
   Meet at site with LA RICS staff to investigate existing site conditions. Perform a **pre-construction site walk** with two persons of the consultant team. Includes identifying existing equipment onsite. Provide measurements of existing equipment inside of the existing equipment building. Will find existing tower plate and contact Tower manufacturer to determine if as built tower plans are available.

   Fixed Fee = $ 2,000

3. **Utility Locating**
   Consultant to provide subconsultant for **private underground utility locating services** to mark all utilities within the boundaries of the project. This work shall be performed prior to Field Topographic survey. Subconsultant's scope of work shall include or provide the following:

   Utility locator technician(s), equipment and supplies required to perform utility designation. Utility designation will be done using the following types of equipment: Electromagnetic locator – Used for designating conductive targets or those with tracer wire. Subconsultant shall mark all utilities they identify with paint markings indicating the type of facility found and the orientation of the facility. If the utility is in a dirt area, offset markings will be made to the nearest permanent surface. Subconsultant does not guarantee that all utilities will be identified on the project site. Subconsultant utility designating (locating) service is a best effort service with no guarantee of accuracy or completeness. The client is cautioned that unidentified underground utilities may still be present within the project site after our service has been completed. Subconsultant does not accept liability for any utility damage, or any type of damage, associated with our designating work product. Project Specific: Subconsultant will not be liable for the removal of paint, or other markings, placed during our utility designating activities.

   Fixed Fee = $1,600
   LA-RICS Sites Fee = $0.00

4. **Topographic, Utility and Boundary Retracement Survey**

   a. **Research – Survey and Mapping**
      Record data from maps obtained in our research effort will be used to establish horizontal control and City and County of Los Angeles bench information will be used for vertical control. Review current Title Report and Exception documents.

   b. **Survey Control**
      Horizontal survey datum will be NAD '83(CORS). Vertical Control will be the City Bench and County of Los Angeles datum. GPS will be utilized to establish the horizontal and vertical components of the project datum. Total stations with scanning capabilities and levels will be used for the design level topographic survey components.

c. **Topographic Survey**
Design level topographic surveys suitable for design will be performed within the project boundary. Supplemental Survey data for critical tie-in points, Existing Tower Antenna Heights, footing locations, curb and gutter, flowlines, edge of pavement, walks, surface visible utilities, irrigation boxes, backflows, fences, gates, drainage structures with inverts, signals, signs, driveways, H/C ramps, water mains, sewer manholes and inverts, natural gas, phone, CATV, electrical, light standards, concrete slabs, trees greater than 6" diameter, USA markings and other surface visible features . Existing ground supplemental survey data to be collected suitable for compiling in preparing a DTM and improvement plans. The Supplemental Survey Data will be collected at 25' intervals.

d. **Base Mapping**
The topographic survey data will be processed and plotted in AutoCAD at a scale of 1" = 20', with the project Boundary and easements of record. A digital terrain model will also be prepared in AutoCAD format.

Fixed Fee = $7,500
LA RICS Sites Fee = $0.00

5. Utility Plan

a. Compile field (survey) and record data into an AutoCAD file for project team to use as base map. CAD file shall include relevant site markers including but not limited to the information in Part 3 along with property lines from Title reports. *Reference sheet C-1 of sample plans.*
b. Provide plans showing the underground conduits from underground utility locating.
c. Indicate any as built water, sewer or storm drain plans in the project vicinity.

Fixed Fee = $2,200
LA RICS Sites Fee = $0.00

6. Site Sketch Drawings

Prepare a layout site plan in AutoCAD format for preliminary approval to move forward with Site Sketch. Prepare a site plan which includes coordinating the setbacks and dimensions of cell towers, equipment shelter, concrete slab, diesel fuel tanks, backup generator and components of the proposed site provided by the client. The site plan will be submitted to the client for review prior to the zoning submittal to LA County. *Reference sheet A-1 and A-2 of the sample plans.*

Fixed Fee = $4,500

7. Plan Processing with LA-RICS – includes preparing and processing of plan submittals.
Fixed Fee = $1,000

8. Program Management/Consultant Meetings – Assist LA RICS with overall management of projects and project team throughout pre-design, design, execution, construction and project closeout. Responsible for delivery of the services in accordance with the negotiated contract. Plan checker to work with at the County of Los Angeles to get preferential treatment and shorter review times.

- Coordinate with team to ensure timely and accurate deliverables to LA RICS
- Report any project fee or schedule risks to LA RICS from consultant team when identified.
- Liaison between consulting team and LA RICS re: identification, analysis and issue resolution.
- Prepare periodic project update document and submit to LA RICS
- Initiate and participate on team calls/in team meetings
- Write agendas, take and publish meeting minutes
- Monitor project schedules
  - Review project scope and timeline and make recommendations to keep project on schedule
  - Work with consultant to revise/update/modify schedule
- Participate periodically with team on call/in meetings
- Set up meetings, create and distribute agendas, take and publish meeting minutes

- Permit coordination
- Construction Phase
  - Monitor individual project progress and report
  - Set up meetings, create and distribute agendas, take and publish meeting minutes (optional)
  - Coordinate as-built phase, collect information throughout construction and at end of construction
  - Assist with project closeout

Fixed Fee = $1,500

SUBTOTAL FEE SITE SKETCH DRAWINGS = $22,300
LA-RICS Sites Fee = $11,000

1. **(Optional) Laser Scanning**
   Will provide static HDR scanning of all four sides of existing tower to determine existing structural shape of tower for elevations views. Static HDR scanning will also locate existing antennae locations as well as sizes for wind load determinations.

   Optional Fee = $3,000

2. **(Optional) Unmanned Aerial Vehicle (UAV) Drone Survey**
   Should instances occur where the Static HDR scanning cannot determine needed information then we will provide Unmanned Aerial Vehicle Surveys (UAV).

   Optional Fee = $3,000

3. Consultant to retain the services of a Title Company to provide a **Preliminary Title Report** with backup documents.

   Fixed Fee = $1,600

PART TWO - ZONING LEVEL DRAWINGS

1. **Zoning Level Drawings**
   Address LA RICS site plan comments to finalize the site plan, which includes coordinating the setbacks and dimensions of cell towers, equipment shelter, concrete slab, diesel fuel tanks, backup generator and components of the proposed site provided by the client. The site plan will be submitted to the client for review prior to the zoning submittal to LA County. *Reference sheet A-1 and A-2 of the sample plans.* Exterior Elevations as noted per sheet A-3 and sheet A-3.1 will be provided by the tower manufacturer as an ACAD file.

   Fixed Fee = $3,000
   LA-RICS Sites Fee = $2,000

2. **Structural Integrity Report – Structural calculations to check existing monopole to reuse. Check of existing truss tower is additional fee depending on size and height.** The structural analysis will determine if the existing structural members of the tower will be adequate to support the new wind and seismic loading of the new equipment. The structural analysis may determine retrofitting or a new tower design is recommended.

   Fixed Fee = $1,000
   LA-RICS Sites Fee = $500.00

3. **Plan Processing with LA-RICS –** includes preparing and processing of plan submittals.

   Fixed Fee = $1,000

4. **Program Management/Consultant Meetings** Assist – LA RICS with overall management of projects.

   Fixed Fee = $1,500

SUBTOTAL FEE ZONING LEVEL DRAWINGS = $6,500
LA-RICS Sites Fee = $5,000

PART THREE – CONSTRUCTION DRAWINGS – 50% CD DRAWINGS

1. **General Notes and Specifications**
   Provide cover sheet and site specifications based on ACAD plans provided by client. *Reference sheet T-1, GN-1, THROUGH GN-7 of the plans*. Separate bid specifications booklet is not included in this Scope of Services.

   Fixed Fee = $500

2. **Structural Engineering Services**
   Progress design and detailing of the following structural elements:

   a. Fencing details
   b. Outdoor equipment pad
   c. Outdoor electrical equipment H-frame
   d. GPS post detail
   e. Generator pad

   Fixed Fee = $2,200

3. **Structural Engineering Services for existing monopole**
   Progress design and detailing of the existing monopole

   Fixed Fee = $2,000
   LA RICS Sites Fee = $1,000.00

4. **Electrical Engineering Services** will include the following design sheets:
   a. Electrical General Notes
   b. Utility Routing Plan
   c. Exterior Grounding Plan
   d. Equipment layouts
   e. Electrical Floor plan of control room
   f. Electrical Details
   g. Single Line Diagram
   h. Grounding General Notes
   i. Grounding Detail
   j. Equipment Grounding Details
   k. Portable generator connection with MTS design (lug box or Appleton plug)
   l. Backup diesel fuel tank and generator sizing
   m. Evaluate whether an AQMD permit will be required will be provided

   Fixed Fee = $8,000

5. **Conceptual Precise Grading Plan**
   Provide plans showing the detailed grading and surface drainage of the cell tower area and equipment pads. Location of equipment shall be per LA County approved site plan provided in Part One. Provide 50% CD drawings in PDF.

   Fixed Fee = $3,200

6. **Plan Processing with LA-RICS –** includes preparing and processing of plan submittals.

   Fixed Fee = $1,000

7. **Program Management/Consultant Meetings –** Assist LA-RICS with overall management of projects.

   Fixed Fee = $1,500

SUBTOTAL FEE 50% DRAWINGS = 18,400
LA-RICS Sites Fee = $17,400

1. **(Optional) Mechanical Engineering Services** will include the following design sheets:
   a. Analyze existing AC system with built in redundancies for the control room. Specify Split system air conditioning unit (indoor unit) with remotely located air-cooled condenser (outdoor unit), field installed refrigeration piping and control wiring between indoor and outdoor units.

   Fixed Fee = $1,750

2. **(Optional) New Electrical Service**
   a. Coordinate with Local Utility Company for available service point of connection.
   b. (1) Site visit with utility company service planner.
   c. Submit application form with required information, estimated load calculation, preliminary single line diagram and floor plan.
   d. Obtain preliminary utility plan from utility company.
   e. Incorporate preliminary utility plan into construction document.

   Fixed Fee = $5,500

<u>PART FOUR – CONSTRUCTION DRAWINGS –75% CD DRAWINGS</u>

1. **Structural Engineering Services**
   Drawings, calculations, detailing for Bldg. Dept. Submittal of the following equipment.
   a. Fencing details
   b. Outdoor equipment cabinets (pad and anchorage)
   c. Outdoor electrical equipment (H-frame and attachment)
   d. GPS post detail
   e. Bollard detail
   f. Generator with belly tank (pad and anchorage)
   g. Existing monopole tower calculations.

   Fee= $2,600

2. **Electrical Engineering Services** finalize design for 75% CD submittal package.
   a. Electrical General Notes
   b. Utility Routing Plan
   c. Exterior Grounding Plan
   d. Enlarged Utility Routing Plan
   e. Equipment layouts
   f. Electrical Floor plan of control room
   g. Electrical Details
   h. Single Line Diagram
   i. Panel Schedules
   j. Utility Power Design (based on Utility Plans provided)
   k. Grounding General Notes
   l. Grounding Detail
   m. Equipment Grounding Details

n. Portable generator connection with MTS design (lug box or Appleton plug)
o. Backup diesel fuel tank and generator design

Fee = $6,000

3. **Precise Grading Plan**
Finalize plans showing the detailed grading and surface drainage of the cell tower area. Prepare an Erosion Control Plan detailing best management practices.

Fee = $2,600

4. **Plan Check Submittal –** includes preparing and processing of plans as noted above

Fee = $3,000

5. **Plan Processing with LA-RICS –** includes preparing and processing of plan submittals.

Fixed Fee = $1,000

6. **Program Management/Consultant Meetings –** Assist LA-RICS with overall management of projects.

Fixed Fee = $1,500

SUBTOTAL FEE 75% DRAWINGS = $16,700

1. **(Optional) Mechanical Engineering Services** finalize design for 75% CD submittal package:
a. Mechanical General Notes
b. Mechanical floor plan of cell site
c. Specification of HVAC units.
d. Mechanical details

Fee = $3,500

PART FIVE – CONSTRUCTION DRAWINGS – 100% CD DRAWINGS

1. **Structural Engineering Services**
Respond to plancheck comments. Issue Permit Set.

Fee= $1,200

2. **Electrical Engineering Services** finalize design 100% CD submittal package.

Fee = $2,000

3. **Precise Grading Plan**
Finalize plans showing the detailed grading and surface drainage of the cell tower area. Prepare an Erosion Control Plan detailing best management practices.

Fee = $1,000

4. **Plan Check Submittal -** includes preparing and processing of plans as noted above

Fee = $1,500

5. **Plan Processing with LA-RICS –** includes preparing and processing of plan submittals.

Fixed Fee = $1,000

6. **Program Management/Consultant Meetings –** Assist LA-RICS with overall management of projects.

   Fixed Fee = $1,500

SUBTOTAL FEE 100% CD DRAWINGS = $8,200

1. **(Optional) Mechanical Engineering Services** finalize design 100% CD submittal package:
   a. Mechanical General Notes
   b. Mechanical floor plan of cell site
   c. Specification of HVAC units.
   d. Mechanical details

   Fee = $2,150

PART SIX – CONSTRUCTION ADMINISTRATION

1. **Construction Administration (Billed on an as needed basis)**
   Respond to RFIs and coordination of site specific requirements. Submittal Review and punch walk.

   Fee = $6,600

2. **Plan Processing with LA-RICS –** includes preparing and processing of plan submittals.

   Fixed Fee = $1,000

3. **Program Management/Consultant Meetings –** Assist LA RICS with overall management of projects.

   Fixed Fee = $1,500

SUBTOTAL FEE CONSTRUCTION ADMINISTRATION = $9,100

PART SEVEN – Geotechnical Reports

1. **Geotechnical Reports**
   a. Provide one subsurface exploration within 50 miles distance of Alhambra. For other geotechnical services refer to Cost data AESCO proposal No. P5832.

   Fixed Fee = $4,000

RAW LAND SITE

PART ONE – SITE SKETCH

1. **Research and obtain available as-built drawings** for existing streets and utilities adjacent to the project site. Obtain available copies of record maps. Obtain available design standards, reports, and planning information from the agencies having jurisdiction.

   Fixed Fee = $ 2,000

2. **Site Visit**

   Meet at site with LA RICS staff to investigate existing site conditions. Perform a **pre-construction site walk** with two persons of the consultant team. Includes identifying existing equipment onsite. Provide measurements of existing equipment inside of the existing equipment building. Will find existing tower plate and contact Tower manufacturer to determine if as built tower plans are available.

   Fixed Fee = $ 2,000

3. **Utility Locating**
   Consultant to provide sub consultant for **private underground utility locating services** to mark all utilities within the boundaries of the project. This work shall be performed prior to Field Topographic survey. Subconsultant's scope of work shall include or provide the following:

   Utility locator technician(s), equipment and supplies required to perform utility designation. Utility designation will be done using the following types of equipment: Electromagnetic locator – Used for designating conductive targets or those with tracer wire. Subconsultant shall mark all utilities they identify with paint markings indicating the type of facility found and the orientation of the facility. If the utility is in a dirt area, offset markings will be made to the nearest permanent surface. Subconsultant does not guarantee that all utilities will be identified on the project site. Subconsultant utility designating (locating) service is a best effort service with no guarantee of accuracy or completeness. The client is cautioned that unidentified underground utilities may still be present within the project site after our service has been completed. Subconsultant does not accept liability for any utility damage, or any type of damage, associated with our designating work product. Project Specific: Subconsultant will not be liable for the removal of paint, or other markings, placed during our utility designating activities.

   Fixed Fee = $1,600

4. **Topographic, Utility and Boundary Retracement Survey**

   a. **Research – Survey and Mapping**
      Record data from maps obtained in our research effort will be used to establish horizontal control and City and County of Los Angeles bench information will be used for vertical control. Review current Title Report and Exception documents.

   b. **Survey Control**
      Horizontal survey datum will be NAD '83(CORS). Vertical Control will be the City Bench and County of Los Angeles datum. GPS will be utilized to establish the horizontal and vertical components of the project datum. Total stations with scanning capabilities and levels will be used for the design level topographic survey components.

   c. **Topographic Survey**
      Design level topographic surveys suitable for design will be performed within the project boundary. Supplemental Survey data for critical tie-in points, Existing Tower Antenna Heights, footing locations, curb and gutter, flowlines, edge of pavement, walks, surface visible utilities,

irrigation boxes, backflows, fences, gates, drainage structures with inverts, signals, signs, driveways, H/C ramps, water mains, sewer manholes and inverts, natural gas, phone, CATV, electrical, light standards, concrete slabs, trees greater than 6" diameter, USA markings and other surface visible features . Existing ground supplemental survey data to be collected suitable for compiling in preparing a DTM and improvement plans. The Supplemental Survey Data will be collected at 25' intervals.

d. **Base Mapping**
The topographic survey data will be processed and plotted in AutoCAD at a scale of 1" = 20', with the project Boundary and easements of record. A digital terrain model will also be prepared in AutoCAD format.

Fixed Fee = $7,500

5. Utility Plan

a. Compile field (survey) and record data into an AutoCAD file for project team to use as base map. CAD file shall include relevant site markers including but not limited to the information in Part 3 along with property lines from Title reports. *Reference sheet C-1 of sample plans.*
b. Provide plans showing the underground conduits from underground utility locating.
c. Indicate any as built water, sewer or storm drain plans in the project vicinity.

Fixed Fee = $2,200

6. Site Sketch Drawings
Prepare a layout site plan in AutoCAD format for preliminary approval to move forward with Site Sketch. Prepare a site plan which includes coordinating the setbacks and dimensions of cell towers, equipment shelter, concrete slab, diesel fuel tanks, backup generator and components of the proposed site provided by the client. The site plan will be submitted to the client for review prior to the zoning submittal to LA County. *Reference sheet A-1 and A-2 of the sample plans.*

Fixed Fee = $4,500

7. Plan Processing with LA-RICS – includes preparing and processing of plan submittals.

Fixed Fee = $1,000

8. Program Management/Consultant Meetings – Assist LA RICS with overall management of projects and project team throughout pre-design, design, execution, construction and project closeout. Responsible for delivery of the services in accordance with the negotiated contract. Plan checker to work with at the County of Los Angeles to get preferential treatment and shorter review times.

- Coordinate with team to ensure timely and accurate deliverables to LA RICS
- Report any project fee or schedule risks to LA RICS from consultant team when identified.
- Liaison between consulting team and LA RICS re: identification, analysis and issue resolution.
- Prepare periodic project update document and submit to LA RICS
- Initiate and participate on team calls/in team meetings
- Write agendas, take and publish meeting minutes
- Monitor project schedules
  - Review project scope and timeline and make recommendations to keep project on schedule
  - Work with consultant to revise/update/modify schedule
- Participate periodically with team on call/in meetings
- Set up meetings, create and distribute agendas, take and publish meeting minutes
- Permit coordination
- Construction Phase
  - Monitor individual project progress and report
  - Set up meetings, create and distribute agendas, take and publish meeting minutes (optional)

- Coordinate as-built phase, collect information throughout construction and at end of construction
- Assist with project closeout

Fixed Fee = $1,500

SUBTOTAL FEE SITE SKETCH DRAWINGS = $22,300

1. (Optional) Title Report
Consultant to retain the services of a Title Company to provide a **Preliminary Title Report** with backup documents.

Fixed Fee = $1,600

PART TWO – ZONING LEVEL DRAWING

1. Zoning Level Drawings
Address LA RICS site plan comments to finalize the site plan. Which includes coordinating the setbacks and dimensions of cell towers, equipment shelter, concrete slab, diesel fuel tanks, backup generator and components of the proposed site provided by the client. The site plan will be submitted to the client for review prior to the zoning submittal to LA County. *Reference sheet A-1 and A-2 of the sample plans.* Exterior Elevations as noted per sheet A-3 and sheet A-3.1 Elevations of new monopole tower with Elevation will be based on utilizing existing 70 foot monopole provided by LA-RICS and preliminary layout of appurtenances.

Fixed Fee = $2,000

2. Plan Processing with LA-RICS – includes preparing and processing of plan submittals.

Fixed Fee = $1,000

3. Program Management/Consultant Meetings – Assist LA RICS with overall management of projects.

Fixed Fee = $1,500

SUBTOTAL FEE ZONING LEVEL DRAWINGS = $4,500

PART THREE – CONSTRUCTION DRAWINGS – 50% CD DRAWINGS

1. General Notes and Specifications
Provide cover sheet and site specifications based on ACAD plans provided by client. *Reference sheet T-1, GN-1, THROUGH GN-7 of the plans*. Separate bid specifications booklet is not included in this Scope of Services.

Fixed Fee = $ 500

2. Structural Engineering Services
Progress design and detailing of the following structural elements:

a. Fencing details
b. Outdoor equipment pad
c. Outdoor electrical equipment H-frame
d. GPS post detail
e. Generator pad

Fixed Fee = $2,200

3. **Structural Engineering Services for existing monopole**
Progress design and detailing of the existing 70 foot monopole

Fixed Fee = $3,000

4. **Electrical Engineering Services** will include the following design sheets:

a. Electrical General Notes
b. Utility Routing Plan
c. Exterior Grounding Plan
d. Equipment layouts
e. Electrical Floor plan of control room
f. Electrical Details
g. Single Line Diagram
h. Grounding General Notes
i. Grounding Detail
j. Equipment Grounding Details
k. Portable generator connection with MTS design (lug box or Appleton plug)
l. Backup diesel fuel tank and generator sizing
m. Evaluate whether an AQMD permit will be required will be provided

Fixed Fee = $8,000

5. **Conceptual Precise Grading Plan**
Provide plans showing the detailed grading and surface drainage of the cell tower area and equipment pads. Location of equipment shall be per LA County approved site plan provided in Part One. Provide 50% CD drawings in PDF.

Fixed Fee = $3,200

6. **Plan Processing with LA-RICS –** includes preparing and processing of plan submittals.

Fixed Fee = $1,000

7. **Program Management/Consultant Meetings –** Assist LA RICS with overall management of projects.

Fixed Fee = $1,500

SUBTOTAL FEE 50% DRAWINGS = $19,400

1. **(Optional) Mechanical Engineering Services** will include the following design sheets:
Analyze existing AC system with built in redundancies for the control room. Specify Split system air conditioning unit (indoor unit) with remotely located air-cooled condenser (outdoor unit), field installed refrigeration piping and control wiring between indoor and outdoor units.

Fixed Fee = $1,750

2. **(Optional) New Electrical Service**

a. Coordinate with Local Utility Company for available service point of connection.
b. (1) Site visit with utility company service planner.
c. Submit application form with required information, estimated load calculation, preliminary single line diagram and floor plan.
d. Obtain preliminary utility plan from utility company.
e. Incorporate preliminary utility plan into construction document.

Fixed Fee = $5,500

PART FOUR – CONSTRUCTION DRAWINGS – 75% CD DRAWINGS

1. **Structural Engineering Services**
   Drawings, calculations, detailing for Bldg. Dept. Submittal of the following equipment.

   a. Fencing details
   b. Outdoor equipment cabinets (pad and anchorage)
   c. Outdoor electrical equipment (H-frame and attachment)
   d. GPS post detail
   e. Bollard detail
   f. Generator with belly tank (pad and anchorage)
   g. Existing monopole tower calculations.

   Fee = $2,600

2. **Electrical Engineering Services** finalize design for 75% CD submittal package.

   a. Electrical General Notes
   b. Utility Routing Plan
   c. Exterior Grounding Plan
   d. Enlarged Utility Routing Plan
   e. Equipment layouts
   f. Electrical Floor plan of control room
   g. Electrical Details
   h. Single Line Diagram
   i. Panel Schedules
   j. Utility Power Design (based on Utility Plans provided)
   k. Grounding General Notes
   l. Grounding Detail
   m. Equipment Grounding Details
   n. Portable generator connection with MTS design (lug box or Appleton plug)
   o. Backup diesel fuel tank and generator design

   Fee = $6,000

3. **Precise Grading Plan**
   Finalize plans showing the detailed grading and surface drainage of the cell tower area. Prepare an Erosion Control Plan detailing best management practices.

   Fee = $2,600

4. **Plan Check Submittal –** includes preparing and processing of plans as noted above
   Fee = $3,000

5. **Plan Processing with LA-RICS –** includes preparing and processing of plan submittals.
   Fixed Fee = $1,000

6. **Program Management/Consultant Meetings –** Assist LA RICS with overall management of projects.

   Fixed Fee = $1,500

SUBTOTAL FEE 75% DRAWINGS = $16,700

1. **(Optional) Mechanical Engineering Services** finalize design for 75% CD submittal package:
   a. Mechanical General Notes
   b. Mechanical floor plan of cell site
   c. Specification of HVAC units.

d. Mechanical details

Fee = $3,500

PART FIVE - CONSTRUCTION DRAWINGS – 100% CD DRAWINGS

1. **Structural Engineering Services**
Respond to plancheck comments. Issue Permit Set.

Fee= $1,200

2. **Electrical Engineering Services** finalize design 100% CD submittal package.

Fee = $2,000

3. **Precise Grading Plan**
Finalize plans showing the detailed grading and surface drainage of the cell tower area. Prepare an Erosion Control Plan detailing best management practices.

Fee = $1,000

4. **Plan Check Submittal -** includes preparing and processing of plans as noted above

Fee = $1,500

5. **Plan Processing with LA-RICS –** includes preparing and processing of plan submittals.

Fixed Fee = $1,000

6. **Program Management/Consultant Meetings –** Assist LA RICS with overall management of projects.

Fixed Fee = $1,500

SUBTOTAL FEE 100% CD DRAWINGS = $8,200

1. **(Optional) Mechanical Engineering Services** finalize design 100% CD submittal package:

a. Mechanical General Notes
b. Mechanical floor plan of cell site
c. Specification of HVAC units.
d. Mechanical details

Fee = $2,150

PART SIX – CONSTRUCTION ADMINISTRATION

1. **Construction Administration (Billed on an as needed basis)**
Respond to RFIs and coordination of site specific requirements. Submittal Review and punch walk.

Fee = $6,600

2. **Plan Processing with LA-RICS –** includes preparing and processing of plan submittals.

Fixed Fee = $1,000

3. **Program Management/Consultant Meetings –** Assist LA RICS with overall management of projects.

   Fixed Fee = $1,500

SUBTOTAL FEE CONSTRUCTION ADMINISTRATION = $9,100

PART SEVEN – Geotechnical Reports

1. **Geotechnical Reports**

   a. Provide one subsurface exploration within 50 miles distance of Alhambra. For other geotechnical services refer to Cost data AESCO proposal No. P5832.

   Fixed Fee = $4,000

ROOFTOP SITE

PART ONE – SITE SKETCH DRAWINGS

1. **Research and obtain available as-built drawings** for existing streets and utilities adjacent to the project site. Obtain available copies of record maps. Obtain available design standards, reports, and planning information from the agencies having jurisdiction. Review existing structural drawings for any existing building, shelters, poles, towers, etc.

   Fixed Fee = $ 2,000

2. **Site Visit**
   Meet at site with LA RICS staff to investigate existing site conditions. Perform a **pre-construction site walk** with one person of the consultant team. Includes identifying existing equipment onsite. Provide measurements of existing equipment inside of the existing equipment building. Will find existing tower plate and contact Tower manufacturer to determine if as built tower plans are available.

   Fixed Fee = $ 1,000

3. **Topographic, Utility and Boundary Retracement Survey**

   a. **Research – Survey and Mapping**
   Record data from maps obtained in our research effort will be used to establish horizontal control and City and County of Los Angeles bench information will be used for vertical control. Review current Title Report and Exception documents.

   b. **Survey Control**
   Horizontal survey datum will be NAD '83(CORS). Vertical Control will be the City Bench and County of Los Angeles datum. GPS will be utilized to establish the horizontal and vertical components of the project datum. Total stations with scanning capabilities and levels will be used for the design level topographic survey components.

   c. **Topographic Survey**
   Design level topographic surveys suitable for design will be performed within the project boundary. Supplemental Survey data for critical tie-in points, Existing Tower Antenna Heights, footing locations, curb and gutter, flowlines, edge of pavement, walks, surface visible utilities, irrigation boxes, backflows, fences, gates, drainage structures with inverts, signals, signs, driveways, H/C ramps, water mains, sewer manholes and inverts, natural gas, phone, CATV, electrical, light standards, concrete slabs, trees greater than 6" diameter, USA markings and other surface visible features . Existing ground supplemental survey data to be collected suitable for compiling in preparing a DTM and improvement plans. The Supplemental Survey Data will be collected at 25' intervals.

   d. **Base Mapping**
   The topographic survey data will be processed and plotted in AutoCAD at a scale of 1" = 20', with the project Boundary and easements of record. A digital terrain model will also be prepared in AutoCAD format.

   Fixed Fee = $6,000

4. **Site Sketch Drawings**
   Prepare a layout site plan in AutoCAD format for preliminary approval to move forward with Site Sketch. Prepare a site plan which includes coordinating the setbacks and dimensions of cell towers, equipment shelter, concrete slab, diesel fuel tanks, backup generator and components of the proposed site provided by the client. The site plan will be submitted to the client for review prior to the zoning submittal to LA County. *Reference sheet A-1 and A-2 of the sample plans.*

Fixed Fee = $4,500

5. **Plan Processing with LA-RICS –** includes preparing and processing of plan submittals.

   Fixed Fee = $1,000

6. **Program Management/Consultant Meetings –** Assist LA RICS with overall management of projects and project team throughout pre-design, design, execution, construction and project closeout. Responsible for delivery of the services in accordance with the negotiated contract. Plan checker to work with at the County of Los Angeles to get preferential treatment and shorter review times.
   - Coordinate with team to ensure timely and accurate deliverables to LA RICS
   - Report any project fee or schedule risks to LA RICS from consultant team when identified.
   - Liaison between consulting team and LA RICS re: identification, analysis and issue resolution.
   - Prepare periodic project update document and submit to LA RICS
   - Initiate and participate on team calls/in team meetings
   - Write agendas, take and publish meeting minutes
   - Monitor project schedules
     - Review project scope and timeline and make recommendations to keep project on schedule
     - Work with consultant to revise/update/modify schedule
   - Participate periodically with team on call/in meetings
   - Set up meetings, create and distribute agendas, take and publish meeting minutes
   - Permit coordination
   - Construction Phase
     - Monitor individual project progress and report
     - Set up meetings, create and distribute agendas, take and publish meeting minutes (optional)
     - Coordinate as-built phase, collect information throughout construction and at end of construction
     - Assist with project closeout

   Fixed Fee = $1,500

SUBTOTAL FEE SITE SKETCH DRAWINGS = $16,000

<u>PART TWO – ZONING LEVEL DRAWINGS</u>

1. **Zoning Level Drawings**
   Address LA RICS site plan comments to finalize the site plan, which includes coordinating the setbacks and dimensions of cell towers, equipment shelter, concrete slab, diesel fuel tanks, backup generator and components of the proposed site provided by the client. The site plan will be submitted to the client for review prior to the zoning submittal to LA County. *Reference sheet A-1 and A-2 of the sample plans.* Exterior Elevations as noted per sheet A-3 and sheet A-3.1 will include Elevations of new monopole tower with preliminary layout of appurtenances. Elevation will be drawn from manufacturer CAD file or from scratch per fee schedule below. Alternate, draw elevations of existing monopole or tower from manufacturer's or mapping information.

   Fixed Fee = $4,000

2. **Structural Integrity Report –** Structural calculations to check existing roof structure to support weight of new equipment, pads, monopole, etc.

   Fixed Fee = $2000

3. **Plan Processing with LA-RICS –** includes preparing and processing of plan submittals.

   Fixed Fee = $1,000

4. **Program Management/Consultant Meetings –** Assist LA-RICS with overall management of projects.

   Fixed Fee = $1,500

SUBTOTAL FEE ZONING LEVEL DRAWINGS = $8,500

1. **Optional: Structural calculations to check existing monopole to reuse. Check of existing truss tower is additional fee depending on size and height.** The structural analysis will determine if the existing structural members of the tower will be adequate to support the new wind and seismic loading of the new equipment. The structural analysis may determine retrofitting or a new tower design is recommended.

   Fixed Fee = $2,200

PART THREE – CONSTRUCTION DRAWINGS –50% CD DRAWINGS

1. **General Notes and Specifications**
   Provide cover sheet and site specifications based on ACAD plans provided by client. *Reference sheet T-1, GN-1, THROUGH GN-7 of the plans*. Separate bid specifications booklet is not included in this Scope of Services.

   Fixed Fee = $500

2. **Structural Engineering Services**
   Progress design and detailing of the following structural elements:

   a. Outdoor equipment pad on roof
   b. Outdoor electrical equipment H-frame
   c. GPS post detail
   d. Generator pad on grade or support on roof
   e. Structural support for new rooftop monopole
   f. Simple strengthening of existing roof framing (Complex strengthening may be extra).

   Fixed Fee = $4,500

   Confirmation of structural analysis of existing monopole or trussed tower, if being reused.

   Fixed Fee = $1,500

3. **Electrical Engineering Services** will include the following design sheets:
   a. Electrical General Notes
   b. Utility Routing Plan
   c. Exterior Grounding Plan
   d. Equipment layouts
   e. Electrical Floor plan of control room
   f. Electrical Details
   g. Single Line Diagram
   h. Grounding General Notes
   i. Grounding Detail
   j. Equipment Grounding Details
   k. Portable generator connection with MTS design (lug box or Appleton plug)
   l. Backup diesel fuel tank and generator sizing
   m. Evaluate whether an AQMD permit will be required will be provided

   Fixed Fee = $8,000

5. **Plan Processing with LA-RICS –** includes preparing and processing of plan submittals.

   Fixed Fee = $1,000

6. **Program Management/Consultant Meetings –** Assist LA RICS with overall management of projects.

   Fixed Fee = $1,500

SUBTOTAL FEE 50% DRAWINGS = $17,000

1. **(Optional) Mechanical Engineering Services** will include the following design sheets:
   Analyze existing AC system with built in redundancies for the control room. Specify Split system air conditioning unit (indoor unit) with remotely located air-cooled condenser (outdoor unit), field installed refrigeration piping and control wiring between indoor and outdoor units.

   Fixed Fee = $1,750

2. **(Optional) New Electrical Service**
   a. Coordinate with Local Utility Company for available service point of connection.
   b. (1) Site visit with utility company service planner.
   c. Submit application form with required information, estimated load calculation, preliminary single line diagram and floor plan.
   d. Obtain preliminary utility plan from utility company.
   e. Incorporate preliminary utility plan into construction document.

   Fixed Fee = $5,500

<u>PART FOUR – CONSTRUCTION DRAWINGS –75% CD DRAWINGS</u>

1. **Structural Engineering Services**
   Drawings, calculations, detailing for Bldg. Dept. Submittal of the following equipment.

   a. Outdoor equipment cabinets (pad and anchorage)
   b. Outdoor electrical equipment (H-frame and attachment)
   c. GPS post detail
   d. Generator with belly tank (support frame and anchorage)
   e. Structural support for new rooftop monopole
   f. Simple strengthening of existing roof framing (Complex strengthening may be extra).

   Review of the new communication tower calculations and shop drawings for new monopole tower.

   Fee = $5,500

2. **Electrical Engineering Services** finalize design for 75% CD submittal package.
   a. Electrical General Notes
   b. Utility Routing Plan
   c. Exterior Grounding Plan
   d. Enlarged Utility Routing Plan
   e. Equipment layouts
   f. Electrical Floor plan of control room
   g. Electrical Details
   h. Single Line Diagram
   i. Panel Schedules
   j. Utility Power Design (based on Utility Plans provided)
   k. Grounding General Notes
   l. Grounding Detail
   m. Equipment Grounding Details

n. Portable generator connection with MTS design (lug box or Appleton plug)
o. Backup diesel fuel tank and generator design

Fee = $6,000

3. **Rooftop Plan and Details**
Coordinate rooftop plans and detailing required for installation of equipment on roof

Fee = $2,600

4. **Plan Processing –** includes preparing and processing of plan submittals as noted above

Fee = $3,000

5. **Plan Processing with LA-RICS –** includes preparing and processing of plan submittals.

Fixed Fee = $1,000

6. **Program Management/Consultant Meetings –** Assist LA RICS with overall management of projects.

Fixed Fee = $1,500

SUBTOTAL FEE 75% DRAWINGS = $19,600

1. **(Optional) Mechanical Engineering Services** finalize design for 75% CD submittal package:
a. Mechanical General Notes
b. Mechanical floor plan of cell site
c. Specification of HVAC units.
d. Mechanical details

Fee = $3,500

PART FIVE – CONSTRUCTION DRAWINGS – 100% CD DRAWINGS

1. **Structural Engineering Services**
Respond to plan check comments. Issue Permit set

Fee = $4,000

2. **Electrical Engineering Services** finalize design 100% CD submittal package.

Fee = $2,000

3. **Final Rooftop Plan and Details**
Coordinate rooftop plans and detailing required for installation of equipment on roof

Fee = $1,000

4. **Plan Check Submittal –** includes preparing and processing of plans as noted above

Fee = $1,500

5. **Plan Processing with LA-RICS –** includes preparing and processing of plan submittals.

Fixed Fee = $1,000

6. **Program Management/Consultant Meetings –** Assist LA RICS with overall management of projects.

   Fixed Fee = $1,500

SUBTOTAL FEE 100% CD DRAWINGS = $11,000

1. **(Optional) Mechanical Engineering Services** finalize design 100% CD submittal package:
   a. Mechanical General Notes
   b. Mechanical floor plan of cell site
   c. Specification of HVAC units.
   d. Mechanical details

   Fee = $2,150

PART SIX – CONSTRUCTION ADMINISTRATION

1. **Construction Administration (Billed on an as needed basis)**
   Respond to RFIs and coordination of site specific requirements. Submittal Review and punch walk.

   Fee = $6,600

2. **Plan Processing with LA-RICS –** includes preparing and processing of plan submittals.

   Fixed Fee = $1,000

3. **Program Management/Consultant Meetings –** Assist LA-RICS with overall management of projects.

   Fixed Fee = $1,500

SUBTOTAL FEE CONSTRUCTION ADMINISTRATION = $9,100

PART SEVEN – Geotechnical Reports

1. **Geotechnical Reports**
   a. Provide one subsurface exploration within 50 miles distance of Alhambra. For other geotechnical services refer Cost data AESCO proposal No. P5832.

   Fixed Fee = $4,000

EXCEPTIONS APPLICABLE TO ALL SITE TYPES:

1. Zoning reviews by agencies outside of the County of LA are excluded, This includes but is not limited to California Coastal commission (for sites near water) and the US Forrest Service (for sites in the Angeles forest), or additional city agencies.
2. Environmental studies are excluded from the scope.
3. The sites are assumed to disturb one acre or less and therefore a Storm Water Pollution Prevention Plan is not included in the scope.
4. Agency fees.
5. Access to all required areas will be provided at the time of the field survey.
6. A fee for legal descriptions and plats for SCE easements can be provided on a site specific basis.
7. This is not a boundary survey. Boundary information will be from record information only.
8. The survey fees noted above are for a 10,000 square foot area. Should the survey area be larger then additional fees will be required.
9. Monument new property corners and prepare a Record of Survey for approval and recordation with the County of Los Angeles.
10. Potholing or boring of existing utilities to determine locations.

11. Boundary Conflicts with Client provided Title Report deeds and available recorded data, to resolve.
12. Record of Survey.
13. Design of onsite storm drain systems (piping) and hydrology reports is not anticipated nor included.
14. A Water Quality Report is not anticipated nor included.
15. Will coordinate with the electric utility providing commercial service to the project site. Assume the utility service pole is no more than 500 feet from the site fence. Assume up to two one-hour teleconferences with a utility representative. Assume the application for commercial service is by others.
16. Consultant assumes labor and materials for complete installation of the site is by others.
17. Consultant assumes AutoCAD files of the sample plans in the RFP will be provided.
18. Equipment/antenna/utility components (racks, generator, tank, switchboard, HVAC units, coax, cable tray, etc.) will be provided by LA-RICS with specific model numbers for design. Alternates model numbers may be provided but will require additional design services for detailing of support, anchorage, etc. Cutsheets will be provided to the extent possible and shall contain operating weights, geometry, center of gravity, and mounting configurations. Structural design of retaining walls and screen walls is not provided.
19. Structural design of screen walls is not provided. Reinforcement of existing structure and/or design of rooftop platforms or dunnage frames is not provided.
20. Microwave plan and port assignments will be provided by the client.
21. Existing Tower As-Builts and antenna schedule will be provided by the client.
22. Antenna layout plans will be provided by the client.
23. Site signage details will be provided by the client.
24. Asbestos and lead surveys for demolition or partial demolition of existing buildings is not included in our scope.
25. Determine if existing installations are in compliance with current fire codes. Fire alarm and fire protection systems design can be provided as additional service if required.
26. Coordination to assist with AQMD application and permitting shall be an additional fee.
27. Electrical service application form, application fee and utility design fee shall be reimbursable.
28. Excludes field survey services for rough grading, form certification and precise grading certification letters. Excludes preparation of letters.

AS IT PERTAINS TO GEOTECHNICAL INVESTIGATIONS THE FOLLOWING SHALL APPLY:

The geotechnical fee is based on the following assumptions/contingencies:

1. Complete site plans with the notice to proceed.
2. The geotechnical fee does not include costs to provide access to inaccessible sites nor does it include the costs of using a specialized drill rig for access i.e., ATV rig, limited access rig, bulldozer, etc. Prices reflect the use of conventional drill rigs (regular tire, truck-mounted hollow stem auger rig).
3. The geotechnical fee does not include the cost for disposal of hazardous materials, disposal of waste soil or wastewater produced as a result of the field investigation. If hazardous materials are encountered during the course of the field or laboratory investigation, Subconsultant will stop work immediately and consult with Consultant regarding options for proceeding in a safe manner.
4. The geotechnical fee does not include the cost of permits, traffic control, or traffic control plan, if required.
5. Evaluation of landslide or slope stability is not included in the scope of work.
6. The geotechnical fee does not include the services of a geologist if needed.
7. Evaluation of liquefaction is not included in the scope of work.
8. The geotechnical fee does not include the cost for plan reviews or responses to jurisdictional reviews.

LA-RICS AUTHORITY GRANT FUNDING REQUIREMENTS

1. Funding Resources

The parties anticipate that various government funding resources ("Funding Resources"), including municipal, State, federal and/or local grants or other funds, will be used to pay for the Work, including each Deliverable under the Agreement. Certain federal and/or state grant programs that may provide Funding Resources include, but are not limited to, those listed in this Section 1. This list of Funding Resources is not exhaustive and additional Funding Resources may be used to fund portions of the Agreement.

1.1 Urban Area Security Initiative ("UASI")

UASI was authorized by the USA Patriot Act of 2001 (Public Law 107-56) and the Department of Homeland Security Appropriations Act of 2005 (Public Law 108-334). Further information concerning this grant may be found at fema.gov/government/grant, dhs.gov, grants.gov and at CFDA Number 97.067.

1.2 Broadband Technology Opportunities Program ("BTOP")

The American Recovery and Reinvestment Act (Public Law 111-5) provided the Department of Commerce's National Telecommunications and Information Administration (NTIA) and the U.S. Department of Agriculture's Rural Utilities Service (RUS) with $7.2 billion to expand access to broadband services in the United States. Of those funds, the Act provided $4 billion to NTIA to support the deployment of broadband infrastructure, enhance and expand public computer centers, encourage sustainable adoption of broadband service, and develop and maintain a nationwide public map of broadband service capability and availability. Further information may be found at: http://www2.ntia.doc.gov/.

2. General

2.1 Funding of Agreement

Funding for all periods of this Agreement is subject to the continuing availability of federal grants or other funds for the LA-RICS Authority. This Agreement may be terminated in accordance with Paragraph 16 (Compliance with Federal Grant Funding Requirements) of the Base Document upon a loss or reduction of grant funds or other applicable Funding Resources.

2.2. Payment to Consultant

2.2.1 The LA-RICS Authority makes no commitment to fund this Project other than as stated in Paragraph 57 (Termination for Non-Appropriation of Funds) of the Base Document. The LA-RICS Authority shall review Consultant's performance on a periodic basis. If Consultant does not meet its performance measures, the

LA-RICS Authority may, to the extent required or permitted under the Funding Resources, unilaterally reduce the compensation due to Consultant in compliance with the provisions set forth in the Agreement upon written notice to Consultant and as set forth by a written amendment to the Agreement.

2.2.2 Consultant shall be paid only for necessary, reasonable, allocable and allowable expenses incurred under the Agreement. If not on an advanced payment plan, Consultant shall request reimbursements by submitting detailed invoices as required by the LA-RICS Authority. Consultant shall be reimbursed after the LA-RICS Authority has received the all required documents and after the LA-RICS Authority determines that Consultant has incurred and expended funds for reasonable and allowable costs under the Agreement.

3. Compliance With State And Federal Requirements

3.1 Requirements Applicable To All Grant Agreements

Consultant shall comply with all applicable requirements of state, federal and County of Los Angeles laws, executive orders, regulations, program and administrative requirements, policies and any other requirements governing the Agreement. Consultant shall comply with state and federal laws and regulations pertaining to labor, wages, hours and other conditions of employment. Consultant shall comply with new, amended or revised laws, regulations and/or procedures that apply to the performance of the Agreement. These requirements include, but are not limited to, those listed below in this Section 3.

3.2 Office of Management and Budget (OMB) Circulars

Consultant shall comply with OMB Circulars, as applicable: OMB Circular A-21 (Cost Principles for Educational Institutions); OMB Circular A-87 (Cost Principles for State, Local, and Indian Tribal Governments); OMB Circular A-102 (Grants and Cooperative Agreements with State and Local Governments); Common Rule, Subpart C for public agencies, OMB Circular A-110 and/or 2 CFR 215 (Uniform Administrative Requirements for Grants and Other Agreements with Institutions of Higher Education, Hospitals and Other Non-Profit Organizations); OMB Circular A-122 (Cost Principles for Non-Profit Organizations); OMB Circular A-133 (Audits of States, Local Governments, and Non-Profit Organizations).

3.3 Single Audit Act

If federal funds are used in the performance of the Agreement, Consultant shall adhere to the rules and regulations of the Single Audit Act, 31 USC Sec. 7501 et seq. and any administrative regulation or field memos implementing the Act. The provisions of this section shall survive expiration or termination of the Agreement.

3.4 Americans with Disabilities Act

Consultant hereby certifies that it shall comply with the Americans with Disabilities Act 42, USC §§ 12101et seq. and its implementing regulations. Consultant shall provide reasonable accommodations to allow qualified individuals with disabilities to have access to and to participate in its programs, services and activities in accordance with the provisions of the Americans with Disabilities Act. Consultant shall not discriminate against persons with disabilities or against persons due to their relationship to or association with a person with a disability. Any subcontract entered into by Consultant relating to this Agreement shall be subject to the provisions of this section.

3.5 Political and Sectarian Activity Prohibited

3.5.1 None of the funds, materials, property or services provided directly or indirectly under the Agreement shall be used for any partisan political activity, to further the election or defeat of any candidate for public office or for any purpose designed to support or defeat any pending legislation or administrative regulation. None of the funds provided pursuant to the Agreement shall be used for any sectarian purpose or to support or benefit any sectarian activity.

3.5.2 If the Agreement provides for more than $100,000 in grant funds or more than $150,000 in loan funds, Consultant shall submit to the LA-RICS Authority a completed Attachment A (Certification Regarding Lobbying), if required, in accordance with 31 USC § 1352 and Department of Commerce implementing regulations published at 15 CFR Part 28, "New Restrictions on Lobbying." No funds will be released to Consultant until the Certification is filed.

3.5.3 Consultant shall file a Disclosure Form at the end of each calendar quarter in which there occurs any event requiring disclosure or which materially affects the accuracy of any of the information contained in any Disclosure Form previously filed by Consultant. Consultant shall require that the language of this Certification be included in the award documents for all sub-awards at all tiers and that all subcontractors shall certify and disclose accordingly.

3.6 Subcontracts and Procurement

3.6.1 Consultant shall comply with applicable federal standards in the award of any subcontracts. For purposes of the this Agreement, subcontracts shall include but not be limited to, purchase agreements, rental and lease agreements, third party agreements, consultant service contracts and construction subcontracts.

3.6.2 Consultant shall ensure that the terms of the Agreement are incorporated into all its subcontract agreements. Consultant shall submit all its subcontractor agreements to the LA-RICS Authority for review prior to the release of any funds to the subcontractor. Consultant shall withhold funds to any of its subcontractor that fails to comply with the terms and conditions of the Agreement and the respective Consultant's agreement.

3.7 Labor

3.7.1 Consultant shall comply with the Intergovernmental Personnel Act of 1970 (42 U.S.C. §§4728-4763) relating to prescribed requirements for merit systems for programs funded under one of the 19 statutes or regulations specified in Appendix A of OPM's Standards for a Merit System Personnel Administration (5 C.F.R. 900, Subpart F).

3.7.2 Consultant shall comply, as applicable, with the provisions of the Davis-Bacon Act (40 U.S.C. §§276a to 276a-7) as supplemented in the Department of Labor regulations (29 CFR Part 5), the Copeland Act (40 U.S.C. §276c and 18 U.S.C. §874) as supplemented in the Department of Labor regulations (29 CFR Part 3), and the Contract Work Hours and Safety Standards Act (40 U.S.C. §§327-333) as supplemented in the Department of Labor regulations (29 CFR Part 5), regarding labor standards for federally assisted construction sub agreements.

3.7.3 Where labor is required for public works as part of any requirements covered by this Agreement and as such is defined by the California Labor Code, Consultant shall pay no less than the applicable prevailing wages specified. Copy of prevailing wage rates is available for perusal on request.

3.7.4 Consultant shall comply with the Federal Fair Labor Standards Act (29 USC § 201) regarding wages and hours of employment.

3.7.5 None of the funds shall be used to promote or deter union/labor organizing activities. CA Government Code Sec. 16645 et seq.

3.7.6 Consultant shall comply with the Hatch Act (5 USC §§1501-1508 and 7324-7328).

3.7.7 Consultant shall comply with the provisions of Article 3, Chapter 1, Part 7, Division 2 of the Labor Code of California, the California Child Labor Laws and all other applicable statutes, ordinances, and regulations relative to employment, wages, hours of labor and industrial safety.

3.8 Civil Rights

Consultant shall comply with all federal statutes relating to nondiscrimination. These include, but are not limited to: (a) Title VI of the Civil Rights Act of 1964 (P.L. 88-352, 42 U.S.C. §2000d, and implementing regulations), which prohibits discrimination on the basis of race, color, or national origin; (b) Title IX of the Education Amendments of 1972, as amended (20 U.S.C. §§1681- 1683, and 1685-1686), which prohibits discrimination on the basis of sex; (c) Sections 503 and 504 of the Rehabilitation Act of 1973, as amended (29 U.S.C. §794, 45 CFR, Part 84), which prohibits discrimination on the basis of handicaps; (d) The Age Discrimination act of 1975, as amended (42 U.S.C. §§6101-6107), which prohibits discrimination on the basis of age; (e) the Drug Abuse Office and Treatment Act of 1972 (P.L. 92-255), as amended, relating to nondiscrimination on the basis of drug

abuse; (f) the Comprehensive Alcohol Abuse and Alcoholism Prevention, Treatment and Rehabilitation act of 1970 (P.L. 91-616) as amended, relating to nondiscrimination on the basis of alcohol abuse or alcoholism; (g) §§523 and 527 of the Public Health Service Act of 1912 (42 U.S.C. §§290 dd-3 and 290 ee 3), as amended, relating to confidentiality of alcohol and drug abuse patient records; (h) Title VIII of the Civil Rights Act of 1968 (42 U.S.C. §§3601 et seq.), as amended, relating to non-discrimination in the sale, rental or financing of housing; (i) any other nondiscrimination provisions in the specific statute(s) under which application for federal assistance is being made; (j) the requirements of any other nondiscrimination statute(s) which may apply to the application; (k) P.L. 93-348 regarding the protection of human subjects involved in research, development, and related activities supported by this award of assistance; and (l) Title VII of the Civil Rights Act of 1964, as amended by the Equal Employment Opportunity Act of 1972 (42 U.S.C. §2000e).

3.9 Environmental

3.9.1 Consultant shall comply, or has already complied, with the requirements of Titles II and III of the Uniform relocation Assistance and Real Property Acquisition Policies Act of 1970 (P.L. 91-646) which provide for fair and equitable treatment of persons displaced or whose property is acquired as a result of federal or federally-assisted programs. These requirements apply to all interests in real property acquired for project purposes regardless of federal participation in purchases.

3.9.2 Consultant shall comply with environmental standards which may be prescribed pursuant to the following, as applicable: (a) institution of environmental quality control measures under the National Environmental Policy Act of 1969 (P.L. 91-190) and Executive Order (EO) 11514 and 12898; (b) notification of violating facilities pursuant to EO 11738; (c) protection of wetlands pursuant to EO 11990; (d) evaluation of flood hazards in floodplains in accordance with EO 11988; (e) assurance of project consistency with the approved state management program developed under the Coastal Zone Management Act of 1972 (16 U.S.C. §§1451 et seq.); (f) conformity of federal actions to State (Clean Air) Implementation Plans under Section 176(c) of the Clean Air Act of 1955, as amended (42 U.S.C. §§7401 et seq.); (g) protection of underground sources of drinking water under the Safe Drinking Water Act of 1974, as amended (P.L. 93-523) and the California Safe Drinking Water and Toxic Enforcement Act of 1986; (h) protection of endangered species under the Endangered Species Act of 1973, as amended (P.L. 93-205); (i) Flood Disaster Protection Act of 1973 §102(a) (P.L. 93-234); and (j) Section 508 of the Clean Water Act (38 U.S.C. §§1360 et seq.); and (k) Environmental Protection Agency regulations (40 CFR Part 15).

3.9.3 Consultant shall comply with the Wild and Scenic Rivers Act of 1968 (16 U.S.C. §§1271 et seq.) related to protecting components or potential components of the national wild and scenic rivers system.

3.9.4 Consultant shall comply with the Lead-Based Paint Poisoning Prevention Act (42 U.S.C. §§4822 et seq.) that prohibits the use of lead-based paint in construction or rehabilitation of residence structures.

3.9.5 Consultant shall comply with the Federal Water Pollution Control Act (33 U.S.C. § 1251 et seq.) that restores and maintains the chemical, physical and biological integrity of the nation's waters.

3.9.6 Consultant shall ensure that the facilities under its ownership, lease or supervision which shall be utilized in the accomplishment of this Project are not listed in the Environmental Protection Agency's (EPA) list of Violating Facilities and that it will notify the Federal Grantor agency of the receipt of any communication from the Director of the EPA Office of Federal Activities indicating that a facility to be used in the project is under consideration for listing by the EPA.

3.9.7 Consultant ensures that it is in compliance with the California Environmental Quality Act (CEQA), Public Resources Code §§21000 et seq., and California Code of Regulations, Title 14, Chapter 3, Section 15000-15007, including but not limited to as amended by Assembly Bill 1486 (2012), and is not impacting the environment negatively.

3.9.8 Consultant shall comply with the Energy Policy and Conservation Act (P.L. 94-163, 89 Stat. 871).

3.9.9 Consultant shall comply, as applicable, with the provisions of the Coastal Barrier Resources Act (P.L. 97-348) dated October 19, 1982 (16 USC 3501 et.seq.) which prohibits the expenditure of most new federal funds within the units of the Coastal Barrier Resources System.

3.9.10 Consultant shall comply with all applicable federal, state, and local environmental and historical preservation (EHP) requirements. Failure to meet federal, state, and local EHP requirements and obtain applicable permits may jeopardize federal funding. Consultant will comply with all conditions placed on any project as the result of the EHP review; any change to the scope of work of a project will require re-evaluation of compliance with these EHP requirements.

3.9.11 Consultant shall assist the LA-RICS Authority in complying with the National Environmental Policy Act (NEPA), the National Historic Preservation Act, and other related federal environmental impact analyses requirements in the use of these Grant funds.

3.10 Preservation

Consultant shall comply with Section 106 of the National Historic Preservation Act of 1966, as amended (16 U.S.C. §470), EO 11593 (identification and protection of historic properties), the Archaeological and Historic Preservation Act of 1974 (16

U.S.C. §§469a-1 et seq.) and Section 7 of the Endangered Species Act (16 U.S.C. 1531 et seq.).

3.11 Suspension and Debarment

Consultant shall comply with Federal Register, Volume 68, Number 228, regarding Suspension and Debarment, and Consultant shall submit a Certification Regarding Debarment required by Executive Orders 12459 and 12689, and any amendment thereto. Said Certification shall be submitted to the LA-RICS Authority concurrent with the execution of the Agreement and shall certify that neither Consultant nor its principals are presently debarred, suspended, proposed for debarment, declared ineligible or voluntarily excluded from participation in this transaction by any federal department head or agency. Consultant shall require that the language of this Certification be included in the award documents for all sub-award at all tiers and that all its Subcontractors shall certify accordingly. Consultant shall immediately inform the LA-RICS Authority if it is debarred or becomes debarred during the term of the Agreement.

3.12 Drug-Free Workplace

Consultant shall comply with the Federal Drug-Free Workplace Act of 1988, 41 USC §§701 et seq., 28 CFR Part 67and Department of Commerce implementing regulations published at 15 CFR Part 29, "Government-wide Requirements for Drug-Free Workplace (Financial Assistance)" (published in the Federal Register on November 26, 2003, 68 FR 66534), which require that Consultant take steps to provide a drug-free workplace; and the California Drug-Free Workplace Act of 1990, CA Gov't Code §§ 8350-8357.

3.13 Hotel and Motel Fire Safety Act of 1990

In accordance with Section 6 of the Hotel and Motel Fire Safety Act of 1990, 15 U.S.C. §2225a, the recipient agrees to ensure that all conference, meeting, convention, or training space funded in whole or in part with federal funds, complies with the fire prevention and control guidelines of the Federal Fire Prevention and Control Act of 1974, 15 U.S.C. §2225.

3.14 Animal Welfare

Consultant shall comply with the Laboratory Animal Welfare Act of 1966, as amended (P.L. 89-544, 7 USC §§2131 et. seq.).

3.15 Public Law 110-161

Consultant shall ensure, pursuant to the Consolidated Appropriations Act of 2008 (P.L. 110-161), that grant funds must not be used in contravention of the federal buildings performance and reporting requirements of Executive Order No. 13123, part 3 of title V of the National Energy Conservation Policy Act (42 USC 8251 et Seq.) or subtitle A of title I of the Energy Policy Act of 2005 (including the

amendments made thereby), nor shall grant funds be used in contravention of Section 303 of the Energy Policy Act of 1992 (42 USC 13212).

3.16 Public Law 103-227

Consultant must comply with Public Law 103-227, Part C-Environmental Tobacco Smoke, also known as the Pro-Children Act of 1994 (Act). This Act requires that smoking not be permitted in any portion of any indoor facility owned or leased or contracted by entity and used routinely or regularly for the provision of health, day care, education, or library services to children under the age of 18, if the services are funded by federal programs either directly or through state and local governments. Federal programs include grants, cooperative agreements, loans or loan guarantees, and contracts. The law does not apply to children's services provided in private residences, facilities funded solely by Medicare or Medicaid funds, and portions of facilities used for inpatient drug and alcohol treatment.

3.17 Public Law 103-333

Consultant shall assure, pursuant to Public Law 103-333, to the extent practicable, that all equipment and products purchased with funds made available under the Agreement shall be American made.

3.18 Faith-Based Activities

Organizations that are religious or faith-based are eligible, on the same basis as any other organization, to participate in this grant-funded program. However, a Consultant that participates in a grant-funded program shall comply with the following provisions if it is deemed to be a religious or faith-based organization.

3.18.1 Consultant may not engage in inherently religious activities, such as worship, religious instruction, or proselytization, as part of the programs or services funded under this Contact. If Consultant conducts such activities, the activities must be offered separately, in time or location, from the programs or services funded under this Contract, and participation must be voluntary for the beneficiaries of the grant-funded programs or services.

3.18.2 A religious or faith-based Consultant will retain its independence from federal, state, and local governments, and may continue to carry out its mission, including the definition, practice, and expression of its religious beliefs, provided that it does not use direct grant funds to support any inherently religious activities, such as worship, religious instruction, or proselytization. A religious or faith-based Consultant may use space in their facilities to provide grant-funded services, without removing religious art, icons, scriptures, or other religious symbols. A religious or faith-based Consultant retains its LA-RICS Authority over its internal governance, and it may retain religious terms in its organization's name, select its board members on a religious basis, and include religious references in its organization's mission statements and other governing documents.

3.19 USA Patriot Act of 2001

All recipients of financial assistance will comply with the requirements of the Uniting and Strengthening America by Providing Appropriate Tools Required to Intercept and Obstruct Terrorism Act (USA PATRIOT Act), which amends 18 U.S.C. §§175–175c. Among other things, it prescribes criminal penalties for possession of any biological agent, toxin, or delivery system of a type or in a quantity that is not reasonably justified by a prophylactic, protective, bona fide research, or other peaceful purpose. The USA PATRIOT Act also establishes restrictions on access to specified materials. —Restricted persons, as defined by the USA PATRIOT Act, may not possess, ship, transport, or receive any biological agent or toxin that is listed as a select agent.

3.20 Trafficking Victims Protection of 2000

All recipients of financial assistance will comply with the requirements of the government-wide award term which implements Section 106(g) of the Trafficking Victims Protection Act (TVPA) of 2000, as amended (22 U.S.C. §7104), located at 2 CFR Part §175. This is implemented in accordance with OMB Interim Final Guidance, Federal Register, Volume 72, No. 218, November 13, 2007. In accordance with the statutory requirement, in each agency award under which funding is provided to a private entity, Section 106(g) of the TVPA, as amended, requires the agency to include a condition that authorizes the agency to terminate the award, without penalty, if the recipient or a sub-recipient

a. Engages in severe forms of trafficking in persons during the period of time that the award is in effect;

b. Procures a commercial sex act during the period of time that the award is in effect; or

c. Uses forced labor in the performance of the award or sub-awards under the award. Full text of the award term is provided at 2 CFR §175.15.

3.21 Fly America Act of 1974

All recipients of financial assistance will comply with the requirements of the Preference for U.S. Flag Air Carriers: Travel supported by U.S. Government funds requirement, which states preference for the use of U.S. flag air carriers (air carriers holding certificates under 49 U.S.C. §41102) for international air transportation of people and property to the extent that such service is available, in accordance with the International Air Transportation Fair Competitive Practices Act of 1974 (49 U.S.C. §40118) and the interpretative guidelines issued by the Comptroller General of the United States in the March 31, 1981, amendment to Comptroller General Decision B138942

4. Audits and Inspections Applicable to All Grants

4.1 Records Inspection

At any time during normal business hours and as often as the Grantor, the U.S. Comptroller General, and the Auditor General of the State of California, through any of its authorized representatives, or the LA-RICS Authority, may deem necessary, Consultant shall make available for examination, all of its records with respect to all matters covered by the Agreement. The LA-RICS Authority, the U.S. Comptroller General and the Auditor General of the State of California, through any authorized representative, shall have the LA-RICS Authority to audit, examine and make excerpts, or transcripts from records, including all Consultant's and its subcontractor's invoices, materials, payrolls, records of personnel, conditions of employment and other data relating to all matters covered by the Agreement. Consultant shall provide any reports to the LA-RICS Authority requested by any Funding Resource regarding performance of the Agreement.

4.2 Records Maintenance

Records, in their original form, shall be maintained in accordance with requirements prescribed by the LA-RICS Authority with respect to all matters covered on file for all documents specified in the Agreement. Original forms are to be maintained on file for all documents specified in the Agreement. Such records shall be retained for a period of five (5) years after termination of the Agreement and after final disposition of all pending matters. "Pending matters" shall include, but are not limited to, an audit, litigation or other actions involving records. The LA-RICS Authority may, at its discretion, take possession of, retain and audit said records. Records, in their original form pertaining to matters covered by the Agreement, shall at all times be retained in the location specified in Paragraph 46 (Record Retention and Inspection/Audit Settlement) of the Base Document.

4.3 Right to Access

Access by the LA-RICS Authority, the State of California, the Department Homeland Security, the Department of Commerce, the Comptroller General of the United States, the Offices of the Inspector General or any of their duly authorized representatives to any books, documents, papers and records (including computer records) of Consultant which are directly pertinent to charges to the Project, shall not be denied in order to conduct audits and examinations and make excerpts, transcripts, and photocopies. This right also includes timely and reasonable access to Consultant's and subcontractor's personnel for the purpose of interviews and discussions related to such documents.

4.4 Reporting

Consultant agrees to provide any reports requested by the LA-RICS Authority regarding performance of the Agreement and comply with all reporting, data collection and evaluation necessary to complete grant reporting requirements as detailed in Recovery Act Grant requirements and Statutes and Regulations Applicable to the Homeland Security Grants.

4.5 Failure to Comply

The LA-RICS Authority reserves the right to impose any or all of the following sanctions for Consultant's failure to comply with the Single Audit Act and the provisions of the Agreement:

a. Withhold a percentage of payments, at the LA-RICS Authority's sole discretion, until the audit is completed satisfactorily and submitted to the department;

b. Suspend payments due to Consultant until the audit is completed satisfactorily and submitted to the LA-RICS Authority; and/or

c. Impose provisions of default or liquidated damages or other applicable provisions of the Base Document as set forth therein.

4.6 Excerpts and Transcripts

The LA-RICS Authority, Auditor General of the State of California, Grantor, Director of the Office of Civil Rights and the U.S. Comptroller General shall have the LA-RICS Authority to audit, examine, and make excerpts or transcripts from records, including contracts, invoices, customer records and other records supporting the Agreement. Audits of earned funds are limited to determining if such funds were earned in accordance with the Agreement.

4.7 Physical Inspections

The LA-RICS Authority shall have the LA-RICS Authority to make physical inspections and to require such physical safeguarding devices as locks, alarms, safes, fire extinguishers, sprinkler systems, etc., to safeguard property, records and/or equipment used in the performance of the Agreement.

4.8 Notice of Fault

Should a fiscal or special audit determine that Consultant has earned funds which are questioned under the criteria set forth herein, Consultant shall be notified and given the opportunity to justify questioned expenditures prior to the LA-RICS Authority's final determination of disallowed costs, in accordance with the procedures established under these Funding Requirements.

5. Prohibition of Legal Proceedings

Consultant is prohibited from using any Funding Resources received under the Agreement for the purpose of instituting legal proceeding against the LA-RICS Authority, its Members or their official representatives.

6. Participation of Small, Minority and Women's Business

Consistent with Executive Order Nos. 11625, 12432, and 12138, Consultant shall, and require its subcontractors to, provide opportunities for small, minority and women's businesses to participate in contracting and procurement activities generated under the Agreement. Consultant shall:

a. Place qualified small and minority businesses and women's business enterprises on solicitation lists;

b. Assure that small and minority businesses, and women's business enterprises are solicited whenever they are potential sources;

c. Divide total requirements, when economically feasible, into smaller tasks or quantities to permit maximum participation by small and minority business, and women's business enterprises;

d. Establish delivery schedules, where the requirement permits, which encourage participation by small and minority business, and women's business enterprises; and

e. Use the services and assistance of the Small Business Administration, and the Minority Business Development Agency of the Department of Commerce.

7. Other Grant Requirements

7.1 FEMA/OSHA Standards

Consultant agrees not to undertake any project or construction related activity prior to a full environmental and historic preservation (EHP) review. Failure to adhere to the EHP review will result in a non-compliance finding. Consultant agrees not to undertake any activity that has the potential to impact the EHP resources without the prior written approval of FEMA/OHS, including, but not limited to, communications towers, physical security enhancements, new construction and modifications to buildings that are 50 (fifty) years old or more. If ground disturbing activities occur during the Project implementation, the recipient must ensure monitoring of the ground disturbance and if any potential archeological resources are discovered, the recipient will immediately cease activity in that area and notify OHS/FEMA and the appropriate State Historic Preservation Office.

7.2 Publishing Documents

Consultant agrees that all publications created or published with funding from the applicable Funding Resources shall prominently contain the following statement: "This document was prepared under a grant from [APPLICABLE GRANT]. Points of view or opinions expressed in this document are those of the authors and do not necessarily represent the official position or policies of the Grantor." Contactor also agrees that, when practicable, any equipment purchased with grant funding shall be prominently marked as follows: "Purchased with funds provided by [SOURCE]."

7.3 Grant Modification

Consultant shall comply with any modification or additional requirements that may be imposed by law and future grant guidance and clarification of federal requirements.

7.4 DUNS Number

Consultant shall, and shall require its subcontractors to obtain and maintain its own Dun and Brad Street Data Numbering System ("DUNS") Number, which shall be kept current at all times during which Consultant and its subcontractor received Grant Funds.

7.5 Subcontract to a Federal Agency

Consultant shall not make any award and shall not permit its subcontractors to make any award to a federal department, agency, instrumentality, or employee thereof, unless prior written approval is obtain from the appropriate Grant Officer and the LA-RICS Authority.

8. Recovery Act Grant Requirements

8.1 Recovery Act: Buy American

If Funding Resources are used under this Agreement to construct, alter, maintain or repair a public building or public work, Consultant should be aware that the Recovery Act (in Section 1605) contains a "Buy American" provision that applies to iron, steel and manufactured goods, subject to certain exceptions. The provision is to be applied in a manner consistent with United States obligations under international agreements. Consultant shall comply, and shall require its subcontractors to comply with the terms of the ARRA Buy American Requirements, except for those components of the broadband infrastructure for which the Secretary of Commerce has granted a limited waiver. The Secretary of Commerce has granted a limited waiver of the Recovery Act's Buy American requirements with respect to certain broadband equipment that will be used in projects funded under the BTOP grant. A description of this equipment is included in the notice of waiver published in the Federal Register at 74 FR 31410 (July 1, 2009).

8.2 Recovery Act: Wage Rate Requirements Davis Bacon Act

8.2.1 Section 1606 of the Recovery Act (Pub. L. No. 111-5, 123 Stat. 115) requires that all laborers and mechanics employed by contractors and subcontractors on projects funded directly by or assisted in whole or in part by and through the Federal Government pursuant to the Recovery Act shall be paid wages at rates not less than those prevailing on projects of a character similar in the locality as determined by the Secretary of Labor in accordance with subchapter IV of chapter 31 of title 40, United States Code. Pursuant to Reorganization Plan No. 14 and the Copeland Act, 40 U.S.C. 3145, the Department of Labor has issued regulations at 29 CFR Parts 1, 3, and 5 to implement the Davis-Bacon and related Acts.

8.2.2 Consultant shall comply with The Davis-Bacon Act and the guidance found at 29 C.F.R. pts. 1, 3, and 5, such that any covered contract with a contractor or subcontractor in excess of $2,000 for construction, alteration or repair (including painting and decorating) shall contain the contract clauses found in 29 C.F.R. 5.5(a), to ensure that all laborers and mechanics employed on the Project receive payment of not less than the prevailing wage.

8.2.3 Consultant shall obtain and maintain its official records documentation of weekly certified payroll reports and the Statement of Compliance in accordance with Section 1606 of the Recovery Act and the Davis-Bacon Act and related acts. Consultant is not required to submit this documentation except in response to a request for this information from the LA-RICS Authority or from the Grants Office.

8.3 Whistleblower Protection Act Requirement

8.3.1 Consultant shall comply with the Whistleblower Protection requirements of the American Recovery and Reinvestment Act (Recovery Act), Section 553 of Division A, Title XV, Public Law 111-5 which provides protection for employees of non-federal employers including employees of state and local governments, contractors, subcontractors, recipients, and any other non-federal employers receiving Recovery Act fund recipients, making specified disclosures relating to possible fraud, waste, or abuse of Recovery Act funds. The act requires any non-federal employer receiving Recovery Act funds to post a notice of the rights and remedies provided under the Act. The Recipient shall post notice of employees rights and remedies for whistleblower protections provided under Section 1553 of the American Recovery and Reinvestment Act of 2009 (Pub. L. 111-5) and shall include this notice requirement in all contracts with subrecipients, contractors, and subcontractors.

8.3.2 Recipients are reminded that the Office of Inspector General will verify the appropriate place of this poster as part of any field work conducted. Failure to display the poster may result in an audit finding. The poster can be downloaded from the following web site: http://www.oig.doc.gov/recovery/whistleblower.html.

8.4 Use of the American Recovery and Reinvestment Act Logo on Construction Signs

All projects which are funded by the Recovery Act shall display signage that features the Primary Emblem throughout the construction phase. The signage should be displayed in a prominent location on site. Some exclusions may apply. The Primary Emblem should not be displayed at a size less than 6 inches in diameter. Additional instructions regarding specifications may be found at: http://www2.ntia.doc.gov/.

8.5 Recovery Act One-Time Funding

Consultant understands and agrees that Recovery Act funding is intended to provide a one-time injection of funds for purposes of stimulating the American economy

8.6 Recovery Act: Limit on Funds

The Recovery Act specifically provides that funds may not be used by any state or local government, or any private entity, for any casino or other gambling establishment, aquarium, zoo, golf course or swimming pool.

8.7 Recovery Act: Use of Funds in Conjunction with Funds from Other Sources

Recovery Act funds may be used in conjunction with other funding as necessary to complete projects, but tracking and reporting of Recovery Act funds must be separate, to meet the reporting and other requirements of the Recovery Act and other applicable law. There can be no commingling of funds. (See "Accountability and Transparency under the Recovery Act," below.)

8.8 Accountability and Transparency Under the Recovery Act

8.8.1 Separate Tracking and Reporting of Recovery Act Funds and Outcomes

8.8.1.1 Consistent with the special purposes and goals of the Recovery Act, and its strong emphasis on accountability and transparency, it is essential that all funds from a Recovery Act grant be tracked, accounted for and reported on separately from all other funds. Consultant must also be prepared to track and report on the specific outcomes and benefits attributable to use of Recovery Act funds.

8.8.1.2 Consultant agrees to track, account for, and report on all funds from this Recovery Act Grant award (including specific outcomes and benefits attributable to Recovery Act funds) separately from all other funds, including Grantor award funds from non-Recovery Act awards awarded for the same or similar purposes or programs. Accordingly, Consultant's accounting systems must ensure that funds from this Recovery Act Grant are not commingled with funds from any other source. Consultant further agrees that all personnel whose activities are to be charged to the award will maintain timesheets to document hours worked for activities related to this award and non-award related activities.

8.8.1.3 Consultant understands and agrees that misuse of grant funds may result in a range of penalties, including suspension of current and future funds, suspension or debarment from federal grants, recoupment of monies provided under a grant and civil and/or criminal penalties.

8.8.2 Quarterly Financial and Programmatic Reporting

8.8.2.1 Section 1512(c) of the Recovery Act sets out detailed requirements for quarterly reports that must be submitted within 10 days of the end of each calendar quarter. Receipt of funds will be contingent on meeting the Recovery Act reporting requirements.

8.8.2.2 Under this Recovery Act program, quarterly financial and programmatic reporting will be required and will be due within 10 calendar days after the end of each calendar quarter Consultant shall provide to the LA-RICS Authority data required to complete and submit financial and programmatic reports no later than the last day of each calendar quarter.

8.8.2.3 This Recovery Act Grant award requires Subrecipients to complete projects or activities which are funded under the Recovery Act and to report on use of Recovery Act funds provided by this Grant. Information from these reports will be made available to the public.

8.8.2.4 Section 1512 of the Recovery Act requires quarterly reporting of all Recovery Act grant recipients and subrecipients. The LA-RICS Authority is required to comply with these reporting requirements using a template provided by the Department of Commerce to submit the requested data. In order to assist the LA-RICS Authority in complying with its reporting requirements regarding the use of Grant funds by the Contract, Consultant shall provide sufficiently detailed information regarding job creation in connection with its use of Grant funds to the Recipient on a quarterly basis. Consultant shall provide any additional information as may be necessary for the LA-RICS Authority to submit complete and full quarterly reports to the Department of Commerce. Consultant must maintain, and provide to the Recipient on a quarterly basis, auditable documentation supporting all reported data, including jobs data and provide copies to the LA-RICS Authority as requested. Documentation should provide evidence that i) Created/retained positions and overtime hours are funded by Recovery Act awards, ii) Personnel are directly supporting Recovery Act projects and activities, and iii) Positions meet the criteria for "created"/"retained" positions and overtime hours.

8.8.2.5 Recommended documentation includes: old and new organizational charts; new position descriptions; job postings, offer letters and acceptance forms; staffing lists; timecards and payroll records; budget comparisons and/or projections before and after the Recovery Act award date; formal layoff recommendations and retractions (memos, reports); minutes of formal meetings where official budget decisions are made; and employee activity reports.

8.8.2.6 Reporting information shall be submitted to the LA-RICS Authority in accordance with the following reporting schedule:

Reporting Period	Due Date
July 1 – September 31	October 5th
October 1 – December 31	January 5th
January 1 – March 31	April 5th
April 1 – June 30	July 5th

8.8.2.7 Consultant understands that failure to comply with any of the above assurances may result in suspension, termination or reduction of Grant funds, and repayment by Consultant to the LA-RICS Authority of any unlawful expenditure.

8.8.2.8 To obtain the Grant funds, the grantors required an authorized representative of the LA-RICS Authority to sign certain promises and special conditions regarding the way the Grant funds would be spent ("Special Conditions"). By signing these Special Conditions, the LA-RICS Authority became liable to the Grantor for any funds that are used in violation of the Grant requirements. Consultant shall be liable to the Grantor for any funds the Grantor determines Consultant used in violation of these Special Conditions. Consultant shall indemnify and hold harmless the LA-RICS Authority for any sums the Grantor determines Consultant used in violation of the Special Conditions.

8.8.3 Consultant Reports

Not later than 5 days after the end of each calendar quarter, Consultant shall submit a report to the LA-RICS Authority that contains:

a. The total amount of recovery funds received from that agency;

b. The amount of recovery funds received that were expended or obligated to projects or activities;

c. A detailed list of all projects or activities for which recovery funds were expended or obligated, including:

d. The name of the project or activity;

e. A description of the project or activity;

f. An evaluation of the completion status of the project or activity;

g. An estimate of the number of jobs created and the number of jobs retained by the project or activity; and

h. For infrastructure investments made by state and local governments, the purpose, total cost, and rationale of the agency for funding the infrastructure investment with funds made available under this Act, and name of the person to contact at the agency if there are concerns with the infrastructure investment; and

i. Detailed information on any subcontracts or sub-grants awarded by the recipient to include the data elements required to comply with the Federal Funding Accountability and Transparency Act of 2006 (Public Law 109-282), allowing aggregate reporting on awards below $25,000 or to individuals, as prescribed by the Director of the Office of Management and Budget.

8.8.4 Monitoring of Subcontractors

All Contractors should bear in mind that any recipient of grant funds will be responsible for monitoring of sub-contracts under the Funding Resources in accordance with all applicable statutes, regulations, OMB circulars, and guidelines, including the OJP Financial Guide. Primary Consultant will be responsible for oversight of sub-contractors spending and monitoring of specific outcomes and benefits attributable to use of Recovery Act funds

8.8.5 Reporting Fraud, Waste, Error and Abuse

8.8.5.1 Consultant shall promptly refer to the Department of Commerce Inspector General any credible evidence that a principal, employee, agent, contractor, subrecipient, subcontractor, or other person has submitted a false claim under the False Claims Act or has committed a criminal or civil violation of laws pertaining to fraud, conflict of interest, bribery, gratuity, or similar misconduct involving those funds. Referrals can be made online at http://www.oig.doc.gov/oig/hotline/000016.html or by calling 1-800-424-5197.

8.8.5.2 The Recovery Act provides certain protections against reprisals for employees of non-federal employers who disclose information reasonably believed to be evidence of gross management, gross waste, substantial and specific danger to public health or safety, abuse of LA-RICS Authority, or violations of law related to contracts or grants using Recovery Act funds. For additional information, refer to Section 1553 of the Recovery Act.

9. Statutes and Regulations Applicable to the Homeland Security Grant Program (UASI)

9.1 Applicable Statutes and Regulations

Consultant shall comply with all applicable requirements of state and federal laws, executive orders, regulations, program and administrative requirements, policies and any other requirements governing this particular grant program. Consultant shall, as applicable, comply with new, amended, or revised laws, regulations and/or

procedures that apply to the performance of the Agreement. These requirements include, but are not limited to:

9.1.1 Title 28 CFR Part 66 and 70; EO 12372; Current edition of the OJP Financial Guide (M71 00.1);Current edition of the OJP Financial Guide (M71 00.1); Current edition of the DHS Financial Management Guide; U.S. Department of Homeland Security, Office of State and Local Government Coordination and Preparedness, Office for Domestic Preparedness, Urban Areas Security Initiative Grant Program II; ODP WMD Training Course Catalogue; and DOJ Office for Civil Rights Regulations; Title 2 CFR Parts 215,225, 220, and 230; Title 44 CFR, including part 13; Federal Acquisition Regulations (FAR),Part 31.2 Contract Cost Principles and Procedures, Contracts with Commercial Organizations; DHS Grant Guidance for each applicable grant year; CalEMA Supplement and CalEMA Grant Assurances for year applicable grant year; DHS Information Bulletins; and GMMs.

9.1.2 Standardized Emergency Management System (SEMS) requirements as stated in the California Emergency Services Act, Government Code Chapter 7 of the Division 1 of Title 2, § 8607.1(e) and CCR Title 19, §§ 2445-2448.

9.1.3 Provisions of Title 2, 6, 28, 44 CFR applicable to grants and cooperative agreements, including Part 18, Administrative Review Procedures; Part 20, Criminal Justice Information Systems; Part 22, Criminal Intelligence Systems Operating Policies; Part 30, Intergovernmental Review of Department of Justice Programs and Activities; part 35, Nondiscrimination on the Basis of Disability in State and Local Government Services; Part 38, Equal Treatment of Faith-based Organizations; Part 42, Nondiscrimination; Part 61, Procedures for Implementing the National Environmental Policy Act; part 63, Floodplain Management and Wetland Protection Procedures; Part 64, Floodplain Management and Wetland Protection Procedures; federal laws or regulations applicable to Federal Assistance programs; part 69, New Restriction on Lobbying; Part 70, Uniform Administrative Requirements for Grants and Cooperative Agreements (including sub-awards) with Institutions of Higher Learning, Hospitals and other Non-Profit Organizations; and Part 83, Government-Wide Requirements for a Drug Free Workplace (grants).

9.1.4 Nondiscrimination requirements of the Omnibus Crime Control and Safe Streets Act of 1968, as amended, 42 USC 3789(d), or the Juvenile Justice and Delinquency Prevention Act, or the Victims of Crime Act, as appropriate; the provisions of the current edition of the Office of Justice Programs Financial and Administrative Guide for Grants, M7100.1, and all other applicable federal laws, orders, circulars, or regulation.

9.2 Use of DHS Seal, Logo and Flags

All recipients of financial assistance must obtain DHS' approval prior to using the DHS seal(s), logos, crests or reproductions of flags or likenesses of DHS agency

officials, including use of the 16 United States Coast Guard seal, logo, crests or reproductions of flags or likeness of Coast Guard officials.

10. Non-Compliance

Consultant understands that failure to comply with any of the above requirements as they relate to the work contemplated under this Agreement may result in suspension, termination or reduction of grant funds, and repayment by the Consultant to the LA-RICS Authority of any unlawful expenditure.

11. Conflict of Interest

11.1 General

Consultant warrants and represents that none of its directors, officers, employees or agents shall participate in selecting or administrating any subcontract supported (in whole or in part) by federal funds where such person is a director, officer, employee or agent of the subcontractor; or where the selection of subcontractor is or has the appearance of being motivated by a desire for personal gain for themselves or others such as family business, etc.; or where such person knows or should have known that:

a. A member of such person's immediate family or domestic partner or organization has a financial interest in the subcontract;

b. The Consultant is someone with whom such person has or is negotiating any prospective employment; or

c. The participation of such person would be prohibitive by the California Political Reform Act, California Government Code Section 8711 et seq. if such person were a public officer, because such person would have a "financial or other interest" in the subcontract.

11.2 Definitions

11.2.1 Immediate Family

The term "immediate family" includes but is not limited to domestic partner and/or those persons related by blood or marriage, such as husband, wife, father, mother, brother, sister, son , daughter, father in law, mother in law, brother in law, sister in law, son in law, daughter in law.

11.2.2 Financial or Other Interest

The term "financial or other interest" includes but is not limited to:

a. Any direct or indirect financial interest in the specific contract, including a commission or fee, a share of the proceeds, prospect of a promotion or of future employment, a profit, or any other form of financial reward.

b. Any of the following interests in the Consultant ownership: partnership interest or other beneficial interest of five percent or more; ownership of five percent or more of the stock; employment in a managerial capacity; or membership on the board of directors or governing body.

11.3 Representations

11.3.1 Consultant further covenants that no officer, director, employee or agent shall solicit or accept gratuities, favors, anything of monetary value from any actual or potential Consultant, supplier, a party to a sub agreement, (or persons who are otherwise in a position to benefit from the actions of any officer, employee or agent).

11.3.2 Consultant shall not subcontract with a former director, officer or employee within a one (1) year period following the termination of the relationship between said person and Consultant.

11.3.3 Prior to obtaining the LA-RICS Authority's approval of any subcontract, Consultant shall disclose to the LA-RICS Authority any relationship, financial or otherwise, direct or indirect, of Consultant or any of its officer, directors or employees or their immediate family with the proposed Consultant and its officer, directors or employees.

11.3.4 For further clarification of the meaning of any of the terms used herein, the parties agree that references shall be made to the guidelines, rules, and laws of the County of Los Angeles, State of California, and federal regulations regarding conflict of interest.

11.3.5 Consultant warrants that it has not paid or given and will not pay or give to any third person any money or other consideration for obtaining the Agreement.

11.3.6 Consultant covenants that no member, officer or employee of Consultant shall have interest, direct or indirect, in any contract or subcontract or the proceeds thereof for work to be performed in connection with this Project during his/her tenure as such employee, member or officer or for one year thereafter.

11.3.7 Consultant shall incorporate the foregoing subsections of this section into every agreement that it enters into in connection with this Agreement.

12. Miscellaneous

12.1 Travel Expenses

To the extent compensation for travel expenses is allowed under the Agreement, Consultant shall be compensated for Consultant's reasonable travel expenses incurred in the performance of the Agreement, to include travel and per diem, unless otherwise expressed. Consultant's total travel for in-state and/or out-of-state and per diem costs shall be included in the contract budget(s). All travel including out-of-state travel not included in the budget(s) shall not be reimbursed without prior written authorization from the LA-RICS Authority.

12.2 Obligations Binding on Subcontractors

Consultant shall require all Subcontractors to comply with the applicable obligations of this Attachment 4, by incorporating the terms of this Attachment 4 into all subcontracts.

12.3 Inventions, Patents and Copyrights

12.3.1 Reporting Procedure for Inventions

If any project of Consultant funded under this Agreement produces any invention or discovery ("Invention") patentable or otherwise under Title 35 of the U.S. Code, including, without limitation, processes and business methods made in the course of work under this Agreement, Consultant shall report the fact and disclose the Invention promptly and fully to the LA-RICS Authority. The LA-RICS Authority shall report the fact and disclose the Invention to the each federal and state granting agency ("Grantors"). Unless there is a prior agreement between the LA-RICS Authority and Grantors, Grantors shall determine whether to seek protection on the Invention. Grantors shall determine how the rights in the Invention, including rights under any patent issued thereon, will be allocated and administered in order to protect the public interest consistent with the policy ("Policy") embodied in the Federal Acquisition Regulations System, which is based on Ch. 18 of Title 35 U.S.C. Sections 200 et seq. (Pub. L. 95-517, Pub. L. 98-620, 37 CFR part 401); Presidential Memorandum on Government Patent Policy to the Heads of the Executive Departments and Agencies, dated 2/18/1983); and Executive Order 12591, 4/10/87, 52 FR 13414, 3 CFR, 1987 Comp., p. 220 (as amended by Executive Order 12618, 12/22/87, 52 FR 48661, 3 CFR, 1987 Comp., p. 262). Consultant hereby agrees to be bound by the Policy, will contractually require its personnel to be bound by the Policy, and will consult with the LA-RICS Authority and Grantors regarding allocation of any patent rights that arise from, or are purchased with, Grant Funds.

12.3.2 Rights to Use Inventions

The LA-RICS Authority and Grantors shall have an unencumbered right, and a non-exclusive, irrevocable, royalty-free license, to use, manufacture, improve upon, and allow others to do so for all government purposes, any Invention developed under this Agreement.

12.3.3 Copyright Policy

12.3.3.1 Unless otherwise provided by the terms of the Grantors or of this Agreement, when copyrightable material ("Material") is developed under this Agreement, the author, the LA-RICS Authority or Grantors, at Grantors and LA-RICS Authority's discretion, may copyright the Material. If the Grantors and LA-RICS Authority decline to copyright the Material, the Grantors and LA-RICS Authority shall have an unencumbered right, and a non-exclusive, irrevocable, royalty-free license, to use, manufacture, improve upon, and allow others to do so for all government purposes, any Material developed under this Agreement.

12.3.3.2 Grantors shall have an unencumbered right, and a non-exclusive, irrevocable, royalty-free license, to manufacture, improve upon, reproduce, publish, or otherwise use, and authorize others to use, for Federal Government purposes: (a) any Material developed under this Agreement and (b) any rights of copyright to which Consultant purchases ownership with Grant Funds.

12.3.3.3 Consultant shall comply with 24 CFR 85.34.

12.3.4 Rights to Data

The Grantors and the LA-RICS Authority shall have unlimited rights or copyright license to any data first produced or delivered under this Agreement. "Unlimited rights" means the right to use, disclose, reproduce, prepare derivative works, distribute copies to the public, and perform and display publicly, or permit others to do so; as required by 48 CFR 27.401. Where the data are not first produced under this Agreement or are published copyrighted data with the notice of 17 U.S.C. Section 401 or 402, the Grantors acquires the data under a copyright license as set forth in 48 CFR 27.404(f)(2) instead of unlimited rights. (48 CFR 27.404(a)).

12.3.5 Obligations Binding on Subcontractors

Consultant shall require all its subcontractors funded by Grant Funds to comply with the obligations of this section by incorporating the terms of this section into all contracts and subcontracts.

13. Public Safety Broadband and FCC Requirements

13.1 FCC Compliance

13.1.1 Consultant shall comply with all applicable Federal Communications Commission's (FCC) waiver and other orders, rule, regulations and public notices related to the project or the 700 MHz public safety broadband spectrum (758-768 MHz and 788-798 MHz) issued by the FCC, the Emergency Response Interoperability Center (ERIC) or the Public Safety and Homeland Security Bureau (Bureau), including but not limited to, if applicable, Waiver Order in PS Docket 06-229, adopted on May 11, 2010 (FCC 10-79) and the FCC Technology

Order adopted on December 10, 2010 (DA 10-2342). Consultant shall also comply with the Communications Act of 1934.

13.1.2 In addition, Consultant shall comply with any legislative or federal rule pertaining to the nationwide public safety broadband network.

13.1.3 Consultant shall immediately notify the LA-RICS Authority if it becomes or expects to become noncompliant with any FCC or communications law applicable to this project.

13.2 FirstNet Compliance

Consultant acknowledges that (a) FirstNet was created by the Tax Relief Act; (b) one of the fundamental goals of the Tax Relief Act is to deploy and operate a nationwide interoperable public safety broadband network under the LA-RICS Authority of FirstNet; and (c) although the nationwide architecture for that network has not yet been established, and the technical standards for the network continue to evolve, the PSBN, at some point, is contemplated to be a part of that network. The Consultant shall (A) conform the PSBN or such other Work to the requirements of FirstNet; (B) provide all such assistance as is required by the LA-RICS Authority in order to respond to information requests of and/or coordinate with FirstNet; and (C) fully cooperate and assist the LA-RICS Authority and/or the FirstNet.

14. Instructions for Certification

14.1 Signature

By signing and submitting this document, including all Attachments hereto, the prospective recipient of Funding Resources is providing the certification as set out below.

14.2 Material Representation of Fact

The certification in this clause is a material representation of fact upon which reliance was placed when this transaction was entered into. If it is later determined that the prospective recipient of federal assistance funds knowingly rendered an erroneous certification, in addition to other remedies available to the Federal Government, the department or agency with which this transaction originated may pursue available remedies, including suspension and/or debarment.

14.3 Notification of Erroneous Certification

The prospective recipient of Funding Resources shall provide immediate written notice to the person or entity entering into the Agreement, if at any time the prospective recipient of federal assistance funds learns that its certification was erroneous, when submitted or has become erroneous by reason of changed circumstances.

14.4 Definitions and Coverage

The terms "covered transaction", "debarred", "suspended", "ineligible", "lower tier covered transaction", "participant", "person", "primary covered transaction", "principal", "proposal" and "voluntarily excluded", as used in this clause, have the meanings set out in the Definitions and Coverage sections of rules implementing Executive Orders 12459 and 12689.

14.5 Contracts with Other Entities

The prospective recipient of Funding Resources agrees by submitting the proposal that, should the proposed covered transaction be entered into, it shall not knowingly enter into any lower tier covered transaction with a person who is debarred, suspended, declared ineligible or voluntarily excluded from participation in this covered transaction, unless authorized by the department or agency with which this transaction originated.

14.6 Inclusion of Clause

The prospective recipient of Funding Resources further agrees by submitting the proposal that it will include the clause titled "Certification Regarding Debarment, Suspension, Ineligibility and Voluntary Exclusion – Lower Tier Covered Transactions", without modification, in all lower tier covered transactions and in all solicitations for lower tier covered transactions.

14.7 Lower Tiered Certification

A participant in a covered transaction may rely upon a certification of a prospective participant in a lower tier covered transaction that it is not debarred, suspended, ineligible or voluntarily excluded from the covered transaction, unless it knows that the certification is erroneous. A participant may decide the method and frequency by which it determines the eligibility of its principals. Each participant may, but is not required to, check the List of Parties Excluded from Procurement or Non-Procurement Programs.

14.8 Establishment of a System of Records

Nothing contained in the foregoing shall be construed to require establishment of a system of records in order to render in good faith the certification required by this clause. The knowledge and information of a participant is not required to exceed that which is normally possessed by a prudent person in the ordinary course of business dealings.

14.9 Available Remedies

Except for transactions authorized under Section 14.5 (Contracts with Other Entities) of these instructions, if a participant in a covered transaction knowingly enters into a lower tier covered transaction with a person who is suspended,

debarred, ineligible or voluntary excluded from participation in this transaction, in addition to other remedies available to the Federal Government, the department or agency with which this transaction originated may pursue available remedies, including suspension and/or debarment.

Attachment 4.1 – Certification Regarding Lobbying

Certification for Contracts, Grants, Loans Cooperative Agreements

The undersigned certifies, to the best of his or her knowledge and belief, that:

No federal appropriated funds have been paid or will be paid, by or on behalf of the undersigned, to any person for influencing or attempting to influence an officer or employee of an agency, a Member of Congress, an officer or employee of Congress, or an employee of a Member of Congress in connection with the awarding of any Federal contract, the making of any Federal grant, the making of any Federal loan, the entering into of any cooperative agreement, and the extension, continuation, renewal, amendment, or modification of any Federal contract, grant, loan or cooperative agreement.

If any funds other than federal appropriated funds have been paid or will be paid to any person for influencing or attempting to influence an officer or employee of any agency, a Member of Congress, an officer or employee of Congress, or an employee of a Member of Congress in connection with this Federal contract, grant, loan, or cooperative agreement, the undersigned shall complete and submit Standard Form-LLL "Disclosure Form to Report Lobbying" in accordance with its instructions.

The undersigned shall require that the language of this certification be included in the award documents for all sub-awards at all tiers (including subcontracts, sub-grants, and contracts under grants, loans, and cooperative agreements) and that all sub-recipients shall certify and disclose accordingly.

This certification is a material representation of fact upon which reliance was placed when this transaction was made or entered into. Submission of this certification is a prerequisite for making or entering into this transaction imposed by Section 1352 Title 31, U.S. Code. Any person who fails to file the required certification shall be subject to a civil penalty of not less than $10,000 and not more than $100,000 for each such failure.

Agreement Number:

Consultant/Borrower/Agency:

Name and Title of Authorized Representative:

_____ _____

Signature Date

Attachment 4.2 – Certification Regarding Drug Free Workplace Requirements

Consultant certifies that it will provide a drug-free workplace, in accordance with the California Drug Free Workplace Act of 1990 (Title 2 Govt. Code of State of California §§8351 et seq.) by:

Publishing a statement notifying employees that the unlawful manufacture, distribution, dispensing, possession or use of a controlled substance is prohibited in the Consultant's workplace and specifying the actions that will be taken against employees for violation of such prohibition.

Establishing a drug-free awareness program to inform employees about:

a. The dangers of drug abuse in the workplace;
b. Consultant's policy of maintaining a drug-free workplace;
c. Any available drug counseling, rehabilitation and employee assistance programs; and
d. The penalties that may be imposed upon employees for drug abuse violations occurring in the workplace.
e. Making it a requirement that each employee to be engaged in the performance of the LA-RICS Project be given a copy of the statement required by Section 1 above.
f. Notifying the employee in the statement required by Section 1 that, as a condition of employment under the LA-RICS Project, the employee will:
g. Abide by the terms of the statement, and
h. Notify Consultant of any criminal drug statute convictions for a violation occurring in the workplace no later than five days after such conviction.
i. Notifying the LA-RICS Authority within ten (10) days after receiving notice under Section 4.b from an employee or otherwise receiving actual notice of such conviction.
j. Taking one of the following actions, within thirty (30) days of receiving notice under Section 4.b with respect to any employee who is so convicted:
k. Taking appropriate personnel action against such an employee, up to and including termination.
l. Making a good faith effort to continue to maintain a drug-free workplace through implementation of the provision of this certification.

Agreement Number:

Consultant/Borrower/Agency:

Name and Title of Authorized Representative:

_____ _____

Signature Date

Form OCC/LW-1 (Rev. 6/04)

Attachment 4.3 – Certification Regarding Debarment, Suspension, Ineligibility and Voluntary Exclusion Lower Tier Covered Transactions

This certification is required by the regulations implementing Executive Orders 12459 and 12689, Debarment and Suspension, 24 CFR Part 24 Section 24.510, and 29 CFR Parts 97.35 and 98.510, Participants' responsibilities.

(Read Attached Instructions for Certification before Completing)

The prospective recipient of Funding Resources certifies that neither it nor its principals are presently debarred, suspended, proposed for debarment, declared ineligible, or voluntarily excluded from participation in this transaction by any federal department or agency.

Where the prospective recipient of Funding Resources is unable to certify to any of the statements in this certification, such prospective participant shall attach an explanation to this proposal.

Agreement Number:

Consultant/Borrower/Agency:

Name and Title of Authorized Representative:

_____ _____

Signature Date

Instructions for Certification Regarding Debarment, Suspension, Ineligibility and Voluntary Exclusion Lower Tier Covered Transactions

By signing and submitting this document, the prospective recipient of Funding Resources is providing the certification as set out below.

The certification in this clause is a material representation of fact upon which reliance was placed when this transaction was entered into. If it is later determined that the prospective recipient of Funding Resources knowingly rendered an erroneous certification, in addition to other remedies available to the Federal Government, the department or agency with which this transaction originated may pursue available remedies, including suspension and/or debarment.

The prospective recipient of Funding Resources shall provide immediate written notice to the person(s) with whom he enters into this agreement, if at any time the prospective recipient of Federal assistance funds learns that its certification was erroneous, when submitted or has become erroneous by reason of changed circumstances.

The terms "covered transaction", "debarred", "suspended", "ineligible", "lower tier covered transaction", "participant", "person", "primary covered transaction", "principal", "proposal" and "voluntarily excluded", as used in this clause, have the meanings set out in the Definitions and Coverage sections of rules implementing Executive Orders 12459 and 12689.

The prospective recipient of Funding Resources agrees by submitting this proposal that, should the proposed covered transaction be entered into, it shall not knowingly enter into any lower tier covered transaction with a person who is debarred, suspended, declared ineligible, or voluntarily excluded from participation in this covered transaction, unless authorized by the department or agency with which this transaction originated.

The prospective recipient of Funding Resources further agrees by submitting the proposal that it will include the clause titled "Certification Regarding Debarment, Suspension, Ineligibility and Voluntary Exclusion - Lower Tier Covered Transactions," without modification, in all lower tier covered transactions and in all solicitations for lower tier covered transactions.

A participant in a covered transaction may rely upon a certification of a prospective participant in a lower tier covered transaction that it is not debarred, suspended, ineligible, or voluntarily excluded from the covered transaction, unless it knows that the certification is erroneous. A participant may decide the method and frequency by which it determines the eligibility of its principals. Each participant may, but is not required to, check the List of Parties Excluded from Procurement or Non-Procurement Programs.

Nothing contained in the foregoing shall be construed to require establishment of a system of records in order to render in good faith the certification required by this clause. The knowledge and information of a participant is not required to exceed that which is normally possessed by a prudent person in the ordinary course of business dealings.

Except for transactions authorized under Section 5 of these instructions, if a participant in a covered transaction knowingly enters into a lower tier covered transaction with a person who is suspended, debarred, ineligible, or voluntary excluded from participation in this transaction, in addition to other remedies available to the Federal Government, the department or agency with which this transaction originated may pursue available remedies, including suspension and/or debarment.

Attachment 4.4 – Management Representation

As a prerequisite to receipt of a Funding Resources funded Agreement and as material facts upon which the LA-RICS Authority may rely in preparing the Agreement, I, an authorized representative of Consultant, make the following representations:

I am responsible for the fair presentation of Consultant's financial records/reports in conformity with Generally Accepted Accounting Principles (GAAP) and have provided such records/reports accordingly to the LA-RICS Authority. I will make available to the LA-RICS Authority all related data and information. I am not aware of any material transactions that have not been properly recorded and disclosed.

True ☐ False ☐

Consultant has adopted sound accounting policies and procedures in accordance with GAAP that include procedures for maintaining internal controls, and preventing and detecting fraud and abuse.

True ☐ False ☐

I have advised and will continue to advise the LA-RICS Authority of any actions taken at meetings of Consultant's Board of Directors and Committees of the Board of Directors which may have a material impact on Consultant's ability to perform the Agreement.

True ☐ False ☐

Except as recorded or disclosed to you herein, I know of no instances of:

Conflict of interests (direct or indirect), nepotism, related (direct or indirect) party transactions including revenues, expenses, loans, transfers, leasing arrangements, and guarantees, and amounts receivable from or payable to related parties.

True ☐ False ☐

Guarantees, whether written or oral, under which Consultant is contingently liable.

True ☐ False ☐

Actual, forthcoming or possible terminations of funding from regulatory agencies or other sources due to noncompliance, deficiencies or for any other reason, that would affect the financial records and/or continuing viability of Consultant as an on-going concern.

True ☐ False ☐

I have no knowledge that a board member/s is/are also an employee of this Consultant whose salary costs are reimbursed under this agreement.

True ☐ False ☐

I have no knowledge of and am not in receipt of any communication regarding allegations of fraud, suspected fraud or abuse affecting Consultant involving management, employees who have significant roles in internal control, or others where fraud/abuse could have a material effect on the financial records or performance of the Agreement.

True ☐ False ☐

I have no knowledge of any allegations, written or oral, of misstatements or misapplication of funds in the Consultant's conduct of its financial affairs or in its financial records.

True ☐ False ☐

I am not aware of any pending litigation, bankruptcy, judgment, liens and other significant issues that may threaten the financial viability, legal and continuing existence of Consultant.

True ☐ False ☐

Consultant has satisfactory title to all assets being used in the LA-RICS Project, and there are no liens or encumbrances on such assets, nor has any asset been pledged as collateral.

True ☐ False ☐

Consultant has complied with all aspects of contractual agreements, related laws and regulations that could have a material effect on the financial records, the program/s, or on the organization as a whole.

True ☐ False ☐

I have properly reported and paid to the appropriate governmental agencies all payroll taxes due on employees' (LA-RICS Project related or otherwise) compensation.

True ☐ False ☐

I have responded fully to all the LA-RICS Authority's inquiries related to Consultant's financial records and/or reports.

True ☐ False ☐

I understand that the LA-RICS Authority's auditing and monitoring procedures of Consultant are limited to those which the LA-RICS Authority determines best meet its informational needs and may not necessarily disclose all errors, irregularities, including fraud or defalcation or illegal acts that may exist.

True ☐ False ☐

I understand that the LA-RICS Authority's audit and monitoring reports are intended solely for use by Consultant and the other authorized parties, and are not intended for other purposes, unless otherwise required by law.

True ☐ False ☐

If one or more of the above statements is found to be false, I understand that the LA-RICS Authority may terminate this Agreement immediately. I also understand that I have a continuing duty to report to the LA-RICS Authority any material factual change to any of these statements.

True ☐ False ☐

Use this space to provide any additional information:

I declare under penalty of perjury that I have read the foregoing statements and they are true and complete to the best of my knowledge.

For (Name of Consultant): _____

_____

Signature

(Person Authorized by the Board of Directors to Bind Corporation)

_____

Printed Name

_____ _____

Title Date Signed

ATTACHMENT 5

Safely Surrendered *Baby Law*

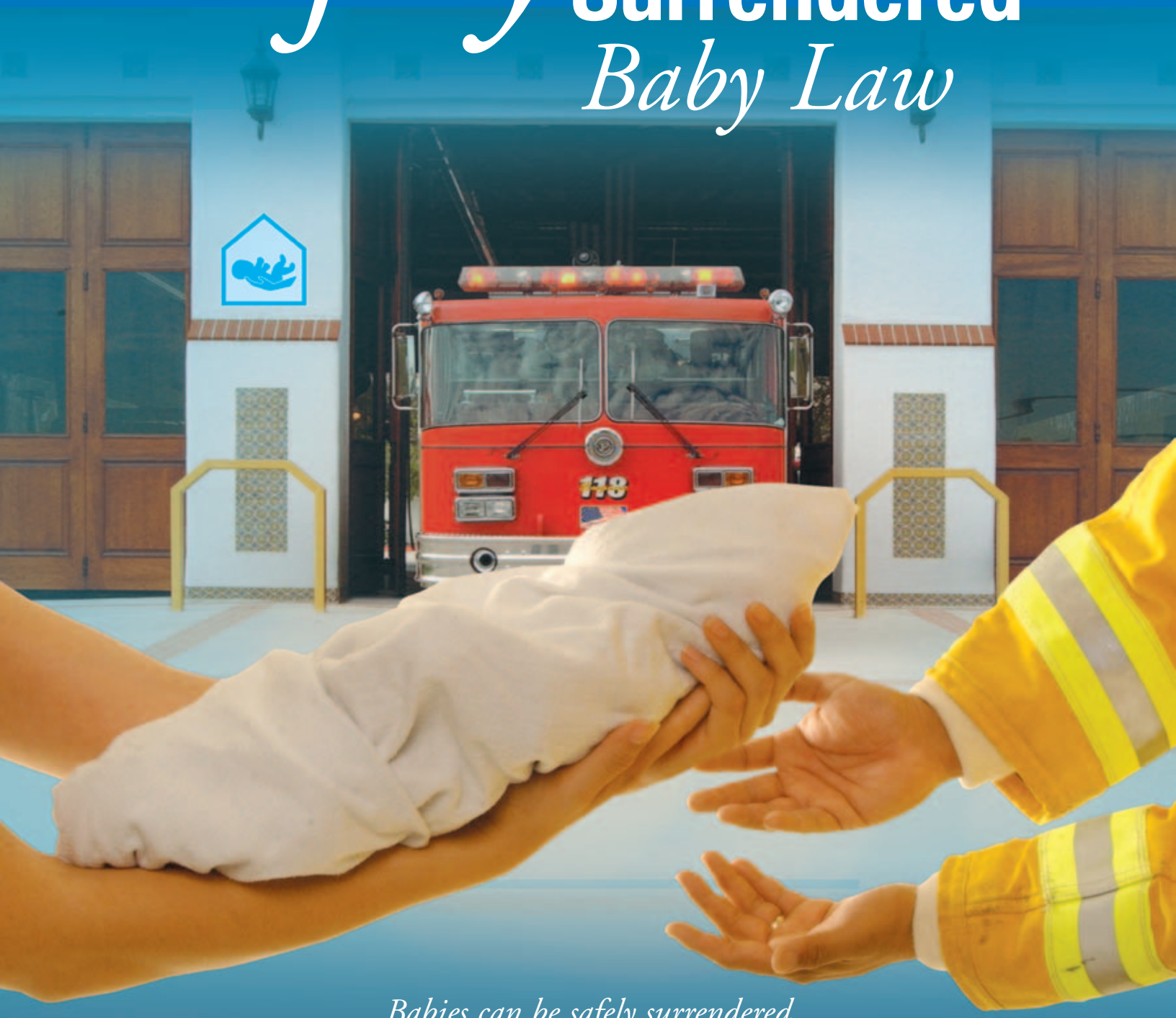

Babies can be safely surrendered
to staff at any hospital or fire station in Los Angeles County

No shame. No blame. No names.

In Los Angeles County: 1-877-BABY SAFE • 1-877-222-9723

www.babysafe.la.ca.us

AGENDA ITEM H - ENCLOSURE

In Los Angeles County: 1-877-BABY SAFE • 1-877-222-9723

www.babysafela.org

Safely Surrendered *Baby Law*

What is the Safely Surrendered Baby Law?

California's Safely Surrendered Baby Law allows parents or other persons, with lawful custody, which means anyone to whom the parent has given permission to confidentially surrender a baby. As long as the baby is three days (72 hours) of age or younger and has not been abused or neglected, the baby may be surrendered without fear of arrest or prosecution.

Every baby deserves a chance for a healthy life. If someone you know is considering abandoning a baby, let her know there are other options. For three days (72 hours) after birth, a baby can be surrendered to staff at any hospital or fire station in Los Angeles County.

How does it work?

A distressed parent who is unable or unwilling to care for a baby can legally, confidentially, and safely surrender a baby within three days (72 hours) of birth. The baby must be handed to an employee at a hospital or fire station in Los Angeles County. As long as the baby shows no sign of abuse or neglect, no name or other information is required. In case the parent changes his or her mind at a later date and wants the baby back, staff will use bracelets to help connect them to each other. One bracelet will be placed on the baby, and a matching bracelet will be given to the parent or other surrendering adult.

What if a parent wants the baby back?

Parents who change their minds can begin the process of reclaiming their baby within 14 days. These parents should call the Los Angeles County Department of Children and Family Services at **1-800-540-4000**.

Can only a parent bring in the baby?

No. While in most cases a parent will bring in the baby, the Law allows other people to bring in the baby if they have lawful custody.

Does the parent or surrendering adult have to call before bringing in the baby?

No. A parent or surrendering adult can bring in a baby anytime, 24 hours a day, 7 days a week, as long as the parent or surrendering adult surrenders the baby to someone who works at the hospital or fire station.

Does the parent or surrendering adult have to tell anything to the people taking the baby?

No. However, hospital or fire station personnel will ask the surrendering party to fill out a questionnaire designed to gather important medical history information, which is very useful in caring for the baby. The questionnaire includes a stamped return envelope and can be sent in at a later time.

What happens to the baby?

The baby will be examined and given medical treatment. Upon release from the hospital, social workers immediately place the baby in a safe and loving home and begin the adoption process.

What happens to the parent or surrendering adult?

Once the parent or surrendering adult surrenders the baby to hospital or fire station personnel, they may leave at any time.

Why is California doing this?

The purpose of the **Safely Surrendered Baby Law** is to protect babies from being abandoned, hurt or killed by their parents. You may have heard tragic stories of babies left in dumpsters or public bathrooms. Their parents may have been under severe emotional distress. The mothers may have hidden their pregnancies, fearful of what would happen if their families found out. Because they were afraid and had no one or nowhere to turn for help, they abandoned their babies. Abandoning a baby is illegal and places the baby in extreme danger. Too often, it results in the baby's death. The **Safely Surrendered Baby Law** prevents this tragedy from ever happening again in California.

A baby's story

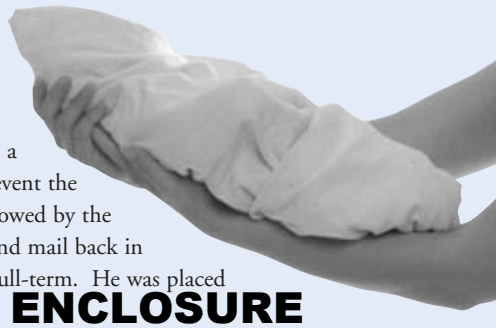

Early in the morning on April 9, 2005, a healthy baby boy was safely surrendered to nurses at Harbor-UCLA Medical Center. The woman who brought the baby to the hospital identified herself as the baby's aunt and stated the baby's mother had asked her to bring the baby to the hospital on her behalf. The aunt was given a bracelet with a number matching the anklet placed on the baby; this would provide some identification in the event the mother changed her mind about surrendering the baby and wished to reclaim the baby in the 14-day period allowed by the Law. The aunt was also provided with a medical questionnaire and said she would have the mother complete and mail back in the stamped return envelope provided. The baby was examined by medical staff and pronounced healthy and full-term. He was placed with a loving family that had been approved to adopt him by the Department of Children and Family Services.

Ley de Entrega de Bebés *Sin Peligro*

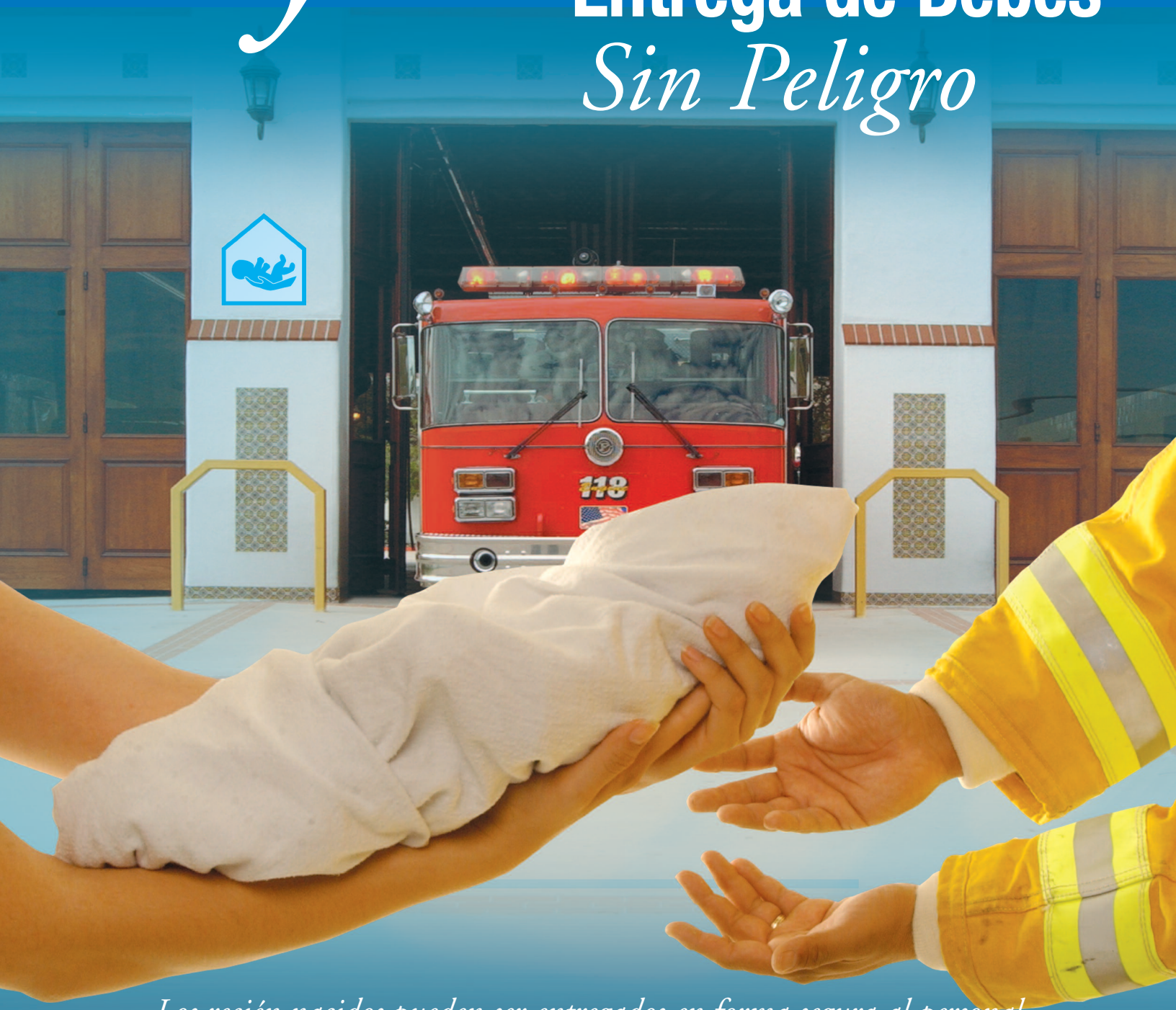

Los recién nacidos pueden ser entregados en forma segura al personal de cualquier hospital o cuartel de bomberos del Condado de Los Ángeles

Sin pena. Sin culpa. Sin nombres.

En el Condado de Los Ángeles: 1-877-BABY SAFE • 1-877-222-9723

www.lababysafe.com

En el Condado de Los Ángeles: 1-877-BABY SAFE • 1-877-222-9723

www.babysafela.org

Ley de Entrega de Bebés *Sin Peligro*

¿Qué es la Ley de Entrega de Bebés sin Peligro?

La Ley de Entrega de Bebés sin Peligro de California permite la entrega confidencial de un recién nacido por parte de sus padres u otras personas con custodia legal, es decir cualquier persona a quien los padres le hayan dado permiso. Siempre que el bebé tenga tres días (72 horas) de vida o menos, y no haya sufrido abuso ni negligencia, pueden entregar al recién nacido sin temor de ser arrestados o procesados.

Cada recién nacido se merece la oportunidad de tener una vida saludable. Si alguien que usted conoce está pensando en abandonar a un recién nacido, infórmele que tiene otras opciones. Hasta tres días (72 horas) después del nacimiento, se puede entregar un recién nacido al personal de cualquier hospital o cuartel de bomberos del condado de Los Angeles.

¿Cómo funciona?

El padre/madre con dificultades que no pueda o no quiera cuidar de su recién nacido puede entregarlo en forma legal, confidencial y segura dentro de los tres días (72 horas) del nacimiento. El bebé debe ser entregado a un empleado de cualquier hospital o cuartel de bomberos del Condado de Los Ángeles. Siempre que el bebé no presente signos de abuso o negligencia, no será necesario suministrar nombres ni información alguna. Si el padre/madre cambia de opinión posteriormente y desea recuperar a su bebé, los trabajadores utilizarán brazaletes para poder vincularlos. El bebé llevará un brazalete y el padre/madre o el adulto que lo entregue recibirá un brazalete igual.

¿Qué pasa si el padre/madre desea recuperar a su bebé?

Los padres que cambien de opinión pueden comenzar el proceso de reclamar a su recién nacido dentro de los 14 días. Estos padres deberán llamar al Departamento de Servicios para Niños y Familias (Department of Children and Family Services) del Condado de Los Ángeles al **1-800-540-4000**.

¿Sólo los padres podrán llevar al recién nacido?

No. Si bien en la mayoría de los casos son los padres los que llevan al bebé, la ley permite que otras personas lo hagan *si tienen custodia legal.*

¿Los padres o el adulto que entrega al bebé deben llamar antes de llevar al bebé?

No. El padre/madre o adulto puede llevar al bebé en cualquier momento, las 24 horas del día, los 7 días de la semana, siempre y cuando entreguen a su bebé a un empleado del hospital o cuartel de bomberos.

¿Es necesario que el padre/madre o adulto diga algo a las personas que reciben al bebé?

No. Sin embargo, el personal del hospital o cuartel de bomberos le pedirá a la persona que entregue al bebé que llene un cuestionario con la finalidad de recabar antecedentes médicos importantes, que resultan de gran utilidad para cuidar bien del bebé. El cuestionario incluye un sobre con el sello postal pagado para enviarlo en otro momento.

¿Qué pasará con el bebé?

El bebé será examinado y le brindarán atención médica. Cuando le den el alta del hospital, los trabajadores sociales inmediatamente ubicarán al bebé en un hogar seguro donde estará bien atendido, y se comenzará el proceso de adopción.

¿Qué pasará con el padre/madre o adulto que entregue al bebé?

Una vez que los padres o adulto hayan entregado al bebé al personal del hospital o cuartel de bomberos, pueden irse en cualquier momento.

¿Por qué se está haciendo esto en California? ?

La finalidad de la **Ley de Entrega de Bebés sin Peligro** es proteger a los bebés para que no sean abandonados, lastimados o muertos por sus padres. Usted probablemente haya escuchado historias trágicas sobre bebés abandonados en basureros o en baños públicos. Los padres de esos bebés probablemente hayan estado pasando por dificultades emocionales graves. Las madres pueden haber ocultado su embarazo, por temor a lo que pasaría si sus familias se enteraran. Abandonaron a sus bebés porque tenían miedo y no tenían nadie a quien pedir ayuda. El abandono de un recién nacido es ilegal y pone al bebé en una situación de peligro extremo. Muy a menudo el abandono provoca la muerte del bebé. La **Ley de Entrega de Bebés sin Peligro** impide que vuelva a suceder esta tragedia en California.

Historia de un bebé

A la mañana temprano del día 9 de abril de 2005, se entregó un recién nacido saludable a las enfermeras del Harbor-UCLA Medical Center. La mujer que llevó el recién nacido al hospital se dio a conocer como la tía del bebé, y dijo que la madre le había pedido que llevara al bebé al hospital en su nombre. Le entregaron a la tía un brazalete con un número que coincidía con la pulsera del bebé; esto serviría como identificación en caso de que la madre cambiara de opinión con respecto a la entrega del bebé y decidiera recuperarlo dentro del período de 14 días que permite esta ley. También le dieron a la tía un cuestionario médico, y ella dijo que la madre lo llenaría y lo enviaría de vuelta dentro del sobre con franqueo pagado que le habían dado. El personal médico examinó al bebé y se determinó que estaba saludable y a término. El bebé fue ubicado con una buena familia que ya había sido aprobada para adop[illegible]

LA-RICS

LOS ANGELES REGIONAL INTEROPERABLE COMMUNICATIONS SYSTEM AUTHORITY

2525 Corporate Place, Suite 100
Monterey Park, California 91754
Telephone: (323) 881-8291
http://www.la-rics.org

SCOTT EDSON
EXECUTIVE DIRECTOR

October 4, 2018

LA-RICS Board of Directors
Los Angeles Regional Interoperable Communications System Authority (the "Authority")

Dear Directors:

APPROVE AMENDMENT NO. 32 FOR AGREEMENT NO. LA-RICS 008 FOR LOS ANGELES REGIONAL INTEROPERABLE COMMUNICATIONS SYSTEM PUBLIC SAFETY BROADBAND NETWORK

SUBJECT

Board approval is requested to authorize the Executive Director to execute Amendment No. 32 to extend the term of Agreement No. LA-RICS 008 for the Public Safety Broadband Network (PSBN) for thirty (30) days until November 30, 2018, at no cost.

RECOMMENDED ACTIONS

It is recommended that your Board:

1. Approve Amendment No. 32 to Agreement No. LA-RICS 008 for the PSBN with Motorola Solutions, Inc. (Motorola), in substantially similar form to the (Enclosure), which extends the Term of the Agreement for an additional thirty (30) days from November 1, 2018, until November 30, 2018, unless sooner terminated or extended in whole or in part, at no cost.

2. Delegate Authority to the Executive Director to execute an amendment to extend the term for an additional thirty (30) days, at no cost, should the need exist, to allow for the finalization of scope for the PSBN Round 2 buildout, provided such amendment is approved as to form by Counsel to the Authority.

3. Delegate Authority to the Executive Director to execute Amendment No. 32, in substantially similar form to the enclosed Amendment.

AGENDA ITEM I

BACKGROUND

On December 14, 2017, your Board authorized the Authority to enter into an Asset Transfer Agreement with AT&T Corp. (AT&T) to transfer and assign its 20% right, title, and interest in the initial Broadband Technologies Opportunity Program (BTOP) grant funded buildout of the LA-RICS PSBN for inclusion into the First Responder Network Authority (FirstNet) National Public Safety Broadband Network (NPSBN). This Agreement required, among other things, the Authority continue with the PSBN buildout contemplated in the PSBN Round 2 Project Implementation Plan (PIP) under Objective 1 (Coverage Augmentation) and requires the National Telecommunications and Information Administration (NTIA) and National Oceanic and Atmospheric Administration (NOAA) to approve the PSBN Round 2 PIP.

On February 15, 2018, the Authority submitted the PSBN Round 2 PIP to NTIA and NOAA for consideration.

On June 25, 2018, NTIA and NOAA approved Objective 1 (Coverage Augmentation) and Objective 2 (Rapid Response Vehicles) contemplated in the PSBN Round 2 PIP. The Authority continues to work with Motorola to finalize the terms associated with certain work related to the PSBN Round 2 buildout. Amendment No. 32 is being presented to your Board to allow for the terms of this work to be finalized.

PURPOSE/JUSTIFICATION OF RECOMMENDED ACTION

Approval of the recommended actions will authorize the Executive Director to execute Amendment No. 32 to extend the Term of Agreement with Motorola until November 30, 2018, at no cost.

The Authority intends to have Motorola build out the PSBN Round 2 sites that are located at Land Mobile Radio (LMR) System sites. However, some of these LMR sites are still in the design and/or construction phase. It is necessary to extend the Term of the PSBN Agreement for an additional thirty (30) days, to allow the Authority and Motorola to finalize the scope and cost for the PSBN Round 2 work that will occur at the LMR collocation sites.

FISCAL IMPACT/FINANCING

There is no fiscal impact for the recommended actions.

FACTS AND PROVISIONS/LEGAL REQUIREMENT

The Authority's counsel has reviewed the recommended actions.

CONCLUSION

Upon the Board's approval of the recommended action, on behalf of the Authority, the Executive Director will have authority to execute Amendment No. 32 with Motorola, substantially similar in form to the enclosed.

Respectfully submitted,

SCOTT EDSON
EXECUTIVE DIRECTOR

JA:rf:pl
M:\MOTOROLA (LA-RICS 008)\2. Amendments\Amendment 32 (DRAFT)\LTE Amendment 32_ Board Letter_09-27-18.docx

Enclosure

cc: Counsel to the Authority

AMENDMENT NUMBER THIRTY-TWO

TO AGREEMENT NO. LA-RICS 008
FOR
LOS ANGELES REGIONAL INTEROPERABLE COMMUNICATIONS SYSTEM – PUBLIC SAFETY BROADBAND NETWORK

Recitals

This Amendment Number Thirty (together with all exhibits, attachments, and schedules hereto, ("Amendment No. 32") is entered into by and between the Los Angeles Regional Interoperable Communications System Authority ("Authority") and Motorola Solutions, Inc. ("Contractor"), effective as of October _____, 2018, based on the following recitals:

WHEREAS, Authority and Contractor have entered into that certain Agreement No. LA-RICS 008 for Los Angeles Regional Interoperable Communications System ("LA-RICS") – Public Safety Broadband Network (PSBN), dated as of March 6, 2014 (together with all exhibits, attachments, and schedules thereto, all as amended prior to the date hereof, the "Agreement").

WHEREAS, the Agreement has been previously amended by Amendment Number One, effective as of March 6, 2014, to exercise the Unilateral Option for all Work pertaining to Phase 1.

WHEREAS, the Agreement has been previously amended by Amendment Number Two, effective April 7, 2014, to (a) make changes necessary to reflect the Authority's exercise of the Unilateral Option for all Work pertaining to Phase 1 for Additive Alternate No. 1, System Design Work for the Home Subscriber Server ("HSS"), and all Work pertaining to Phase 1 for Additive Alternate No. 2, System Design Work for the Redundant Evolved Packet Core ("EPC"), and (b) to make other changes as reflected in Amendment No. 2.

WHEREAS, the Agreement has been previously amended by Amendment Number Three, effective June 20, 2014, to exercise the Unilateral Option for all Work pertaining to Phase 2, Site Construction and Site Modification, and Phase 3, Supply PSBN Components.

WHEREAS, the Agreement has been previously amended by Amendment Number Four, effective July 16, 2014, to exercise the Unilateral Option for all Work pertaining to (i) Phase 2 for Additive Alternate No. 1, Site Construction and Site Modification for the HSS, (ii) Phase 3 for Additive Alternate No. 1, Supply PSBN Components Work for the HSS, (iii) Phase 2 for Additive Alternate No. 2, Site Construction and Site Modification Work for the Redundant EPC, and (iv) Phase 3 for Additive Alternate No. 2, Supply PSBN Components Work for the Redundant EPC.

WHEREAS, the Agreement has been previously amended by Amendment Number Five, effective September 24, 2014, to exercise the Unilateral Option for all Work

pertaining to Phase 4, PSBN Implementation, including Phase 4 Work for Additive Alternate 1 (Home Subscriber Server) and Additive Alternate 2 (Redundant Evolved Packet Core), to install, optimize, test, commission, and deploy all or such portion of the PSBN as authorized by the Authority via notices to proceed, and to make other certain changes as reflected in Amendment No. 5.

WHEREAS, the Agreement has been previously amended by Amendment Number Six, effective October 3, 2014, to (a) make changes necessary to reflect the removal of three (3) PSBN Sites and all the Work and equipment associated with these PSBN Sites; (b) to make the changes necessary to reflect the replacement of undisguised antenna support structures to disguised antenna support structures at 32 PSBN Sites and all of the Work and equipment affected by these replacements; (c) to make other certain changes; and (d) to increase the Maximum Contract Sum by $2,613,300 from $175,583,275 to $178,196,575.

WHEREAS, the Agreement has been previously amended by Amendment Number Seven, effective December 31, 2014, to (a) make changes necessary to reflect the replacement of undisguised antenna support structures with various types of antenna support structures at eight PSBN Sites and all of the Work and equipment affected by these replacements; (b) reconcile hose tower designs for 28 sites in Phase 2; and (c) to make other certain changes as reflected in Amendment No. 7.

WHEREAS, the Agreement has been previously amended by Amendment Number Eight, effective February 13, 2015, to (a) make changes necessary to reflect the removal of thirty-six (36) PSBN Sites and all the Work and equipment associated with the removal of these sites (b) make changes necessary to reflect the addition of six (6) PSBN Sites and all the Work and equipment associated with the addition of these sites and exercise the Unilateral Options for all Work pertaining to Phase 1 (System Design), Phase 2 (Site Construction and Site Modification), Phase 3 (Supply PSBN Components), and Phase 4 (PSBN Implementation) for these six (6) PSBN Sites; (c) reconcile hose tower installation and associated foundation costs for twenty-eight (28) PSBN Sites in Phase 2; (d) to reduce the Maximum Contract Sum by $11,941,896 from $178,196,575 to $166,254,679; and (d) to make other certain changes reflected in Amendment No. 8.

WHEREAS, the Agreement has been previously amended by Amendment Number Nine, effective March 23, 2015, to (a) make changes necessary to reflect the removal of twenty-four (24) PSBN Sites and all the Work and equipment associated with the removal of these sites; (b) make changes necessary to reflect the addition of six (6) PSBN Sites and all the Work and equipment associated with the addition of these sites and exercise the Unilateral Options for all Work pertaining to Phase 1 (System Design), Phase 2 (Site Construction and Site Modification), Phase 3 (Supply PSBN Components), and Phase 4 (PSBN Implementation) for these six (6) PSBN Sites; (c) make changes necessary to reflect Phase 1 Work, site design visit for one (1) potential PSBN System Site; (d) to reduce the Maximum Contract Sum by $7,324,405 from $166,254,679 to $158,930,274; and (e) to make certain other changes reflected in Amendment No. 9.

WHEREAS, the Agreement was previously amended by Amendment Number Ten, effective June 25, 2015, to (a) make changes necessary to remedy certain miscalculations reflected in Amendment No. 9 resulting in a reduction in the amount by $280,622; (b) make changes necessary to reflect the inclusion of Phase 1 (System Design) Work for fifteen (15) Cell-on-Wheels (COWs) as set forth in Exhibit C (Schedule of Payments) attached to Amendment No. 10, and exercise the Unilateral Option for all Work Pertaining to Phase 1 (System Design) for the COWs in the amount of $411,981; (c) make changes necessary to reflect construction restoration Work for thirty (30) PSBN Sites to return the sites to preconstruction conditions in the amount of $2,321,257; (d) make changes necessary to reflect the inclusion of fiber optic equipment and related Work for the County of Los Angeles and the City of Los Angeles to allow for interconnectivity among the agencies and the PSBN in the amount of $1,275,000; (e) to increase the Maximum Contract Sum by $3,727,616 ($4,008,238 - $280,622) from $158,930,274 to $162,657,890; and (f) to make certain other changes as set forth in Amendment No. 10.

WHEREAS, the Agreement was previously amended by Amendment Number Eleven, effective July 16, 2015, to (a) make changes necessary to reflect the inclusion of one (1) PSBN Site and all Work and equipment associated with the addition of this site in the amount of $336,081 as set forth in Exhibit C (Schedule of Payments) attached to this Amendment No. 11; (b) make changes necessary to reflect the inclusion of Phase 2 (Site Construction and Site Modification), Phase 3 (Supply PSBN Components), and Phase 4 (PSBN Implementation) Work for fifteen (15) COWs in the amount of $3,244,880 as set forth in Exhibit C (Schedule of Payments) attached to this Amendment No. 11; (c) exercise the Unilateral Options for all Work Pertaining to Phase 1 (System Design) for one (1) PSBN Site (PASDNPD) and Phase 2 (Site Construction and Site Modification), Phase 3 (Supply PSBN Components), and Phase 4 (PSBN Implementation) for the one (1) PSBN Site and the fifteen (15) COWs; and (d) to increase the Maximum Contract Sum by $3,580,961 from $162,657,890 to $166,238,851. The parties acknowledged that the Maximum Contract Sum would be adjusted down accordingly in future amendments reducing the scope of the PSBN Project.

WHEREAS, the Agreement was previously amended by Amendment Number Twelve, effective August 13, 2015, to (a) account for the removal of forty-two (42) sites from the scope of the PBSN; (b) make changes necessary to reflect the removal of tower foundations from seven (7) PSBN Sites as part of construction restoration Work to return the sites to preconstruction conditions in the amount of $37,607; (c) make changes necessary to include construction restoration Work for one (1) PSBN Site (LASDCVS) to return the site to preconstruction conditions in the amount of $19,800; (d) make changes necessary to reflect the inclusion and purchase of 5,000 Universal Integrated Circuit Cards (UICC) in the amount of $245,000; (e) make changes necessary to reflect the inclusion and purchase of five (5) CISCO routers and five (5) corresponding units of data service in the amount of $17,500; (f) make changes necessary to reflect site construction changes in the amount of $150,740 (g) make changes necessary to remedy certain miscalculations in cost in the amount of $165,422; (h) make the changes necessary to reflect a cost reduction for forty-two (42) terminated PSBN Sites in the amount of $12,989,223; (i) resulting in a reduction in the Maximum Contract Sum by $12,353,154

($12,989,223 – $636,069 when taking the above cost increases into consideration) from $166,238,851 to $153,885,697; and (j) to make other certain changes as set forth in Amendment No. 12.

WHEREAS, the Agreement was previously amended by Amendment Number Thirteen, effective September 4, 2015, to (a) account for the removal of seventy-seven (77) PSBN Sites from the scope of the PBSN; (b) account for the replacement of one (1) PSBN Site (LAPP001 replacing LAFD049) and the equipment and Work associated with the replacement of this site with an increased amount of $404,053; (c) reconcile microwave equipment to align with the final backhaul design with an increased amount of $813,381; (d) identify equipment for PSBN Sites that have since been dropped from the PSBN design where such equipment had already been ordered, manufactured and/or delivered and installed with an increased amount of $10,727,207; (e) make changes necessary to reflect site construction changes with an increased amount of $482,923; (f) make changes necessary to remedy certain miscalculations resulting in a cost reduction of $25,854; (g) make changes necessary to reflect various site reconciliations and corresponding adjustments resulting in a cost reduction of $6,304,207; (h) make changes necessary to reflect a cost reduction for seventy-seven (77) terminated PSBN Sites in the amount of $30,511,394; (i) all actions decreasing the Maximum Contract Sum by $24,413,891 ($36,841,455 – $12,427,564 when taking the above cost increases and reductions into consideration) from $153,885,697 to $129,471,804; and (j) to make other certain changes as set forth in Amendment No. 13.

WHEREAS, the Agreement was previously amended by Amendment Number Fourteen, effective October 9, 2015, to (a) reconcile spare equipment required for the continued operation and support of the PSBN for an increased amount of $1,214,021; (b) reconcile equipment necessary for the fifteen (15) Cell-On-Wheels (COWs) for an increased amount of $2,157,669; (c) make changes necessary to reflect site construction changes for an increased amount of $80,220; (d) reconcile excess equipment for a decreased amount of $24,229; and (e) all actions increasing the Maximum Contract Sum by $3,427,681 ($1,214,021 + $2,157,669 + $80,220 - $24,229) from $129,471,804 to $132,899,485; and (e) to make other certain changes as set forth in the Amendment No. 14.

WHEREAS, the Agreement was previously amended by Amendment Number Fifteen, effective December 21, 2015, to settle the Contractor Claims, including the dispute over the project management fees and any and all other claims for additional compensation above the current Maximum Contract Sum that Contractor or its subcontractors may have against the Authority relating to any Work that has been performed or is required to be performed under the PSBN Agreement, increasing the Maximum Contract Sum by $10,685,472 from $132,899,485 to $143,584,957.

WHEREAS, the Agreement was previously amended by Amendment Number Sixteen, effective March 15, 2016, to include all Work related to additional Radio Frequency (RF) Emissions testing at twelve (12) PSBN Sites increasing the Maximum Contract Sum by $3,300 from $143,584,957 to $143,588,257.

WHEREAS, the Agreement was previously amended by Amendment Number Seventeen, effective May 4, 2016, to make the changes necessary to reflect the termination of Waterway Coverage Testing, Freeway Coverage Testing, Special Operational Testing, and PSBN Burn-In Testing, which decreased the Maximum Contract Sum by $931,936, from $143,588,257 to $142,656,321.

WHEREAS, the Agreement was previously amended by Amendment Number Eighteen, effective August 31, 2016, to make changes necessary to (a) extend the Warranty Period until December 31, 2016, at no additional cost; (b) reflect the reconciliation of excess equipment for a decreased amount of $600,502; (c) reflect the reconciliation of spare equipment for a decreased amount of $768,027, (d) make changes necessary to reconcile the cost of LASDCVS to reflect costs for that were inadvertently omitted for construction Work performed that was not included as part of restoration and has not been paid to date for an increased amount of $62,969, (e) make changes necessary to correct certain administrative errors for an increased amount of $25,964; (f) to make other certain changes as set forth in the Amendment No. 18; and (g) decrease the Maximum Contract Sum by $1,279,596, [(-$600,502) + (-$768,027) + $62,969 + $25,964)], when taking the above cost increases and reductions into consideration from $142,656,321 to $141,376,725.

WHEREAS, the Agreement was previously amended by Amendment Number Nineteen, effective December 21, 2016, to make changes necessary to (a) extend the Warranty Period until March 31, 2017, at no additional cost; (b) make changes necessary to upgrade the Authority's Deployable Vehicle (System on Wheels), which includes the requisite services, equipment, material, configuration, installation, provide backup power, antenna storage and mounts, fiber connectivity and backhaul services, and related Work to support Special Events for an increase in the amount of $235,768; (c) reflect a reduction in Training as certain Training courses will not be provided to the Authority for a decrease in the amount of $200,000; (d) reflect a reduction in Wide Area Coverage Testing as it is no longer necessary for a decrease in the amount of $2,153,150; (e) reflect Optimization Work necessary to account for extended Optimization efforts for an increase in the amount of $550,000; (f) to make other certain changes as set forth in this Amendment No. 19; and (g) decreasing the Maximum Contract Sum by $1,567,382 ($235,768 - $200,000 - $2,153,150 + $550,000), when taking the cost increases and decreases into consideration, from $141,376,725 to $139,809,343.

WHEREAS, the Agreement was previously amended by Amendment Number Twenty, effective March 20, 2017, to make changes necessary to (a) reflect the relocation of certain equipment (towers, generator fuel tanks, tower hardware, etc.) from the Southern California Edison (SCE) Mesa Substation site to the County of Los Angeles Fire Departments Del Valle Training Facility as the original storage site is no lo longer available after April 15, 2017, for an increase in the amount of $208,338; (b) make other certain changes as set forth in Amendment No. 20; and (c) increase the Maximum Contract Sum by $208,338 from $139,809,343 to $140,017,681.

WHEREAS, the Agreement was previously amended by Amendment Number Twenty-One, effective March 20, 2017, to make changes necessary to (a) extend the

Warranty Period on a month-to-month basis, at no additional cost; (b) with the first month commencing on April 1, 2017, and expiring on April 30, 2017; and (c) agree and acknowledge that subsequent month-to-month Warranty Period extensions, if any, will be mutually agreed upon by both parties.

WHEREAS, the Agreement was previously amended by Amendment Number Twenty-Two, effective April 13, 2017, to make changes necessary to (a) revise Exhibit A (Statement of Work) to allow the Contractor to create Access Point Names (APNs) for the Authority's member agencies at a cost of $977 per member agency, with a minimum of four (4) agencies to be deployed at a time, for a cost increase in the amount of $3,908; (b) increasing the Maximum Contract Sum by $3,908 from $140,017,681 to $140,021,589; and (c) make other certain changes as set forth in Amendment No. 22.

WHEREAS, the Agreement was previously amended by Amendment Number Twenty-Three, effective April 13, 2017, to (a) make changes necessary to extend the Warranty Period until May 31, 2017, at no additional cost; and (b) make other certain changes as set forth in Amendment No. 23.

WHEREAS, the Agreement was previously amended by Amendment Number Twenty-Four, effective May 18, 2017, to make changes necessary to (a) extend the Initial Term of the Agreement by exercising the first one-year Option Term for Maintenance Work under Phase 5 (PSBN Maintenance), commencing on June 1, 2017 and expiring on May 31, 2018, unless sooner terminated or extended, in whole or in part, in the amount of $2,991,000 resulting in a cost decrease in the amount of $2,964,683, when taking the currently contemplated first year Maintenance cost of $5,955,683 into consideration; (b) exercise the Unilateral Option for the first one-year Option Term for Maintenance Work under Phase 5 (PSBN Maintenance); (c) revise Exhibit A (Statement of Work) to increase the scope of PSEN Work to allow the Contractor to assist the Authority with connecting its member agencies to the PSBN for a not-to-exceed cost increase in the amount of $275,000; (d) decrease the Maximum Contract Sum by $2,689,683 from $140,021,589 to $137,331,906 when taking the cost increases and decreases into consideration; and (e) make other certain changes as set forth in Amendment No. 24.

WHEREAS, the Agreement was previously amended by Amendment Number Twenty-Five, effective October 19, 2017, to make changes necessary to (a) revise Exhibit A (Statement of Work) and Exhibit B (PSBN Specifications) to reflect a reduction in the scope of certain Work related to Network Management System and Inventory Management System and a corresponding reduction in the cost in the amount of $316,767; (b) reflect a reduction in the scope of certain Work related to Documentation and a corresponding reduction in the cost in the amount of $68,515; (c) reflect a reduction in the scope of certain Work related to Additive Alternate No. 2 (Redundant Evolved Packet Core [EPC]) and a corresponding reduction in the cost in the amount of $1,061,704; (d) reflect the removal of the scope of all Work related to Additive Alternate No. 3 (Location Services) and a corresponding reduction in the cost in the amount of $2,592,246; (e) reflect a reduction in the scope of certain Work related to Cell on Wheels (COWs) and a corresponding reduction in the cost in the amount of $129,977; (f) reflect

a reduction in the scope of certain Work related to Site Construction Changes and a corresponding reduction in the cost in the amount of $14,046; (g) decrease the Maximum Contract Sum by $4,183,255 from $137,331,906 to $133,148,651 when taking the cost decreases into consideration; and (h) make other certain changes as set forth in Amendment No. 25.

WHEREAS, the Agreement was previously amended by Amendment Number Twenty-Six, effective November 21, 2017, to make changes necessary to (a) reflect an increase and decrease in the scope of certain Work related to a certain Cell on Wheels (COWs) site (CHPNWHLL) resulting in a net increase in the cost in the amount of $97,220; (b) reflect a reduction in the scope of certain Work related to Site Construction Changes and a corresponding reduction in the cost in the amount of $33,674; (c) increase the Maximum Contract Sum by $63,546 from $133,148,651 to $133,212,197 when taking the cost increases and decreases into consideration; and (d) make other certain changes in Amendment No. 26

WHEREAS, the Agreement was previously amended by Amendment Number Twenty-Seven, effective May 17, 2018, to make changes necessary to (a) extend the Initial Term of the Agreement by extending the first Option Term for Maintenance Work under Phase 5 (PSBN Maintenance) for an additional month, commencing on June 1, 2018 and expiring on June 30, 2018, unless sooner terminated or extended, in whole or in part, in the amount of $195,306; (b) increase the Maximum Contract Sum by $195,306 from $133,212,197 to $133,407,503 when taking the cost increase into consideration; and (c) make other certain changes as set forth in Amendment No. 27.

WHEREAS, the Agreement was previously amended by Amendment Number Twenty-Eight, effective June 27, 2018, to make changes necessary to (a) extend the Initial Term of the Agreement for an additional month, commencing on July 1, 2018 and expiring on July 31, 2018, unless sooner terminated or extended, in whole or in part; at no cost, with no obligation to Contractor to perform Maintenance Work or Services (b) make other certain changes as set forth in Amendment No. 28.

WHEREAS, the Agreement was previously amended by Amendment Number Twenty-Nine, effective July 26, 2018, to make changes necessary to (a) reflect a decrease in the scope of certain Work related to training for the Cell on Wheels (COWs) resulting in a net decrease in the cost in the amount of $13,000; (b) reflect the removal of Phase 4 (PSBN Implementation) Work for a certain COW site (SCEMESA) and a corresponding reduction in the cost in the amount of $8,345; (c) decrease the Maximum Contract Sum by $21,345 from $133,407,503 to $133,386,158 when taking the cost decreases into consideration; and (d) make other certain changes as set forth in Amendment No. 29.

WHEREAS, the Agreement was previously amended by Amendment Number Thirty, effective July 31, 2018, to make changes necessary to (a) extend the Initial Term of the Agreement for an additional sixty (60) days commencing on August 1, 2018, and expiring on September 30, 2018, unless sooner terminated or extended, in whole or in

part; at no cost, with no obligation to Contractor to perform Maintenance Work or Services; and (b) make other certain changes as set forth in Amendment No. 30.

WHEREAS, the Agreement was previously amended by Amendment Number Thirty-One, effective September 25, 2018, to make changes necessary to (a) extend the Initial Term of the Agreement for an additional month, commencing on October 1, 2018, and expiring on October 31, 2018, unless sooner terminated or extended, in whole or in part; at no cost, with no obligation to Contractor to perform Maintenance Work or Services; and (b) make other certain changes as set forth in Amendment No. 31.

WHEREAS, the Authority and Contractor desire to further amend the Agreement to make changes necessary to (a) extend the Initial Term of the Agreement for an additional thirty (30) days commencing on November 1, 2018, and expiring on November 30, 2018, unless sooner terminated or extended, in whole or in part; at no cost, with no obligation to Contractor to perform Maintenance Work or Services; and (b) make other certain changes as set forth in Amendment No. 32.

WHEREAS, this Amendment No. 32 is authorized under Section 2 (Changes to Agreement) of the Agreement.

NOW THEREFORE, in consideration of the foregoing recitals, all of which are incorporated as part of this Amendment No. 32, and for other valuable consideration, the receipt and sufficiency of which are acknowledged, Authority and Contractor hereby agree as follows:

1. Capitalized Terms; Section References. Capitalized terms used herein without definition (including in the recitals hereto), have the meanings given to such terms in the Base Document. Unless otherwise noted, section references in this Amendment No. 32 refer to sections of the Base Document and its Exhibits, as amended by this Amendment No. 32.

2. Agreement Term. The parties further agree and acknowledge the Agreement term is being extended beyond September 30, 2018, until November 30, 2018, at no cost, and during this time the Contractor will not be obligated to provide Maintenance Work or Services, unless the parties agree otherwise. The Term of the Agreement may be extended on a no-cost basis for an additional thirty (30) days pursuant to the execution of an amendment, if any, in in accordance with Section 2 (Changes to Agreement) of the Base Document. In the event that an amendment is executed to extend the term for an additional thirty (30) days beyond November 30, 2018, at no cost, Contractor will not be obligated to provide Maintenance Work or Services, unless the parties agree otherwise.

3. Amendments to Base Document.

   3.1 Section 3.1 (Initial Term and Option Terms) within Section 3 (Term) of the Base Document of the Agreement is deleted in its entirety and replaced with the following:

3.1 Initial Term and Option Terms The initial term of this Agreement shall commence upon the Effective Date and shall expire at the end of the Warranty Period, unless sooner terminated or extended, in whole or in part, as provided in this Agreement (the "Initial Term"). The Authority may extend the Initial Term of this Agreement for up to four (4) additional consecutive one-year terms (each an "Option Term") in order for Contractor to perform Maintenance Work under Phase 5. Each Option Term shall be exercisable in the sole and unilateral discretion of the Authority in accordance with Section 4.1.2.2 (Unilateral Options). The Authority will endeavor to initiate the process described under 4.1.2.2 (Unilateral Options) no later than ninety (90) Days prior to the expiration of the Initial Term or then-current Option Term, but the Authority's failure to initiate such process within such timeframe shall not prevent the Authority from thereafter exercising such Option Term at any time prior to the expiration of the Initial Term or then-current Option Term. As used herein, "Term" means and includes the Initial Term and each Option Term exercised by the Authority in accordance with this Agreement.

The Term of this Agreement, pursuant to Amendment No. 24, Amendment No. 27, Amendment No. 28, Amendment No. 30, Amendment No. 31, and Amendment No. 32 respectively, shall expire on November 30, 2018, unless sooner terminated or extended, in whole or in part, as provided in this Agreement. The Term may be extended for an additional thirty (30) days by the Authority, at no cost, via an amendment pursuant to Section 2 (Changes to the Agreement) of the Base Document.

4. This Amendment No. 32 shall become effective as of the date identified in the recitals, which is the date upon which:

4.1 An authorized agent of Contractor has executed this Amendment No. 32;

4.2 Los Angeles County Counsel has approved this Amendment No. 32 as to form;

4.3 The Board of Directors of the Authority has authorized the Executive Director of the Authority to execute this Amendment No. 32; and

4.4 The Executive Director of the Authority has executed this Amendment No. 32.

5. Except as expressly provided in this Amendment No. 32, all other terms and conditions of the Agreement shall remain the same and in full force and effect.

6. Contractor and the person executing this Amendment No. 32 on behalf of Contractor represent and warrant that the person executing this Amendment No.

32 for Contractor is an authorized agent who has actual authority to bind Contractor to each and every term and condition of this Amendment No. 32, and that all requirements of Contractor to provide such actual authority have been fulfilled.

7. This Amendment No. 32 may be executed in one or more original or facsimile counterparts, all of which when taken together shall constitute one in the same instrument.

* * *

AMENDMENT NUMBER THIRTY-TWO
TO AGREEMENT NO. LA-RICS 008
FOR
LOS ANGELES REGIONAL INTEROPERABLE COMMUNICATIONS SYSTEM – PUBLIC SAFETY BROADBAND SYSTEM

IN WITNESS WHEREOF, the parties hereto have caused this Amendment No. 32 to be executed on their behalf by their duly authorized representatives, effective as of the date first set forth above.

LOS ANGELES REGIONAL INTEROPERABLE COMMUNICATIONS SYSTEM AUTHORITY

By: _____

Scott Edson
Executive Director

MOTOROLA SOLUTIONS, INC.

By: _____

Norm Folger
Motorola Project Director

APPROVED AS TO FORM FOR THE LOS ANGELES REGIONAL INTEROPERABLE COMMUNICATIONS SYSTEM AUTHORITY:

MARY C. WICKHAM
County Counsel

By: _____

Truc L. Moore
Principal Deputy County Counsel

LA-RICS

LOS ANGELES REGIONAL INTEROPERABLE COMMUNICATIONS SYSTEM AUTHORITY

2525 Corporate Place, Suite 100
Monterey Park, California 91754
Telephone: (323) 881-8291
http://www.la-rics.org

SCOTT EDSON
EXECUTIVE DIRECTOR

October 4, 2018

LA-RICS Board of Directors
Los Angeles Regional Interoperable Communications System Authority (the "Authority")

Dear Directors:

APPROVE AMENDMENT NO. 35 TO AGREEMENT NO. LA-RICS 007 FOR LOS ANGELES REGIONAL INTEROPERABLE COMMUNICATIONS SYSTEM – LAND MOBILE RADIO SYSTEM

SUBJECT

Board approval is requested to authorize the Executive Director to execute Amendment No. 35 to Agreement No. LA-RICS 007 (Agreement) to contemplate the reconciliation of one (1) Land Mobile Radio (LMR) System Sites; the inclusion of one (1) Land Mobile Radio (LMR) System Site in the scope of Phases 2, 3, and 4; incorporation of certain LMR Change Order Modifications; and reflect a cost reconciliation related to removal of certain Authority equipment, in particular an Uninterruptible Power Supply (UPS); all actions resulting in an increase to the Maximum Contract Sum in the amount of $376,870.

RECOMMENDED ACTIONS

It is recommended that your Board:

1. Make the following findings:

    a. Find that the inclusion of one (1) LMR System Site (Winding Way [WWY]) into Phase 2 (Site Construction and Site Modification), Phase 3 (Supply LMR Components), Phase 4 (LMR System Implementation), and exercising of the Unilateral Options to align with the updated LMR System Design is within the scope of the design, construction, implementation, operation and maintenance activities for the LMR System previously authorized at this site,

AGENDA ITEM J

which your Board previously found statutorily exempt from review under CEQA pursuant to Public Resources Code Section 21080.25, the exemption adopted specifically for the Los Angeles Regional Interoperable Communications System (LA-RICS) project, and any leased circuit work that may occur outside of Site WWY, if needed to provide network connectivity to the LMR System, categorically exempt under CEQA pursuant to Guidelines section 15301 (existing facilities), 15303 (new construction or conversion of small structures) and 15304 (minor alterations to land).

2. Approve Amendment No. 35 (Enclosure) to Agreement No. LA-RICS 007 for a LMR System with Motorola Solutions, Inc. (Motorola), which revises the Agreement to reflect the following:

   a. Reconciliation to remove one (1) LMR System Site Olinda (OLI) to align with the updated LMR System Design for a cost decrease in the amount of $701,234.

   b. Inclusion of one (1) LMR System Site Winding Way (WWY) into the scope of Phase 2 (Site Construction and Site Modification), Phase 3 (Supply LMR Components), Phase 4 (LMR System Implementation), and exercising the Unilateral Options of the same, to align with the updated LMR System Design for a cost increase in the amount of $1,064,388.

   c. Make changes necessary to incorporate LMR Change Order Modifications related to LMR System Site San Dimas (SDW) for a cost increase in the amount of $13,115.

   d. Make changes necessary to reflect an administrative reconciliation, a reconciliation related to the removal of certain Authority equipment, in particular an Uninterruptible Power Supply (UPS), from the Los Angeles Police Department's Valley Dispatch Center (LAPDVDC) for a cost increase in the amount of $601.

3. Authorize an increase to the Maximum Contract Sum in the amount $376,870 from $297,481,203 to $297,858,073 when considering the cost decreases and increases.

4. Allow for the issuance of one or more Notices to Proceed for the Work contemplated in Amendment No. 35.

5. Delegate authority to the Executive Director to execute Amendment No. 35, in substantially similar form, to the enclosed Amendment (Enclosure).

BACKGROUND

Site Inclusion and Reconciliation

The Authority continues to work closely with Motorola on the reconciliation of sites to align with the LMR System redesign. As this is an iterative process, the ongoing design work has resulted in the need to reconcile certain Work, equipment, and corresponding costs for certain LMR System Sites to reflect the updated design. As a result, part of the recommended actions contemplate the inclusion of the WWY site and the removal of the OLI site.

Change Order Modifications

With respect to the LMR Change Order Modifications contemplated in Amendment No.35, Authority staff, including its consultants, and the LMR Contractor, Motorola have reviewed and negotiated each claim, including the associated costs, for each change order. The changes presented in Amendment No. 35 benefit the LMR project and are required for the completion of the LMR System. LMR change orders are considered for a variety of reasons and reflect items that were not originally considered in the contract or are performed in order to ratify an agreement between the Authority and its Contractor, Motorola, regarding work to be performed.

Administrative Reconciliation for UPS Removal

On July 31, 2018, your Board approved Amendment No. 34 to the Agreement to remove UPS equipment from the LAPDVDC site.

PURPOSE/JUSTIFICATION OF RECOMMENDED ACTION

Approval of the recommended actions will authorize the Executive Director to execute Amendment No. 35 to reconcile one (1) LMR System Site to align with the updated LMR System Design Agreement; include one (1) Land Mobile Radio (LMR) System Site in the scope of Phases 2, 3, and 4; incorporate certain LMR Change Order Modifications; and reflect a cost reconciliation related to removal of certain Authority equipment, in particular UPS; all actions resulting in an increase to the Maximum Contract Sum in the amount of $376,870.

Site Inclusion and Reconciliation

As a result of the membership opt outs and redesign efforts to date, it is necessary to reconcile the Work and equipment at one (1) LMR System Site (OLI) to align with the updated LMR System Design. The OLI LMR System Site is a site which is no longer part of the LMR System design. Such reconciliations include the removal of OLI site

from Phase 1 through Phase 4. Further reconciliations contemplate the inclusion of the WWY site into the scope of Phase 2 through Phase 4. Approval of the recommended actions will authorize the Authority to proceed with construction, implementation, operation, and maintenance of LMR infrastructure at Site WWY.

Change Order Modifications

With respect to the LMR Change Order Modifications contemplated in Amendment No.35, Authority staff, including its consultants, and the LMR Contractor, Motorola, have reviewed and negotiated each claim, including the associated costs, for each change order. The changes presented in Amendment No. 35 benefit the LMR project and are required for the completion of the LMR System. LMR change orders are considered for a variety of reasons and reflect items that were not originally considered in the contract or are performed in order to ratify an agreement between the Authority and its Contractor, Motorola, regarding work to be performed. The work includes supplying and installing an additional waveguide bridge from the existing equipment shelter to the new tower and includes providing complete grounding at the SDW site.

Administrative Reconciliation for UPS Removal

An administrative reconciliation, a reconciliation related to the removal of certain Authority equipment, in particular an Uninterruptible Power Supply (UPS), from the Los Angeles Police Department's Valley Dispatch Center (LAPDVDC) is necessary to reconcile the schedule of payments to appropriately reflect costs associated with this work that were not previously contemplated.

FISCAL IMPACT/FINANCING

The activities contemplated in Amendment No. 35 will increase the Maximum Contract Sum by $376,870 from $297,481,203 to $297,858,073 when considering the cost decreases and increases and shall be fully reimbursed by the Urban Areas Security Initiative (UASI) grant.

ENVIRONMENTAL DOCUMENTATION

As the CEQA lead agency, the Authority previously determined on December 12, 2016 (WWY) that design, construction, implementation, operation, and maintenance of LMR System infrastructure at this one (1) LMR System Sites is exempt from review under CEQA pursuant to Public Resources Code Section 21080.25, the statutory CEQA exemption adopted specifically for the LA-RICS, which exempts these activities as long as they meet certain criteria set forth in the exemption. In connection with those CEQA determinations for LMR System Site WWY, the Authority also determined that leased circuit work that may occur outside of this one (1) LMR System Site as needed to

provide connectivity to the LMR System is categorically exempt under CEQA pursuant to CEQA Guidelines section 15301 (existing facilities), 15303 (new construction or conversion of small structures), and 15304 (minor alterations to land). Approval of the inclusion into the scope of Phases 2, 3, and 4, and exercising of the Unilateral Options for Site WWY and to align with the updated LMR System Design are within the scope of the previously authorized activities, and the determination that these activities are exempt from CEQA remains unchanged. This determination is supported by substantial evidence in the custody of the Authority, which is incorporated in relevant part into the record of proceedings for this Amendment No. 35.

Upon the Board's approval of the recommended actions for this Amendment No. 35, the Authority will file a Notice of Exemption (NOE) for one (1) LMR System Site (WWY) with the County Clerk in accordance with Section 15062 of the State CEQA Guidelines.

FACTS AND PROVISIONS/LEGAL REQUIREMENT

The Authority's counsel has reviewed the recommended actions.

CONCLUSION

Upon the Board's approval of the recommended actions, the Executive Director will have delegated authority to proceed in a manner described in the recommended actions.

Respectfully submitted,

SCOTT EDSON
EXECUTIVE DIRECTOR

JA:rf:pl
M:\MOTOROLA (LA-RICS 007)\2. Amendments\Amendment 35 (Draft)\LMR Amendment 35 Board Letter_09-27-18v.3.docx

Enclosure

cc: Counsel to the Authority

AMDENDMENT NUMBER THIRTY-FIVE

TO AGREEMENT NO. LA-RICS 007
FOR
LOS ANGELES REGIONAL INTEROPERABLE COMMUNICATIONS SYSTEM – LAND MOBILE RADIO SYSTEM

Recitals

This Amendment Number Thirty-Five (together with all exhibits, attachments, and schedules hereto, "Amendment No. 35") is entered into by and between the Los Angeles Regional Interoperable Communications System Authority ("Authority") and Motorola Solutions, Inc. ("Contractor"), effective as of October _____, 2018, based on the following recitals:

Authority and Contractor have entered into that certain Agreement No. LA-RICS 007 for Los Angeles Regional Interoperable Communications System ("LA-RICS") – Land Mobile Radio System, dated as of August 15, 2013 (together with all exhibits, attachments, and schedules thereto, all as amended prior to the date hereof, the "Agreement").

The Agreement has been previously amended by Amendment Number One, effective as of September 5, 2013, to exercise the Unilateral Option for all Work pertaining to Phase 1 (System Design), without the Additive Alternates; with no change to the Maximum Contract Sum.

The Agreement has been previously amended by Amendment Number Two, effective as of October 29, 2013, to exercise the Unilateral Option for all Work pertaining to Project Descriptions in Phase 1 (System Design) for the Bounded Area Coverage Additive Alternate; with no change to the Maximum Contract Sum.

The Agreement has been previously amended by Amendment Number Three, effective as of December 19, 2013, to, among other things, exercise the Unilateral Option for all Work pertaining to Contractor's provision and implementation of Specified Equipment (as defined in Amendment No. 3) increasing the Maximum Contract Sum by $1,285,230, from $280,354,954 to $281,640,184.

The Agreement has been previously amended by Amendment Number Four, effective as of December 19, 2013, to, among other things, provide and implement under Phase 1 (System Design) certain additional equipment referred to as "Station B Equipment" increasing the Maximum Contract Sum by $1,169,047, from $281,640,184 to $282,809,231.

The Agreement has been previously amended by Amendment Number Five, effective as of March 27, 2014, to, among other things; include license coordination fees, increasing the Maximum Contract Sum by $20,240, from $282,809,231 to $282,829,472.

The Agreement has been previously amended by Amendment Number Six, effective as of April 17, 2014, to, among other things, upgrade to the Los Angeles Police Department's Valley Dispatch Center's ("LAPDVDC") Uninterruptible Power Supply ("UPS") to accommodate the installation and deployment of Core 2 at this facility, increasing the Maximum Contract Sum by $68,146, from $282,829,472 to $282,897,618.

The Agreement has been previously amended by Amendment Number Seven, effective as of May 8, 2014, to, among other things, purchase portable radios, radio accessories, consolettes, and consoles; and to add a provision to address potential joint obligations of Authority and Contractor under the Antennae Lease Agreement dated April 17, 2014, between the City of Los Angeles, the Authority, and Contractor; increasing the Maximum Contract Sum by $5,177,051, from $282,897,618 to $288,074,669.

The Agreement has been previously amended by Amendment Number Eight, effective as of August 28, 2014, to purchase additional portable radios and radio accessories; increasing the Maximum Contract Sum by $3,671,006, from $288,074,669 to $291,745,675.

The Agreement has been previously amended by Amendment Number Nine, effective November 19, 2014, to (a) make changes necessary to reflect the removal of one (1) LMR System Site and all the Work and equipment associated with the removal of this site; (b) make the necessary changes to reflect Phase 1 (System Design) Project Description Work only for twenty-six (26) potential replacement sites; (c) exercise the Unilateral Options for all Work pertaining to Phase 2 (Site Construction and Site Modification), Phase 3 (Supply LMR System Components), and Phase 4 (LMR System Implementation) for twenty-six (26) existing LMR System Sites; with no increase to the Maximum Contract Sum.

The Agreement has been previously amended by Amendment Number Ten, effective February 17, 2015, to (a) make the necessary changes to reflect Phase 1 (System Design) Description Work for one (1) potential replacement site; (b) make changes necessary to reflect the removal of four (4) LMR System Sites and all the Work and equipment associated with these sites; (c) make changes necessary to reflect the inclusion of four (4) LMR System Sites and all the Work and equipment associated with these sites and exercise the Unilateral Options for all Work pertaining to Phase 1 (System Design), Phase 2 (Site Construction and Site Modification), Phase 3 (Supply LMR System Components), and Phase 4 (LMR System Implementation) for these four (4) LMR System Sites; (d) exercise the Unilateral Options for all Work pertaining to Phase 2 (Site Construction and Site Modification), Phase 3 (Supply LMR System Components), and Phase 4 (LMR System Implementation) for eight (8) LMR System Sites currently contemplated in the Design; (e) allow for two power load studies to be conducted; and (f) make other certain changes as reflected in Amendment No. 10, increasing the Maximum Contract Sum by $1,101,138, from $291,745,675 to $292,846,813.

The Agreement has been previously amended by Amendment Number Eleven, effective April 28, 2015, to (a) make the necessary changes to reflect Phase 1 (System Design) Description Work for two (2) potential replacement sites; (b) make changes

necessary to reflect an existing credit from Amendment No. 3 in the amount of $547,158 in Phase 3 (Supply LMR System Components) for one (1) LMR System Site, (c) make changes necessary to add project management costs that were inadvertently omitted in Amendment No. 10 in the amount of $64,282 in Phase 4 (LMR System Implementation) for one (1) LMR System Site, and (d) make other certain changes as reflected in Amendment No. 11, all of which reduced the Maximum Contract Sum by $459,529, from $292,846,813 to $292,387,284.

The Agreement has been previously amended in Amendment Number Twelve, effective August 27, 2015, to (a) make the necessary changes to reflect the shifting of FCC Licensing Work and costs from Phase 3 (Supply LMR System Components) to Phase 1 (System Design) in the amount of $284,041; (b) make certain changes to reflect the increase of FCC Licensing Work to contemplate the licensing of all UHF T-Band frequencies as referenced in Attachment B, at each of the applicable subsystem sites in order to achieve compliance with the performance criteria set forth in the Agreement, all in the amount of $139,076; (c) make the necessary changes to reflect the inclusion of a bridge warranty for the Specified Equipment (Core 1, Core 2, repeater sites, Site on Wheels, and Station B Equipment) previously purchased under Amendment No. 3 and Amendment No. 4, to bridge the gap in warranty for this equipment until such time as Final LMR System Acceptance is achieved in the amount of $647,533; and (d) to purchase portable radios, radio accessories, consolettes, and a control station for the Los Angeles Sheriff's Department Aero Bureau for purposes of mutual aid in the amount of $386,234; increasing the Maximum Contract Sum by $1,172,843 from $292,387,284 to $293,560,127.

The Agreement has been previously amended to Amendment Number Thirteen effective October 30, 2015 to make the necessary changes to reflect Phase 1 (System Design) Work to add lease exhibits to twenty-nine (29) LMR System Sites; increasing the Maximum Contract Sum by $14,888 from $293,560,127 to $293,575,015.

The Agreement has been previously amended in Amendment Number Fourteen, effective November 17, 2015, to reflect the Work to reprogram UHF frequencies in accordance with Attachment A and purchase upgraded equipment for the County of Los Angeles Sheriff's Department's (LASD) Station B, as well as the Authority's System on Wheels to prepare for use at certain scheduled events in the amount of $64,256, increasing the Maximum Contract Sum from $293,575,015 to $293,639,271.

The Agreement has been previously amended in Amendment Number Fifteen, effective December 17, 2015, to reflect the inclusion of Phase 1 (System Design) Project Description Work for eleven (11) potential replacement sites in the amount of $128,414, increasing the Maximum Contract Sum from $293,639,271 to $293,767,685.

The Agreement has been previously amended in Amendment Number Sixteen, effective December 23, 2015, to (a) reflect the removal of thirty-one (31) LMR System Sites from the scope of Phase 1 (System Design) Work only for a cost reduction in the amount of $1,132,374; (b) reflect the inclusion of seventeen (17) LMR System Sites into the scope of Phase 1 (System Design) only which includes all Work associated with the

addition of these sites into Phase 1 (System Design) for a cost increase in the amount of $635,537; (c) exercise the Unilateral Options for all Work pertaining to Phase 1 (System Design) for seventeen (17) LMR System Sites; (d) include Phase 1 (System Design) Project Description Work only for one (1) potential replacement site (LACF134) for a cost increase in the amount of $11,674; (e) account for a comprehensive redesign of the LMR System and all associated Work for a cost increase in the amount of $1,054,440; (f) reflect the removal, relocation, and deployment of the LMR System Core 2 equipment from Los Angeles Police Department Valley Dispatch Center (LAPDVDC) to Palmdale Sheriff Station (PLM) and necessary Work associated with this relocation and for a cost increase in the amount of $499,912; increasing the Maximum Contract Sum by $1,069,189 ($635,537 + $11,674 + $1,054,440 + $499,912 - $1,132,374 when taking the above cost increases and decreases into consideration) from $293,767,685 to $294,836,874.

The Agreement has been previously amended in Amendment Number Seventeen, effective April 25, 2016, as follows:

(a) Make changes necessary to reflect the removal of thirty-four (34) LMR System Sites from the scope of Phase 1 (System Design), Phase 2 (Site Construction and Site Modification), Phase 3 (Supply LMR System Components), and Phase 4 (LMR System Implementation), respectively, and all associated Work of the same for a cost reduction in the amount of $45,143,083.

(b) Make the changes necessary to reflect the inclusion of nineteen (19) LMR System Sites into the scope of Phase 1 (System Design), Phase 2 (Site Construction and Site Modification), Phase 3 (Supply LMR System Components), and Phase 4 (LMR System Implementation), respectively, and all associated Work of the same for a cost increase in the amount of $23,677,589.

(c) Re-baselining of the project management overhead expenses, attributable in the Agreement to each phase of the work that contemplates project management fees, to more accurately reflect the current project scope, and to establish a formula to more accurately price the net impact on project management overhead expenses of any subsequent addition or removal of sites. The re-baseline removes costs on a per site basis to a new per phase deliverable as contemplated in Amendment No. 17 in the amount of $8,207,108. This re-baselining does however result in a net cost reduction in the amount of $572,826 which is contemplated in the re-baseline.

(d) Reconcile equipment necessary for certain LMR System Sites as well as the logging recorder as a result of redesign for a cost increase in the amount of $3,171,159.

(e) Exercise the Unilateral Options for all Work pertaining to Phase 1 (System Design), Phase 2 (Site Construction and Site Modification), Phase 3 (Supply LMR System Components), and Phase 4 (LMR System Implementation)

respectively, for those LMR System Sites contained in the LMR System reflecting the reconciliation of sites contemplated in Amendment No. 17.

(e) Decreasing the Maximum Contract Sum by $10,087,227 (-$45,143,083 + $ 23,677,589 + $8,207,108 + $3,171,159) when taking the above cost increases and decreases into consideration) from $294,836,874 to $284,749,647.

(f) Make other certain changes as set forth in Amendment No. 17.

The Agreement has been previously amended in Amendment Number Eighteen, effective May 4, 2016, to (a) reflect the inclusion of eight (8) LMR System Sites into the scope of Phase 1 (System Design) Work only which includes all Work associated with the addition of these sites into Phase 1 (System Design) for a cost increase in the amount of $76,136; (b) exercise the Unilateral Options for all Work pertaining to Phase 1 (System Design) for eight (8) LMR System Sites; (c) reflect the inclusion of Phase 1 (System Design) Project Description Work for four (4) LMR System Sites for a cost increase in the amount of $46,696; and (d) increasing the Maximum Contract Sum by $122,832 ($76,136 + $46,696), when taking the cost increases into consideration from $284,749,647 to $284,872,479.

The Agreement has been previously amended in Amendment Number Nineteen, effective May 5, 2016, to make changes necessary to (a) reflect the removal of one (1) LMR System Site from the scope of Phase 1 (System Design), Phase 2 (Site Construction and Site Modification), Phase 3 (Supply LMR System Components), and Phase 4 (LMR System Implementation) for a cost reduction in the amount of $1,192,712, which includes a reduction in the amount of $20,322 for project management costs for this site; (b) reconcile equipment necessary for certain LMR System Sites as a result of redesign for a cost increase in the amount of $1,197,256; increasing the Maximum Contract Sum by $4,544 ($1,197,256 - $1,192,712), when taking the cost increases and decreases into consideration, from $284,872,479 to $284,877,023; and (c) make other certain changes as set forth in Amendment No. 19.

The Agreement has been previously amended in Amendment Number Twenty, effective September 28, 2016, to make changes necessary to (a) reconcile nine (9) LMR System Sites to reflect the updated LMR System Design for a cost increase in the amount of $367,144, (b) include 3D Modeling Work for certain LMR System Sites for a cost increase in the amount of $6,534; (c) remove Site Lease Exhibit Work for certain LMR System Sites for a cost decrease in the amount of $14,884; (d) increasing the Maximum Contract Sum by $358,794 ($367,144 + $6,534 - $14,884) from $284,877,023 to $285,235,817 when taking the cost increases and decreases into consideration and (e) make other certain changes as set forth in Amendment No. 20.

The Agreement has been previously amended in Amendment Number Twenty-One, effective October 27, 2016, to make changes necessary to reflect (a) the replacement of one (1) LMR System Site Johnstone Peak (JPK) with site Johnstone Peak 2 (JPK2) by (1) removing site JPK from the scope of Phase 1 (System Design), Phase 2

(Site Construction and Site Modification), Phase 3 (Supply LMR System Components), and Phase 4 (LMR System Implementation), respectively, and all associated Work of the same; and (2) include the JPK2 site into the scope of Phase 1 (System Design), Phase 2 (Site Construction and Site Modification), Phase 3 (Supply LMR System Components), and Phase 4 (LMR System Implementation), respectively, and all associated Work of the same, with the equivalent scope and cost for all Phases as JPK resulting in a cost neutral replacement; (b) exercise the Unilateral Options for all Work pertaining to Phase 1 (System Design) only for the replacement site Johnstone Peak 2; (c) reconcile ten (10) LMR System Sites to reflect the updated LMR System Design for a cost increase in the amount of $804,944; (d) remove five (5) Project Descriptions from the scope of Phase 1 Work for a cost decrease in the amount of $58,370; (e) make changes necessary to reflect an administrative revisions for a cost decrease in the amount of $32,001; (f) increasing the Maximum Contract Sum by $714,573 ($804,944 - $58,370 - $32,001) from $285,235,817 to $285,950,390, when taking the cost increases and decreases into consideration; and (g) make other certain changes as set forth in Amendment No. 21.

The Agreement has been previously amended in Amendment Number Twenty-Two, effective November 17, 2016, to make changes necessary to reflect (a) the reconciliation of three (3) LMR System Sites to reflect the updated LMR System Design for a cost increase in the amount of $476,676; (b) increasing the Maximum Contract Sum by $476,676 from $285,950,390 to $286,427,066, when taking the cost increase into consideration; and (c) make other certain changes as set forth in Amendment No. 22.

The Agreement has been previously amended in Amendment Number Twenty-Three, effective December 21, 2016, to make changes necessary to (a) include four (4) LMR System Sites and all Work and equipment associated with these sites into Phase 1 (System Design) to be contemplated in the LMR System for a cost increase in the amount of $36,068; (b) exercise the respective Unilateral Options all Phase 1 (System Design) Work pertaining to the four (4) LMR System Sites; (c) purchase certain Radio Equipment to be used with Authority's User Equipment for a cost increase in the amount of $948; (d) increase the Maximum Contract Sum by $39,016 from $286,427,066 to $286,466,082, when taking the cost increases into consideration; and (d) make other certain changes as set forth in Amendment No. 23.

The Agreement has been previously amended in Amendment Number Twenty-Four effective January 25, 2017, to make changes necessary to reflect (a) the reconciliation of six (6) LMR System Sites to align with the updated LMR System Design for a cost increase in the amount of $2,379,232; (b) increase the Maximum Contract Sum by $2,379,232 from $286,466,082 to $288,845,314, when taking the cost increase into consideration; and (c) make other certain changes as set forth in Amendment No. 24.

The Agreement has been previously amended in Amendment Number Twenty-Five effective March 20, 2017, to make changes necessary to reflect (a) the reconciliation of five (5) LMR System Sites to align with the updated LMR System Design for a cost decrease in the amount of $330,670; (b) the inclusion of three (3) LMR System Sites into the scope of Phase 2 (Site Construction and Site Modification), Phase 3 (Supply LMR Components), Phase 4 (LMR System Implementation), and exercising the Unilateral

Options of the same, to align with the updated LMR System Design for a cost increase in the amount of $4,684,205 (c) increase the Maximum Contract Sum by $4,353,535 from $288,845,314 to $293,198,849, when taking the cost increase and decrease into consideration; and (d) make other certain changes as set forth in Amendment No. 25.

The Agreement has been previously amended in Amendment Number Twenty-Six, effective April 13, 2017, to make changes necessary to reflect (a) the reconciliation of seven (7) LMR System Sites to align with the updated LMR System Design for a cost increase in the amount of $2,336,048; (b) the inclusion of one (1) LMR System Site into the scope of Phase 2 (Site Construction and Site Modification), Phase 3 (Supply LMR Components), Phase 4 (LMR System Implementation), and exercising the Unilateral Options of the same, to align with the updated LMR System Design for a cost increase in the amount of $64,744 (c) increase the Maximum Contract Sum by $2,400,792 from $293,198,849 to $295,599,641, when taking the cost increase into consideration; and (d) make other certain changes as set forth in Amendment No. 26.

The Agreement has been previously amended in Amendment Number Twenty-Seven, effective June 1, 2017, to make changes necessary to reflect (a) the reconciliation of two (2) LMR System Sites to align with the updated LMR System Design for a cost decrease in the amount of $355,410 (b) the inclusion of two (2) LMR System Sites into the scope of Phase 2 (Site Construction and Site Modification), Phase 3 (Supply LMR Components), Phase 4 (LMR System Implementation), and exercising the Unilateral Options of the same, to align with the updated LMR System Design for a cost increase in the amount of $1,439,627 (c) make changes necessary to reflect an administrative reconciliation, a reconciliation related to dropped sites, and a reconciliation related to services performed in Phase 1 for a cost decrease in the amount of $3,434,574; (d) increase the scope to include all Work necessary to implement an environmental Mitigation Monitoring and Reporting Plan into the LMR program to assess and ensure mitigation measures are met for a cost increase in the amount of $2,912,356, (e) increase the Maximum Contract Sum by $561,999 from $295,599,641 to $296,161,640 when taking the cost increases and decreases into consideration; and (f) make other certain changes as set forth in Amendment No. 27.

The Agreement has been previously amended in Amendment Number Twenty-Eight, effective August 21, 2017, to make changes necessary to reflect (a) the reconciliation of one (1) LMR System Site to align with the updated LMR System Design for a cost increase of $868,771 (b) make changes necessary to reflect LMR Change Order Modifications for a cost increase in the amount of $31,487; (c) increase the Maximum Contract Sum by $900,258 from $296,161,640 to $297,061,898 when taking the cost increases into consideration; and (d) make other certain changes as set forth in Amendment No. 28.

The Agreement has been previously amended in Amendment Number Twenty-Nine, effective September 07, 2017, to make changes necessary to reflect (a) the inclusion of one (1) LMR System Site into the scope of Phase 2 (Site Construction and Site Modification), Phase 3 (Supply LMR Components), Phase 4 (LMR System Implementation), and exercise the Unilateral Options of the same, to align with the

updated LMR System Design for a cost increase in the amount of $1,170,471 (b) make changes necessary to reflect LMR Change Order Modifications for a cost increase in the amount of $31,922; (c) increase the Maximum Contract Sum by $1,202,393 from $297,061,898 to $298,264,291 when taking the cost increases into consideration; and (d) make other certain changes as set forth in Amendment No. 29.

The Agreement has been previously amended in Amendment Number Thirty, effective November 09, 2017, to make changes necessary to reflect (a) the reconciliation of seven (7) LMR System Site to align with the updated LMR System Design for a cost decrease of $1,664,767 (b) the inclusion of one (1) LMR System Site into the scope of Phase 2 (Site Construction and Site Modification), Phase 3 (Supply LMR Components), Phase 4 (LMR System Implementation), and exercise the Unilateral Options of the same, to align with the updated LMR System Design for a cost increase in the amount of $1,228,018 (c) make changes necessary to reflect LMR Change Order Modifications for a cost increase in the amount of $4,195; (d) upgrade equipment for the Multiprotocol Label Switching (MPLS) Mobile Backhaul which will provide the backhaul capacity necessary for network performance reliability and functionality for a cost increase in the amount of $2,200,000; (e) increase the Maximum Contract Sum by $1,767,446 from $298,264,291 to $300,031,737 when taking the cost increases and decreases into consideration; and (f) make other certain changes as set forth in Amendment No. 30.

The Agreement has been previously amended in Amendment Number Thirty-One, effective February 28, 2018, to make changes necessary to reflect (a) certain LMR Change Order Modifications, in particular the installation of tower lighting at Mira Loma (MLM) LMR System Site, for a cost increase in the amount of $19,573; (d) increase the Maximum Contract Sum by $19,573 from $300,031,737 to $300,051,310 when taking the cost increases into consideration; and (b) make other certain changes as set forth in Amendment No. 31.

The Agreement has been previously amended in Amendment Number Thirty-Two, effective March 1, 2018, to make changes necessary to reflect (a) the reconciliation of three (3) LMR System Sites to align with the updated LMR System Design for a cost decrease in the amount of $4,131,931; (b) a cost neutral administrative reconciliation in connection with the Narrowband Mobile Data Network (NMDN) Subsystem to align all corresponding per site NMDN costs to a single line item cost, impacting thirty-three (33) LMR System Sites; (c) decrease the Maximum Contract Sum by $4,131,931 from $300,051,310 to $295,919,379 when taking the cost decrease into consideration; and (d) make other certain changes as set forth in Amendment No. 32.

The Agreement has been previously amended in Amendment Number Thirty-Three, effective May 30, 2018, to make changes necessary to reflect (a) certain LMR Change Order Modifications for a cost increase in the amount of $17,490 (b) increase the Maximum Contract Sum by $17,490 from $295,919,379 to $295,936,869 when taking the cost increase into consideration; and (c) make other certain changes as set forth in Amendment No. 33.

The Agreement has been previously amended in Amendment Number Thirty-Four, effective July 31, 2018, to make changes necessary to reflect (a) the inclusion of one (1) LMR System Site into the scope of Phase 2 (Site Construction and Site Modification), Phase 3 (Supply LMR Components), Phase 4 (LMR System Implementation), and exercise the Unilateral Options of the same, to align with the updated LMR System Design for a cost increase in the amount of $1,016,780; (b) certain LMR Change Order Modifications for a cost increase in the amount of $90,744; (c) the removal of certain Authority equipment, in particular an Uninterruptible Power Supply (UPS), from the Los Angeles Police Department's Valley Dispatch Center (LAPDVDC) for a cost increase in the amount of $6,010; (d) an extension of a bridge warranty for the certain Early Deployment/Specified Equipment purchased and deployed under previously approved Amendments to bridge the warranty gap for this equipment until December 31, 2019, for a cost increase in the amount of $430,800; (e) increase the Maximum Contract Sum by $1,544,334 from $295,936,869 to $297,481,203 when taking the cost increase into consideration; and (f) make other certain changes as set forth in Amendment No. 34.

The Authority and Contractor desire to further amend the Agreement to make changes necessary to reflect (a) the reconciliation of one (1) LMR System Site Olinda (OLI) from the scope of Phase 1 (System Design), Phase 2 (Site Construction and Site Modification), Phase 3 (Supply LMR System Components), and Phase 4 (LMR System Implementation), respectively, and all associated Work of the same for a cost decrease in the amount of $701,234; (b) the inclusion of one (1) LMR System Site Winding Way (WWY) into the scope of Phase 2 (Site Construction and Site Modification), Phase 3 (Supply LMR Components), Phase 4 (LMR System Implementation), and exercise the Unilateral Options of the same, to align with the updated LMR System Design for a cost increase in the amount of $1,064,388; (c) certain LMR Change Order Modifications for a cost increase in the amount of $13,115 (d) make changes necessary to reflect an administrative reconciliation, a reconciliation related to the removal of certain Authority equipment, in particular an Uninterruptible Power Supply (UPS), from the Los Angeles Police Department's Valley Dispatch Center (LAPDVDC) for a cost increase in the amount of $601; (e) decrease the Maximum Contract Sum by $376,870 from $297,481,203 to $297,858,073 when taking the cost decrease into consideration; and (f) make other certain changes as set forth in this Amendment No. 35.

This Amendment No. 35 is authorized under Section 2 (Changes to Agreement) of the Agreement.

NOW THEREFORE, in consideration of the foregoing recitals, all of which are incorporated as part of this Amendment No. 35, and for other valuable consideration, the receipt and sufficiency of which are acknowledged, Authority and Contractor hereby agree as follows:

1. Capitalized Terms; Section References. Capitalized terms used herein without definition (including in the recitals hereto), have the meanings given to such terms in the Base Document. Unless otherwise noted, section references in this Amendment No. 35 refer to sections of the Base Document, as amended by this Amendment No. 35.

2. LMR System Site Reconciliation. The parties agree and acknowledge to reconcile one (1) LMR System Sites to align with the updated LMR System Design. The reconciliation contemplates one (1) LMR System Sites (WWY) that will no longer be considered for inclusion in the LMR System and will be removed from the scope of Phase 1 (System Design), Phase 2 (Site Construction and Site Modification), Phase 3 (Supply LMR System Components), and Phase 4 (LMR System Implementation), respectively. No further Work will occur at this site and this site is removed from the relevant portions of Exhibit C (Schedule of Payments).

RECONCILIATION OF LMR SYSTEM SITES – AMENDMENT 35			
Item No.	**Site ID**	**Site Description**	**Reconciliation**
2.1	OLI	Olinda	Remove from the scope of Phase 1 through 4

3. LMR System Site Inclusion. The parties agree and acknowledge to include one (1) LMR System Sites into the scope of Phase 2 (Site Construction and Site Modification), Phase 3 (Supply LMR System Components), and Phase 4 (LMR System Implementation) to align with the updated LMR System Design. The costs associated with the inclusion of this one (1) LMR System Site is included in the relevant portions of Exhibit C (Schedule of Payments). Additionally, pursuant to Section 6.6 of this Amendment No. 35, the detailed costs associated with the inclusion of these sites are contained in Exhibit C.13.1 (LMR System Detailed Cost Summary).

INCLUSION OF LMR SYSTEM SITE – AMENDMENT NO. 35		
Item No.	**Site ID**	**Site Description**
3.1	WWY	Winding Way

4. Exercise of Unilateral Options. As provided in Section 4.1.2.2(c) of the Base Document, Authority has determined in its sole and unilateral discretion to exercise the Unilateral Options for all Work as it relates to one (1) LMR System Site currently contemplated in the Design and reflected in this Amendment No. 35 and Exhibit C (Schedule of Payments) for all Work pertaining to Phase 2 (Site Construction and Site Modification), Phase 3 (Supply LMR System Components), and Phase 4 (LMR System Implementation), to construct, purchase, and implement this one (1) LMR System Site. Subject to Section 4.1.2.3 (Notices to Proceed) of the Base Document, the Contractor agrees that it shall, on a timely basis and in accordance with the Agreement, fully perform, provide, complete, and deliver all Work encompassed in such Unilateral Options for Phase 2 (Site Construction and Site Modification), Phase 3 (Supply LMR System Components), and Phase 4 (LMR System Implementation) Work of the one (1) LMR System Site contemplated in this Amendment No. 35, in exchange for the amounts set forth in Exhibit C (Schedule of Payments) for such Work.

5. Amendments to the Base Document.

5.1 Section 8.1.1 of the Base Document is deleted in its entirety and replaced with the following:

8.1.1. The "Maximum Contract Sum" under this Agreement is Two Hundred Ninety-Seven Million, Eight Hundred Fifty-Eight Thousand, and Seventy-Three Dollars ($297,858,073), which includes the Contract Sum and all Unilateral Option Sums, as set forth in Exhibit C (Schedule of Payments).

5.2 Section 24.4.1 of the Base Document is deleted in its entirety and replaced with the following:

24.4.1 Except for liability resulting from personal injury, harm to tangible property, or wrongful death, Contractor's total liability to the Authority, whether for breach of contract, warranty, negligence, or strict liability in tort, will be limited in the aggregate to direct damages no greater than Two Hundred Ninety-Six Million, Four Hundred Eighty-Eight Thousand, Four Hundred and Eight Dollars ($296,488,808). Notwithstanding the foregoing, Contractor shall not be liable to the Authority for any special, incidental, indirect, or consequential damages.

6. Amendments to Agreement Exhibits.

6.1 Exhibit C.1 (LMR System Payment Summary) to Exhibit C (Schedule of Payments) is deleted in its entirety and replaced with Exhibit C.1 (LMR System Payment Summary) to Exhibit C (Schedule of Payments) attached to this Amendment No. 35, which is incorporated herein by this reference.

6.2 Exhibit C.2 (Phase 1 – System Design) to Exhibit C (Schedule of Payments) is deleted in its entirety and replaced with Exhibit C.2 (Phase 1 – System Design) to Exhibit C (Schedule of Payments) attached to this Amendment No. 35, which is incorporated by this reference.

6.3 Exhibit C.3 (Phase 2 – Site Construction and Site Modification) to Exhibit C (Schedule of Payments) is deleted in its entirety and replaced with Exhibit C.3 (Phase 2 – Site Construction and Site Modification) to Exhibit C (Schedule of Payments) attached to this Amendment No. 35, which is incorporated herein by this reference.

6.4 Exhibit C.4 (Phase 3 – Supply LMR System Components) to Exhibit C (Schedule of Payments) is deleted in its entirety and replaced with Exhibit C.4 (Phase 3 – Supply LMR System Components) to Exhibit C (Schedule of Payments) attached to this Amendment No. 35, which is incorporated herein by this reference.

6.5 Exhibit C.5 (Phase 4 – LMR System Implementation) to Exhibit C (Schedule of Payments) is deleted in its entirety and replaced with Exhibit C.5 (Phase 4 – LMR System Implementation) to Exhibit C (Schedule of Payments) attached to this Amendment No. 35, which is incorporated herein by this reference.

6.6 Exhibit C.13.1 (LMR System Detailed Cost Summary), dated July 2018, is deleted in its entirety and replaced with Exhibit C.13.1 (LMR System Detailed Cost Summary), dated September 2018, and shall be added to Exhibit C.13 (Contractor's Response to Appendix H (Pricing Requirements) to RFP No. LA-RICS 007) to Exhibit C (Schedule of Payments), which is incorporated herein by this reference.

6.7 Exhibit C.17 (LMR Change Order Modifications) to Exhibit C (Schedule of Payments) is deleted in its entirety and replaced with Exhibit C.17 (LMR Change Order Modifications), attached to this Amendment No. 35, which is incorporated herein by this reference.

7. This Amendment No. 35 shall become effective as of the date identified in the recitals, which is the date upon which:

7.1 An authorized agent of Contractor has executed this Amendment No. 35;

7.2 Los Angeles County Counsel has approved this Amendment No. 35 as to form;

7.3 The Board of Directors of the Authority has authorized the Executive Director of the Authority, if required, to execute this Amendment No. 35; and

7.4 The Executive Director of the Authority has executed this Amendment No. 35.

8. Except as expressly provided in this Amendment No. 35, all other terms and conditions of the Agreement shall remain the same and in full force and effect.

9. Contractor and the person executing this Amendment No. 35 on behalf of Contractor represent and warrant that the person executing this Amendment No. 35 for Contractor is an authorized agent who has actual authority to bind Contractor to each and every term and condition of this Amendment No. 35, and that all requirements of Contractor to provide such actual authority have been fulfilled.

10. This Amendment No. 35 may be executed in one or more original or facsimile counterparts, all of which when taken together shall constitute one in the same instrument.

* * *

AMENDMENT NUMBER THIRTY-FIVE

TO AGREEMENT NO. LA-RICS 007
FOR
LOS ANGELES REGIONAL INTEROPERABLE COMMUNICATIONS SYSTEM – LAND MOBILE RADIO SYSTEM

IN WITNESS WHEREOF, the parties hereto have caused this Amendment No. 35 to be executed on their behalf by their duly authorized representatives, effective as of the date first set forth above.

LOS ANGELES REGIONAL INTEROPERABLE COMMUNICATIONS SYSTEM AUTHORITY

By: _____

Scott Edson
Executive Director

MOTOROLA SOLUTIONS, INC.

By: _____

Norm Folger
Motorola Project Director

APPROVED AS TO FORM FOR THE LOS ANGELES REGIONAL INTEROPERABLE COMMUNICATIONS SYSTEM AUTHORITY:

MARY C. WICKHAM
County Counsel

By: _____

Truc L. Moore
Principal Deputy County Counsel

EXHIBIT C.1 - SCHEDULE OF PAYMENTS LMR SYSTEM PAYMENT SUMMARY				
Summary	**Unilateral Option Sum**	**Contract Sum - Full Payable Amount**	**10% Holdback Amount**	**Payment Minus 10% Holdback Amount**
Phase 1(Note 1)	$ -	$ 43,400,362	$ 3,124,069	$ 40,276,293
Phase 2	$ -	$ 44,811,220	$ 4,321,400	$ 39,986,506
Phase 3	$ -	$ 62,492,952	$ 4,800,417	$ 57,239,724
Phase 4	$ -	$ 28,286,484	$ 2,759,211	$ 25,466,618
SUBTOTAL (Phases 1 to 4):	**$ -**	**$ 178,991,018**	**$ 15,005,097**	**$ 162,969,140**
Phase 5 (15 Years)	$ 55,898,518	$ -	$ -	$ 55,898,518
TOTAL (Phases 1 to 5):	**$ 55,898,518**	**$ 178,991,018**	**$ 15,005,097**	**$ 218,867,658**
Bounded Area Coverage Additive Alternate (Note 1)	$ 19,109,375	$ -	$ 1,910,937	$ 17,198,437
Mandatory Building Coverage Additive Alternate	$ 29,828,448	$ -	$ 2,982,845	$ 26,845,603
Metrorail Coverage Additive Alternate	$ 4,792,260	$ -	$ 479,226	$ 4,313,034
LMR System Maintenance for Additive Alternates	$ 19,620,355	$ -	$ 1,962,036	$ 17,658,320
Source Code Software Escrow	$ 1,304,000	$ -	$ 130,400	$ 1,173,600
LMR Mitigation Monitoring and Reporting Plan		$ 2,912,356	$ -	$ 2,912,356
LMR Change Order Modifications		$ 208,526	$ 20,853	$ 187,673
Multiprotocol Label Switching Mobile Backhaul		$ 2,200,000	$ 220,000	$ 1,980,000
SUBTOTAL	**$ 130,552,956**	**$ 184,311,900**	**$ 22,711,394**	**$ 291,136,681**
TOTAL CONTRACT SUM:	**$184,311,900**			
LMR Discounts(Note 2)	**-$17,006,782**			
MAXIMUM CONTRACT SUM(Total Unilateral Option Sum plus Total Contract Sum):	**$297,858,073**			

Note 1: The cost for the Project Descriptions for the Bounded Area Coverage only are reflected in Exhibit C.2 (Phase 1 - System Design) as amended and restated in Amendment No. 2., and included ($173, 110) in Phase 1 Contract Sum - Full Payable Amount. The balance of the remaining Unilateral Option Sum for Bounded Area Coverage Additive Alternate Work is reflected in Exhibit C.7 (Bounded Area Coverage Additive Alternate).

Note 2: The total remaining balance of the LMR Discounts applied to the Max Contract Sum will be utilized at the discretion of the Authority.

EXHIBIT C.2 - SCHEDULE OF PAYMENTS

PHASE 1 - SYSTEM DESIGN

Deliverable/Task/ Section No. *(Exhibit A, Exhibit B, or Base Document)*	Site ID	Deliverable	Unilateral Option Sum (Notes 3, 5, 6, 7, 8,9)	Credits (Note 11)	Contract Sum - Payable Amount for Phase 1 (Notes 3-22)	10% Holdback Amount	Payable Amount Less 10% Holdback
A.1.1		Project Management Staffing Plan Delivered	-	-	Included	$ -	$ -
A.1.2		Overview and Scope Delivered	-	-	Included	$ -	$ -
A.1.3		Communications Plan Delivered	-	-	$ 67,233	$ 6,723	$ 60,510
A.1.4		Initial Integrated Master Schedule Delivered	-	-	$ 89,644	$ 8,964	$ 80,680
A.1.5		Documentation Plan Delivered	-	-	Included	$ -	$ -
A.1.6		Quality Control Plan Delivered	-	-	$ 67,233	$ 6,723	$ 60,510
A.1.7		Change Order/Change Management Plan Delivered	-	-	Included	$ -	$ -
A.1.8		Initial Risk Management Plan Delivered	-	-	$ 89,644	$ 8,964	$ 80,680
A.1		Project Management Plan - Final	-	-	$ 112,055	$ 11,206	$ 100,850
B.1.6		FCC License and Application Forms	-	-	Included	$ -	$ -
B.1.12		Coverage Modeling Tool and Training	-	-	Included	$ -	$ -
B.1.14.1		Detailed Project Description - 50% of sites	-	-	$ 1,368,583	$ 136,858	$ 1,231,725
B.1.14.1		Detailed Project Description - Final 50% of Sites	-	-	$ 1,368,583	$ 136,858	$ 1,231,725
B.1.14.2		RF Emission Safety Report Delivered	-	-	Included	$ -	$ -
B.1.14.3.3.29.1		DTVRS Design – Digital Trunked Voice Radio Subsystem:	-	-	$ -	-	-
B.1.14.3.3.29.1		80% DTVRS Design – Digital Trunked Voice Radio Subsystem	-	-	$ 1,965,745		$ 1,965,745
B.1.14.3.3.29.1		20% DTVRS Design – Digital Trunked Voice Radio Subsystem	-	-	$ 491,436	$ 245,718	$ 245,718
B.1.14.3.3.29.2		ACVRS Design – Analog Conventional Voice Radio Subsystem:	-	-	$ -	-	-
B.1.14.3.3.29.2		80% ACVRS Design – Analog Conventional Voice Radio Subsystem	-	-	$ 446,491		$ 446,491
B.1.14.3.3.29.2		20% ACVRS Design – Analog Conventional Voice Radio Subsystem	-	-	$ 111,623	$ 55,811	$ 55,812
B.1.14.3.3.29.3		LARTCS Design – Los Angeles Regional Tactical Communications Subsystem:	-	-	$ -	-	-
B.1.14.3.3.29.3		80% LARTCS Design – Los Angeles Regional Tactical Communications Subsystem	-	-	$ 486,144		$ 486,144
B.1.14.3.3.29.3		20% LARTCS Design – Los Angeles Regional Tactical Communications Subsystem	-	-	$ 121,535	$ 60,768	$ 60,767
B.1.14.3.3.29.4		NMDN Design – Narrowband Mobile Data Network	-	-	$ -	-	-
B.1.14.3.3.29.4		80% NMDN Design – Narrowband Mobile Data Network	-	-	$ 113,646		$ 113,646
B.1.14.3.3.29.4		20% NMDN Design – Narrowband Mobile Data Network	-	-	$ 28,412	$ 14,206	$ 14,206
B.1.14.3.3.29.5		Consoles Design	-	-	Included		
B.1.14.3.3.29.6		Logging Recorder Description	-	-	Included		
B.1.14.3.3.29.7		Site Interconnection/Backhaul Subsystem Description:	-	-	$ -	-	-
B.1.14.3.3.29.7		80% Site Interconnection/Backhaul Subsystem Description:	-	-	$ 170,323		$ 170,323
B.1.14.3.3.29.7		20% Site Interconnection/Backhaul Subsystem Description:	-	-	$ 42,581	$ 21,290	$ 21,291
B.1.14.3.3.29.8		System Management and Monitoring Subsystem Description	-	-	Included		
B.1.14.3.3.29.9		Inventory and Maintenance Tracking Subsystem Description	-	-	Included		
B.1.14.3		LMR Final System Design Approval (Note 1)	-	-	$ 757,702	$ 75,770	$ 681,932
B.1.15		Inventory and Maintenance Tracking Subsystem	-	-	$ 974,026	$ 97,403	$ 876,623
		Project Management for Phase 1 – System Design Monthly Reports	-	-	Included	$ -	$ -
Base.22.3.2		Performance Bond for Phase 1 – System Design	-	-	$ 29,774	$ -	$ 29,774
		Total Lease Costs for Phase 1 – System Design	-	-	$ -	$ -	
Base.22.2.1		Liability Insurance (General and Professional)	-	-	$ 527,500	$ -	$ 527,500
LMR SYSTEM SITES							
B.1.14.5		**Site Design Review Packages 75% Zoning Submittal by Site** (Note 2)	-	-	$ -	$ -	$ -
~~B.1.14.5~~	~~BAH~~	~~Baldwin Hills~~	-	-	$ (3)	$ (0)	$ (3)
B.1.14.5	BJM	Black Jack Peak	-	-	$ 7,138	$ 714	$ 6,424
B.1.14.5	BMT	Bald Mountain	-	-	$ 7,138	$ 714	$ 6,424
~~B.1.14.5~~	~~BRK~~	~~Blue Rock~~	-	-	$ -	$ -	$ -
~~B.1.14.5~~	~~BUR~~	~~Burnt Peak~~	-	-	$ -	$ -	$ -
~~B.1.14.5~~	~~BVG~~	~~Beverly Glen~~	-	-	$ -	$ -	$ -
B.1.14.5	CCB	Compton Court Building	-	-	$ 7,138	$ 714	$ 6,424
~~B.1.14.5~~	~~CEP~~	~~Century Plaza~~	-	-	$ -	$ -	$ -
B.1.14.5	CLM	Claremont	-	-	$ 7,138	$ 714	$ 6,424
B.1.14.5	CPK	Castro Peak	-	-	$ 7,138	$ 714	$ 6,424
B.1.14.5	DPK	Dakin Peak	-	-	$ 7,138	$ 714	$ 6,424
~~B.1.14.5~~	~~ELSGDPD~~	~~El Segundo PD~~	-	-	$ -	$ -	$ -
~~B.1.14.5~~	~~ENC1~~	~~Encinal 1 (Fire Camp)~~	-	-	$ -	$ -	$ -
B.1.14.5	GRM	Green Mountain	-	-	$ 7,138	$ 714	$ 6,424
B.1.14.5	HPK	Hauser Peak	-	-	$ 7,138	$ 714	$ 6,424
~~B.1.14.5~~	~~JPK~~	~~Johnstone Peak~~	-	-	$ -	$ -	$ -
~~B.1.14.5~~	~~LACF028~~	~~FS 28~~	-	-	$ -	$ -	$ -
~~B.1.14.5~~	~~LACF056~~	~~FS 56~~	-	-	$ -	$ -	$ -
~~B.1.14.5~~	~~LACF071~~	~~FS 71~~	-	-	$ -	$ -	$ -
B.1.14.5	LACF072	FS 72	-	-	$ 7,138	$ 714	$ 6,424
~~B.1.14.5~~	~~LACF077~~	~~FS 77~~	-	-	$ -	$ -	$ -
~~B.1.14.5~~	~~LACF084~~	~~FS 84~~	-	-	$ -	$ -	$ -
~~B.1.14.5~~	~~LACF091~~	~~FS 91~~	-	-	$ -	$ -	$ -
~~B.1.14.5~~	~~LACF099~~	~~FS 99~~	-	-	$ -	$ -	$ -
~~B.1.14.5~~	~~LACF119~~	~~FS 119~~	-	-	$ -	$ -	$ -

EXHIBIT C.2 - SCHEDULE OF PAYMENTS

PHASE 1 - SYSTEM DESIGN

Deliverable/Task/ Section No. (Exhibit A, Exhibit B, or Base Document)	Site ID	Deliverable	Unilateral Option Sum (Notes 3, 5, 6, 7, 8,9)	Credits (Note 11)	Contract Sum - Payable Amount for Phase 1 (Notes 3-22)	10% Holdback Amount	Payable Amount Less 10% Holdback
~~B.1.14.5~~	~~LACF144~~	~~FS 144~~	-	-	$ -	$ -	$ -
~~B.1.14.5~~	~~LACF149~~	~~FS 149~~	-	-	$ -	$ -	$ -
~~B.1.14.5~~	~~LACF157~~	~~FS 157~~	-	-	$ -	$ -	$ -
~~B.1.14.5~~	~~LACF196~~	~~FS 169~~	-	-	$ -	$ -	$ -
~~B.1.14.5~~	~~LACFCP09~~	~~CP 9~~	-	-	$ -	$ -	$ -
B.1.14.5	LACFDEL	Los Angeles County Fire Deparmental Del Valle Training Camp	-	-	$ 7,138	$ 714	$ 6,424
~~B.1.14.5~~	~~LAH~~	~~LA City Hall~~	-	-	$ -	$ -	$ -
~~B.1.14.5~~	~~LBR~~	~~Lower Blue Ridge~~	-	-	$ -	$ -	$ -
B.1.14.5	LDWP243	DWP Sylmar Water Ladder	-	-	$ 7,138	$ 714	$ 6,424
~~B.1.14.5~~	~~MAM~~	~~Magic Mountain~~	-	-	$ -	$ -	$ -
B.1.14.5	MDI	Mount Disappointment	-	-	$ 7,138	$ 714	$ 6,424
~~B.1.14.5~~	~~MLE~~	~~Mount Lee~~	–	–	~~$ -~~	~~$ -~~	~~$ -~~
B.1.14.5	MLM	Mira Loma Facility	-	-	$ 7,138	$ 714	$ 6,424
B.1.14.5	MMC	Mount McDill	-	-	$ 7,138	$ 714	$ 6,424
~~B.1.14.5~~	~~MTL~~	~~Mount Lukens~~	-	-	$ -	$ -	$ -
~~B.1.14.5~~	~~MTT~~	~~Mount Thom~~	-	-	$ -	$ -	$ -
~~B.1.14.5~~	~~MTW~~	~~Mount Washington~~	-	-	$ -	$ -	$ -
B.1.14.5	MVS	Monte Vista (Star Center)	-	-	$ 7,138	$ 714	$ 6,424
~~B.1.14.5~~	~~OMC~~	~~Oat Mountain~~	-	-	$ -	$ -	$ -
B.1.14.5	OAT	Oat Mountain	-	-	$ 7,138	$ 714	$ 6,424
B.1.14.5	ONK	Oat Mountain Nike	-	-	$ 7,138	$ 714	$ 6,424
B.1.14.5	PHN	Puente Hills	-	-	$ 7,138	$ 714	$ 6,424
B.1.14.5	PRG	Portal Ridge	-	-	$ 7,138	$ 714	$ 6,424
~~B.1.14.5~~	~~PSH~~	~~Pomona 1620 Hillcrest~~	–	–	~~$ -~~	~~$ -~~	~~$ -~~
~~B.1.14.5~~	~~RDNBPD~~	~~Redondo Beach PD~~	-	$ -	$ -	$ -	$ -
B.1.14.5	RHT	Rolling Hills Transmit	-	-	$ 7,138	$ 714	$ 6,424
B.1.14.5	RIH	Rio Hondo	-	-	$ 7,138	$ 714	$ 6,424
~~B.1.14.5~~	~~RPVE001~~	~~Rancho Palos Verdes City Hall~~	-	-	$ -	$ -	$ -
~~B.1.14.5~~	~~SAG~~	~~San Augustine~~	-	-	$ -	$ -	$ -
B.1.14.5	SDW	San Dimas	-	-	$ 7,138	$ 714	$ 6,424
B.1.14.5	SGH	Signal Hill	-	-	$ 7,138	$ 714	$ 6,424
~~B.1.14.5~~	~~SPC~~	~~San Pedro Hill~~	-	-	$ -	$ -	$ -
B.1.14.5	SPN	Saddle Peak	-	-	$ 7,138	$ 714	$ 6,424
B.1.14.5	SUN	Sunset Ridge	-	-	$ 7,138	$ 714	$ 6,424
~~B.1.14.5~~	~~SVP~~	~~San Vicente Peak~~	-	-	$ -	$ -	$ -
~~B.1.14.5~~	~~SWP~~	~~Southwest Area Station~~	-	-	$ -	$ -	$ -
B.1.14.5	TOP	Topanga Peak	-	-	$ 7,138	$ 714	$ 6,424
B.1.14.5	TPK	Tejon Peak	-	-	$ 7,138	$ 714	$ 6,424
B.1.14.5	TWR	Tower Peak	-	-	$ 7,138	$ 714	$ 6,424
~~B.1.14.5~~	~~VPC~~	~~Verdugo Peak~~	-	-	$ -	$ -	$ -
~~B.1.14.5~~	~~WAD~~	~~Walker Drive~~	–	–	$ -	$ -	$ -
B.1.14.5	WMP	Whitaker Middle Peak	-	-	$ 7,138	$ 714	$ 6,424
B.1.14.5	WS1	100 Wilshire	-	-	$ 7,138	$ 714	$ 6,424
B.1.14.5	WTR	Whittaker Ridge	-	-	$ 7,138	$ 714	$ 6,424
~~B.1.14.5~~	~~LAPD077~~	~~77TH Street Area Complex~~	-	-	$ -	$ -	$ -
~~B.1.14.5~~	~~LAPDDVN~~	~~Devonshire Area station~~	-	-	$ -	$ -	$ -
~~B.1.14.5~~	FCCF	L.A. County Fire Command	-	-	$ 7,138	$ 714	$ 6,424
~~B.1.14.5~~	~~LAPDVDC~~	~~Valley Dispatch Center~~	-	-	$ -	$ -	$ -
B.1.14.6		**Permit Approval by Site** (Note 2)	-	-	**$ -**	**$ -**	**$ -**
~~B.1.14.6~~	~~BAH~~	~~Baldwin Hills~~	-	-	$ -	$ -	$ -
B.1.14.6	BJM	Black Jack Peak	-	-	$ 2,379	$ 238	$ 2,141
B.1.14.6	BMT	Bald Mountain	-	-	$ 2,379	$ 238	$ 2,141
~~B.1.14.6~~	~~BUR~~	~~Blue Rock~~	-	-	$ -	$ -	$ -
~~B.1.14.6~~	~~BRK~~	~~Burnt Peak~~	-	-	$ -	$ -	$ -
~~B.1.14.6~~	~~BVG~~	~~Beverly Glen~~	-	-	$ -	$ -	$ -
B.1.14.6	CCB	Compton Court Building	-	-	$ 2,379	$ 238	$ 2,141
~~B.1.14.6~~	~~CEP~~	~~Century Plaza~~	-	-	$ -	$ -	$ -
B.1.14.6	CLM	Claremont	-	-	$ 2,379	$ 238	$ 2,141
B.1.14.6	CPK	Castro Peak	-	-	$ 2,379	$ 238	$ 2,141
B.1.14.6	DPK	Dakin Peak	-	-	$ 2,379	$ 238	$ 2,141
~~B.1.14.6~~	~~ELSGDPD~~	~~El Segundo PD~~	-	-	$ -	$ -	$ -
~~B.1.14.6~~	~~ENC1~~	~~Encinal 1 (Fire Camp)~~	–	–	~~$ -~~	~~$ -~~	~~$ -~~
B.1.14.6	GRM	Green Mountain	-	-	$ 2,379	$ 238	$ 2,141
B.1.14.6	HPK	Hauser Peak	-	-	$ 2,379	$ 238	$ 2,141
~~B.1.14.6~~	~~JPK~~	~~Johnstone Peak~~	–	–	~~$ -~~	~~$ -~~	~~$ -~~
~~B.1.14.6~~	~~LACF028~~	~~FS 28~~	-	-	$ -	$ -	$ -
~~B.1.14.6~~	~~LACF056~~	~~FS 56~~	-	-	$ -	$ -	$ -
~~B.1.14.6~~	~~LACF071~~	~~FS 71~~	-	-	$ -	$ -	$ -
B.1.14.6	LACF072	FS 72	-	-	$ 2,379	$ 238	$ 2,141
~~B.1.14.6~~	~~LACF077~~	~~FS 77~~	-	-	$ -	$ -	$ -

EXHIBIT C.2 - SCHEDULE OF PAYMENTS

PHASE 1 - SYSTEM DESIGN

Deliverable/Task/ Section No. (Exhibit A, Exhibit B, or Base Document)	Site ID	Deliverable	Unilateral Option Sum (Notes 3, 5, 6, 7, 8,9)	Credits (Note 11)	Contract Sum - Payable Amount for Phase 1 (Notes 3-22)	10% Holdback Amount	Payable Amount Less 10% Holdback
~~B.1.14.6~~	~~LACF084~~	~~FS 84~~	-	-	$ -	$ -	$ -
~~B.1.14.6~~	~~LACF091~~	~~FS 91~~	-	-	$ -	$ -	$ -
~~B.1.14.6~~	~~LACF099~~	~~FS 99~~	-	-	$ -	$ -	$ -
~~B.1.14.6~~	~~LACF0119~~	~~FS 119~~	-	-	$ -	$ -	$ -
~~B.1.14.6~~	~~LACF144~~	~~FS 144~~	-	-	$ -	$ -	$ -
~~B.1.14.6~~	~~LACF149~~	~~FS 149~~	-	-	$ -	$ -	$ -
~~B.1.14.6~~	~~LACF157~~	~~FS 157~~	-	-	$ -	$ -	$ -
~~B.1.14.6~~	~~LACF169~~	~~FS 169~~	-	-	$ -	$ -	$ -
~~B.1.14.6~~	~~LACFCP09~~	~~CP 9~~	-	-	$ -	$ -	$ -
B.1.14.6	LACFDEL	Los Angeles County Fire Deparmental Del Valle Training Camp	-	-	$ 2,379	$ 238	$ 2,141
~~B.1.14.6~~	~~LAHE~~	~~LA City Hall~~	-	-	$ -	$ -	$ -
~~B.1.14.6~~	~~LBR~~	~~Lower Blue Ridge~~	-	-	$ -	$ -	$ -
B.1.14.6	LDWP243	DWP Sylmar Water Ladder	-	-	$ 2,379	$ 238	$ 2,141
~~B.1.14.6~~	~~MAM~~	~~Magic Mountain~~	-	-	$ -	$ -	$ -
B.1.14.6	MDI	Mount Disappointment	-	-	$ 2,379	$ 238	$ 2,141
~~B.1.14.6~~	~~MLE~~	~~Mount Lee~~	-	-	~~$ -~~	~~$ -~~	~~$ -~~
B.1.14.6	MLM	Mira Loma Facility	-	-	$ 2,379	$ 238	$ 2,141
B.1.14.6	MMC	Mount McDill	-	-	$ 2,379	$ 238	$ 2,141
~~B.1.14.6~~	~~MTL~~	~~Mount Lukens~~	-	-	$ -	$ -	$ -
~~B.1.14.6~~	~~MTT~~	~~Mount Thom~~	-	-	$ -	$ -	$ -
~~B.1.14.6~~	~~MTW~~	~~Mount Washington~~	-	-	$ -	$ -	$ -
B.1.14.6	MVS	Monte Vista (Star Center)	-	-	$ 2,379	$ 238	$ 2,141
~~B.1.14.6~~	~~OMC~~	~~Oat Mountain~~	-	-	$ -	$ -	$ -
B.1.14.6	OAT	Oat Mountain	-	-	$ 2,379	$ 238	$ 2,141
B.1.14.6	ONK	Oat Mountain Nike	-	-	$ 2,379	$ 238	$ 2,141
B.1.14.6	PHN	Puente Hills	-	-	$ 2,379	$ 238	$ 2,141
B.1.14.6	PRG	Portal Ridge	-	-	$ 2,379	$ 238	$ 2,141
~~B.1.14.6~~	~~PSH~~	~~Pomona 1620 Hillcrest~~	-	-	~~$ -~~	~~$ -~~	~~$ -~~
~~B.1.14.6~~	~~RDNBPD~~	~~Redondo Beach PD~~	-	$ -	$ -	$ -	$ -
B.1.14.6	RHT	Rolling Hills Transmit	-	-	$ 2,379	$ 238	$ 2,141
B.1.14.6	RIH	Rio Hondo	-	-	$ 2,379	$ 238	$ 2,141
~~B.1.14.6~~	~~RPVE001~~	~~Rancho Palos Verdes City Hall~~	-	-	$ -	$ -	$ -
~~B.1.14.6~~	~~SAG~~	~~San Augustine~~	-	-	$ -	$ -	$ -
B.1.14.6	SDW	San Dimas	-	-	$ 2,379	$ 238	$ 2,141
B.1.14.6	SGH	Signal Hill	-	-	$ 2,379	$ 238	$ 2,141
~~B.1.14.6~~	~~SPC~~	~~San Pedro Hill~~	-	-	$ -	$ -	$ -
B.1.14.6	SPN	Saddle Peak	-	-	$ 2,379	$ 238	$ 2,141
B.1.14.6	SUN	Sunset Ridge	-	-	$ 2,379	$ 238	$ 2,141
~~B.1.14.6~~	~~SVP~~	~~San Vicente Peak~~	-	-	$ -	$ -	$ -
~~B.1.14.6~~	~~SWP~~	~~Southwest Area Station~~	-	-	$ -	$ -	$ -
B.1.14.6	TOP	Topanga Peak	-	-	$ 2,379	$ 238	$ 2,141
B.1.14.6	TPK	Tejon Peak	-	-	$ 2,379	$ 238	$ 2,141
B.1.14.6	TWR	Tower Peak	-	-	$ 2,379	$ 238	$ 2,141
~~B.1.14.6~~	~~VPC~~	~~Verdugo Peak~~	-	-	$ -	$ -	$ -
~~B.1.14.6~~	~~WAD~~	~~Walker Drive~~	-	-	$ -	$ -	$ -
B.1.14.6	WMP	Whitaker Middle Peak	-	-	$ 2,379	$ 238	$ 2,141
B.1.14.6	WS1	100 Wilshire	-	-	$ 2,379	$ 238	$ 2,141
B.1.14.6	WTR	Whittaker Ridge	-	-	$ 2,379	$ 238	$ 2,141
~~B.1.14.6~~	~~LAPD077~~	~~77TH Street Area Complex~~	-	-	$ -	$ -	$ -
~~B.1.14.6~~	~~LAPDDVN~~	~~Devonshire Area station~~	-	-	$ -	$ -	$ -
B.1.14.6	FCCF	L.A. County Fire Command	-	-	$ 2,379	$ 238	$ 2,141
~~B.1.14.6~~	~~LAPDVDC~~	~~Valley Dispatch Center~~	-	-	$ -	$ -	$ -
Subtotal for Phase 1:			**$ -**	**$ -**	**$ 9,734,454**	**$ 917,718**	**$ 8,816,736**
LMR SYSTEM ADDITIONAL SITES (AMENDMENT NO. 10)							
B.1.14.5		**Site Design Review Packages 75% Zoning Submittal by Site**					
B.1.14.5	APC	Airport Courthouse			$ 7,138	$ 714	$ 6,424
~~B.1.14.5~~	~~BHCCPRK~~	~~Beverly Hills' Coldwater Canyon Park~~			$ -	$ -	$ -
~~B.1.14.5~~	~~LACF136~~	~~FS 136~~			$ -	$ -	$ -
~~B.1.14.5~~	~~LAHE~~	~~LA City Hall East~~			$ -	$ -	$ -
~~B.1.14.5~~	~~OLI~~	~~Olinda~~			~~$ -~~	~~$ -~~	~~$ -~~
B.1.14.6		**Permit Approval by Site**					
B.1.14.6	APC	Airport Courthouse			$ 2,379	$ 238	$ 2,141
~~B.1.14.6~~	~~BCHCPRK~~	~~Beverly Hills' Coldwater Canyon Park~~			$ -	$ -	$ -
~~B.1.14.6~~	~~LACF136~~	~~FS 136~~			$ -	$ -	$ -
~~B.1.14.6~~	~~LAHE~~	~~LA City Hall East~~			$ -	$ -	$ -
~~B.1.14.6~~	~~OLI~~	~~Olinda~~			~~$ -~~	~~$ -~~	~~$ -~~
Subtotal for Additional Sites (Amendment No. 10)			**$ -**	**$ -**	**$ 9,517**	**$ 952**	**$ 8,565**
LMR SYSTEM ADDITIONAL SITES (AMENDMENT NO. 16)							
B.1.14.5	**Site Design Review Packages 75% Zoning Submittal by Site**						
B.1.14.5	AGH	Agoura Hills			$ 7,138	$ 714	$ 6,424

EXHIBIT C.2 - SCHEDULE OF PAYMENTS

PHASE 1 - SYSTEM DESIGN

Deliverable/Task/ Section No. (Exhibit A, Exhibit B, or Base Document)	Site ID	Deliverable	Unilateral Option Sum (Notes 3, 5, 6, 7, 8,9)	Credits (Note 11)	Contract Sum - Payable Amount for Phase 1 (Notes 3-22)	10% Holdback Amount	Payable Amount Less 10% Holdback
B.1.14.5	CCT	Criminal Court (Foltz)			$ 7,138	$ 714	$ 6,424
B.1.14.5	CRN	Cerro Negro			$ 7,138	$ 714	$ 6,424
B.1.14.5	FRP	Frost Peak (Upper Blue Ridge)			$ 7,138	$ 714	$ 6,424
B.1.14.5	GMT	Grass Mountain			$ 7,138	$ 714	$ 6,424
B.1.14.5	H17A	H-17 Helipad			$ 7,138	$ 714	$ 6,424
B.1.14.5	LASDTEM	Los Angeles County Sheriff Temple Station			$ 7,138	$ 714	$ 6,424
B.1.14.5	LPC	Loop Canyon			$ 7,138	$ 714	$ 6,424
B.1.14.5	LEPS	Lower Encinal Pump Station			$ 7,138	$ 714	$ 6,424
B.1.14.5	MIR	Mirador			$ 7,138	$ 714	$ 6,424
B.1.14.5	MML	Magic Mountain Link			$ 7,138	$ 714	$ 6,424
B.1.14.5	MTL2	Mount Lukens 2			$ 7,138	$ 714	$ 6,424
B.1.14.5	PDC	Pacific Design Center			$ 7,138	$ 714	$ 6,424
B.1.14.5	PLM	Los Angeles County Palmdale Sheriff Station			$ 7,138	$ 714	$ 6,424
B.1.14.5	PMT	Pine Mountain			$ 7,138	$ 714	$ 6,424
B.1.14.5	PWT	Portshead Tank			$ 7,138	$ 714	$ 6,424
B.1.14.5	VPK	Verdugo Peak County			$ 7,138	$ 714	$ 6,424
B.1.14.6	**Permit Approval by Site**						
B.1.14.6	AGH	Agoura Hills			$ 2,379	$ 238	$ 2,141
B.1.14.6	CCT	Criminal Court (Foltz)			$ 2,379	$ 238	$ 2,141
B.1.14.6	CRN	Cerro Negro			$ 2,379	$ 238	$ 2,141
B.1.14.6	FRP	Frost Peak (Upper Blue Ridge)			$ 2,379	$ 238	$ 2,141
B.1.14.6	GMT	Grass Mountain			$ 2,379	$ 238	$ 2,141
B.1.14.6	H17A	H-17 Helipad			$ 2,379	$ 238	$ 2,141
B.1.14.6	LASDTEM	Los Angeles County Sheriff Temple Station			$ 2,379	$ 238	$ 2,141
B.1.14.6	LPC	Loop Canyon			$ 2,379	$ 238	$ 2,141
B.1.14.6	LEPS	Lower Encinal Pump Station			$ 2,379	$ 238	$ 2,141
B.1.14.6	MIR	Mirador			$ 2,379	$ 238	$ 2,141
B.1.14.6	MML	Magic Mountain Link			$ 2,379	$ 238	$ 2,141
B.1.14.6	MTL2	Mount Lukens 2			$ 2,379	$ 238	$ 2,141
B.1.14.6	PDC	Pacific Design Center			$ 2,379	$ 238	$ 2,141
B.1.14.6	PLM	Los Angeles County Palmdale Sheriff Station			$ 2,379	$ 238	$ 2,141
B.1.14.6	PMT	Pine Mountain			$ 2,379	$ 238	$ 2,141
B.1.14.6	PWT	Portshead Tank			$ 2,379	$ 238	$ 2,141
B.1.14.6.	VPK	Verdugo Peak County			$ 2,379	$ 238	$ 2,141
Subtotal for Additional Sites (Amendment No. 16)			**$ -**	**$ -**	**$ 161,789**	**$ 16,179**	**$ 145,610**
LMR SYSTEM ADDITIONAL SITES (AMENDMENT NO. 17)							
B.1.14.5	**Site Design Review Packages 75% Zoning Submittal by Site**						
B.1.14.5	BUR1	Burnt Peak 1			$ 7,138	$ 714	$ 6,424
B.1.14.5	LARICSHQ	LA-RICS Headquarters			$ 7,138	$ 714	$ 6,424
B.1.14.6	**Permit Approval by Site**						
B.1.14.6	BUR1	Burnt Peak 1			$ 2,379	$ 238	$ 2,141
B.1.14.6	LARICSHQ	LA-RICS Headquarters			$ 2,379	$ 238	$ 2,141
Subtotal for Additional Sites (Amendment No. 17)			**$ -**	**$ -**	**$ 19,034**	**$ 1,903**	**$ 17,131**
LMR SYSTEM ADDITIONAL SITES (AMENDMENT NO. 18)							
B.1.14.5	**Site Design Review Packages 75% Zoning Submittal by Site**						
B.1.14.5	BHS	Baldwin Hills County			$ 7,138	$ 714	$ 6,424
B.1.14.5	BKK	BKK Landfill			$ 7,138	$ 714	$ 6,424
B.1.14.5	DPW38	Los Angeles County Department of Public Works Pump Station 38			$ 7,138	$ 714	$ 6,424
B.1.14.5	POM	Pomona Courthouse			$ 7,138	$ 714	$ 6,424
B.1.14.5	RPV1	Rancho Palos Verdes			$ 7,138	$ 714	$ 6,424
B.1.14.5	SMMC	Santa Monica/UCLA Medical Center			$ 7,138	$ 714	$ 6,424
B.1.14.5	UCLA	UCLA (Factor Building)			$ 7,138	$ 714	$ 6,424
B.1.14.5	WWY	Winding Way			$ 7,138	$ 714	$ 6,424
B.1.14.6	**Permit Approval by Site**						
B.1.14.6	BHS	Baldwin Hills County			$ 2,379	$ 238	$ 2,141
B.1.14.6	BKK	BKK Landfill			$ 2,379	$ 238	$ 2,141
B.1.14.6	DPW38	Los Angeles County DPW Water Tank			$ 2,379	$ 238	$ 2,141
B.1.14.6	POM	Pomona Courthouse			$ 2,379	$ 238	$ 2,141
B.1.14.6	RPV1	Rancho Palos Verdes			$ 2,379	$ 238	$ 2,141
B.1.14.6	SMMC	Santa Monica/UCLA Medical Center			$ 2,379	$ 238	$ 2,141
B.1.14.6	UCLA	UCLA (Factor Building)			$ 2,379	$ 238	$ 2,141
B.1.14.6	WWY	Winding Way			$ 2,379	$ 238	$ 2,141
Subtotal for Additional Sites (Amendment No. 18)			**$ -**	**$ -**	**$ 76,136**	**$ 7,614**	**$ 68,522**
LMR SYSTEM ADDITIONAL SITE (AMENDMENT NO. 21)							
B.1.14.5	**Site Design Review Packages 75% Zoning Submittal by Site**						
B.1.14.5	JPK2	Johnstone Peak - 2			$ 7,138	$ 714	$ 6,424
B.1.14.6	**Permit Approval by Site**						
B.1.14.6	JPK2	Johnstone Peak - 2			$ 2,379	$ 238	$ 2,141
Subtotal for Additional Site (Amendment No. 21)			**$ -**	**$ -**	**$ 9,517**	**$ 952**	**$ 8,565**
LMR SYSTEM ADDITIONAL SITE (AMENDMENT NO. 23)							

EXHIBIT C.2 - SCHEDULE OF PAYMENTS

PHASE 1 - SYSTEM DESIGN

Deliverable/Task/ Section No. (Exhibit A, Exhibit B, or Base Document)	Site ID	Deliverable	Unilateral Option Sum (Notes 3, 5, 6, 7, 8,9)	Credits (Note 11)	Contract Sum - Payable Amount for Phase 1 (Notes 3-22)	10% Holdback Amount	Payable Amount Less 10% Holdback
B.1.14.5	**Site Design Review Packages 75% Zoning Submittal by Site**						
B.1.14.5	IND	Industry Water Tank			$ 7,138	$ 714	$ 6,424
B.1.14.5	SPH	San Pedro Hill			$ 7,138	$ 714	$ 6,424
B.1.14.5	UNIV	Universal Studios			$ 7,138	$ 714	$ 6,424
B.1.14.5	LAN	Lancaster			$ 7,138	$ 714	$ 6,424
B.1.14.6	**Permit Approval by Site**						
B.1.14.6	IND	Industry Water Tank			$ 2,379	$ 238	$ 2,141
B.1.14.6	SPH	San Pedro Hill			$ 2,379	$ 238	$ 2,141
B.1.14.6	UNIV	Universal Studios			$ 2,379	$ 238	$ 2,141
B.1.14.6	LAN	Lancaster			$ 2,379	$ 238	$ 2,141
		Subtotal for Additional Site (Amendment No. 21)	**$ -**	**$ -**	**$ 38,068**	**$ 3,807**	**$ 34,261**
		CORE 1 AND REPEATER SITES (AMENDMENT NO. 3)					
B.1.14.6		Core 1 Hardware and Software	-	-	$ 11,645,162	$ 1,164,516	$ 10,480,646
		Core T1 Interface Equipment	-	-	$ 49,878	$ 4,988	$ 44,890
		NMS AC Power	-	-	$ 1,308	$ 131	$ 1,177
		FCC License Application Preparation	-	-	$ 7,500	$ 750	$ 6,750
		Remote Site AC Power	-	-	$ 7,848	$ 785	$ 7,063
B.3.2 to B.3.6		Five DTVRS UHF 11 Channel ASTRO 25 Sites	-	-	$ 1,144,758	$ 114,476	$ 1,030,282
B.3.2 to B.3.6		Three DTVRS 700 MHz 6 Channel ASTRO 25 Sites	-	-	$ 404,440	$ 40,444	$ 363,996
B.3.2 to B.3.6		Three MCC 7500 Consoles for DTVRS	-	-	$ 197,074	$ 19,707	$ 177,367
C.14		Portable Radio Upgrade Kits (2009 UASI Funds)	-	-	$ 65,800	$ 6,580	$ 59,220
C.14		Portable Radio Upgrade Kits (2010 UASI Funds)	-	-	$ 296,100	$ 29,610	$ 266,490
B.4.2.3		Installation, Optimization, Staging and Testing for Core 1 and Repeater Sites	-	-	$ 463,818	$ 46,382	$ 417,436
Base.22.3.2		Performance Bond for Core 1 and Repeater Sites	-	-	$ 89,801	$ -	$ 89,801
		Subtotal for Core 1 and Repeater Sites:	**$ -**	**$ -**	**$ 14,373,487**	**$ 1,428,369**	**$ 12,945,118**
		CORE 2 (AMENDMENT NO. 3)					
B.3.2 to B.3.6		Core 2 Hardware	-	-	$ 3,650,360	$ 365,036	$ 3,285,324
B.4.2.3		Installation, Optimization, Staging and Testing for Core 2	-	-	$ 301,757	$ 30,176	$ 271,581
Base.22.3.2		Performance Bond for Core 2	-	-	$ 24,663	$ -	$ 24,663
		LAPDVDC Uninterruptible Power Supply (UPS)					
		Eaton 9130 2000 Rackmount; 120V, 50/60Hz; 2000VA/1800W	-	-	$ 27,101	$ 2,710	$ 24,391
		Eaton 9130 2000/30000 EBM Rack	-	-	$ 12,152	$ 1,215	$ 10,937
		Two-Post Rack Mounting Rail Kit		-	$ 3,052	$ 305	$ 2,747
		Racks 7.5 Foot	-	-	$ 863	$ 86	$ 777
		MSI Design and Implementation Services	-	-	$ 24,978	$ 2,498	$ 22,480
		Subtotal for Core 2 and LAPDVDC UPS:	**$ -**	**$ -**	**$ 4,044,926**	**$ 402,026**	**$ 3,642,900**
		CORE 2 RELOCATION (AMENDMENT NO. 16)					
		~~Removal and Relocation of Core 2 from LAPDVDC to PLM~~			~~$ -~~	~~$ -~~	~~$ -~~
		Subtotal for Core 2 Relocation:			**$ -**	**$ -**	**$ -**
		SYSTEM ON WHEELS (AMENDMENT NO. 3)					
		System on Wheels (SOW)	-	-	$ -	$ -	$ -
		SOW - 95' MAST, 8' X 16' WALK-IN SHELTER	-	-	$ 468,439	$ 46,844	$ 421,595
		DTVRS - ASTRO Site Repeaters (ASR)	-	-	$ 408,816	$ 40,882	$ 367,934
		Core Licenses for 700/UHF ASR Sites	-	-	$ 127,748	$ 12,775	$ 114,973
		Mobile Meshed VSAT Satellite System & Installation	-	-	$ 126,233	$ 12,623	$ 113,610
		MSI Design and Implementation Services	-	-	$ 81,116	$ 8,112	$ 73,004
Base.22.3.2		Performance Bond for SOW	-	-	$ 6,345	$ -	$ 6,345
		Subtotal for System on Wheels:	**$ -**	**$ -**	**$ 1,218,697**	**$ 121,235**	**$ 1,097,462**
		STATION B EQUIPMENT (AMENDMENT NO. 4)					
		DTVRS - ASTRO Site Repeaters (ASR):	$ -	-	$ 585,803	$ 58,580	$ 527,223
		700 MHz ASR - 6 Channel (Phase 1/Phase 2)	$ -	-	$ -	$ -	$ -
		UHF ASR - 11 Channel (Phase 1/Phase 2)	$ -	-	$ -	$ -	$ -
		Core License Upgrades for ASR Sites	$ -	-	$ 149,548	$ 14,955	$ 134,593
		MOTOBRIDGE GX Communication Gateway	$ -	-	$ 174,329	$ 17,433	$ 156,896
		Point-To-Point 4.9 GHz Backhaul	$ -	-	$ 26,748	$ 2,675	$ 24,073
		Mobile Meshed VSAT Satellite System & Installation	$ -	-	$ 126,233	$ 12,623	$ 113,610
		MSI Design and Implementation Services	$ -	-	$ 99,820	$ 9,982	$ 89,838
Base.22.3.2		Performance Bond for Station B Equipment	$ -	-	$ 6,566	$ -	$ 6,566
		Subtotal for Station B Equipment:	**$ -**	**$ -**	**$ 1,169,047**	**$ 116,248**	**$ 1,052,799**
		PROJECT DESCRIPTIONS FOR BOUNDED AREA COVERAGE IN PHASE 1 (AMENDMENT NO. 2)					
B.1.14.1		Detailed Project Description for Bounded Area Coverage at the following Sites: (Note 4)					
		Century Plaza	-	-	$ 9,674	$ 967	$ 8,707
		LAC/HARBOR+UCLA MEDICAL CENTER	-	-	$ 11,674	$ 1,167	$ 10,507
		FS30	-	-	$ 11,674	$ 1,167	$ 10,507
		FS 51	-	-	$ 11,674	$ 1,167	$ 10,507

EXHIBIT C.2 - SCHEDULE OF PAYMENTS

PHASE 1 - SYSTEM DESIGN

Deliverable/Task/ Section No. (Exhibit A, Exhibit B, or Base Document)	Site ID	Deliverable	Unilateral Option Sum (Notes 3, 5, 6, 7, 8,9)	Credits (Note 11)	Contract Sum - Payable Amount for Phase 1 (Notes 3-22)	10% Holdback Amount	Payable Amount Less 10% Holdback
		FS 151	-	-	$ 11,674	$ 1,167	$ 10,507
		FS 164	-	-	$ 11,674	$ 1,167	$ 10,507
		FS 173	-	-	$ 11,674	$ 1,167	$ 10,507
		FS 005	-	-	$ 11,674	$ 1,167	$ 10,507
		FS 079	-	-	$ 11,674	$ 1,167	$ 10,507
		FS 084	-	-	$ 11,674	$ 1,167	$ 10,507
		FS 088	-	-	$ 11,674	$ 1,167	$ 10,507
		FS 095	-	-	$ 11,674	$ 1,167	$ 10,507
		Carson	-	-	$ 11,674	$ 1,167	$ 10,507
		San Pedro City Hall	-	-	$ 11,674	$ 1,167	$ 10,507
		West Hollywood Sheriff Station	-	-	$ 11,674	$ 1,167	$ 10,507
Total for Bounded Area Coverage Project Descriptions:			**$ -**	**$ -**	**$ 173,110**	**$ 17,311**	**$ 155,799**
PROJECT DESCRIPTIONS FOR POTENTIAL REPLACEMENT SITES (AMENDMENT NO. 9)							
B.1.14.1		Detailed Project Description for Potential Replacement Sites as follows:					
		Airport Courthouse (APC)	-	-	$ 11,674	$ 1,167	$ 10,507
		Beverly Hills' Coldwater Canyon Park (BHCCPRK)	-	-	$ 11,674	$ 1,167	$ 10,507
		Beverly Glen, Alternate Location (BVG-A)	-	-	$ 11,674	$ 1,167	$ 10,507
		Cerro Negro (CRN)	-	-	$ 11,674	$ 1,167	$ 10,507
		LA City Hall East (LAHE)	-	-	$ 11,674	$ 1,167	$ 10,507
		Loop Canyon (LPC)	-	-	$ 11,674	$ 1,167	$ 10,507
		Lower Encinal Pump Station (LAHE)	-	-	$ 11,674	$ 1,167	$ 10,507
		Mirador (MIR)	-	-	$ 11,674	$ 1,167	$ 10,507
		Point Vicente (PVC)	-	-	$ 11,674	$ 1,167	$ 10,507
		Portshead Tank (PWT)	-	-	$ 11,674	$ 1,167	$ 10,507
		Westlake City Hall (WLK)	-	-	$ 11,674	$ 1,167	$ 10,507
		Inglewood County Courthouse (ICC)	-	-	$ 11,674	$ 1,167	$ 10,507
		Pacific Design Center (PDC)	-	-	$ 11,674	$ 1,167	$ 10,507
		Simpsons' Building (SIM)	-	-	$ 11,674	$ 1,167	$ 10,507
		Burnt Peak-3 (BUR3)	-	-	$ 11,674	$ 1,167	$ 10,507
		Frost Peak (Upper Blue Ridge) (FRP)	-	-	$ 11,674	$ 1,167	$ 10,507
		Grass Mountain (GMT)	-	-	$ 11,674	$ 1,167	$ 10,507
		Johnstone Peak (JPK-2)	-	-	$ 11,674	$ 1,167	$ 10,507
		Josephine Peak (JOP)	-	-	$ 11,674	$ 1,167	$ 10,507
		Magic Mountain (MML)	-	-	$ 11,674	$ 1,167	$ 10,507
		Mount Lukens-2 (MTL2)	-	-	$ 11,674	$ 1,167	$ 10,507
		Pine Mountain (PMT)	-	-	$ 11,674	$ 1,167	$ 10,507
		Sunset Ridge-2 (SUN-2)	-	-	$ 11,674	$ 1,167	$ 10,507
		Helipad 69 Bravo (BRV)	-	-	$ 11,674	$ 1,167	$ 10,507
		Philip Water Tank (PWT)	-	-	$ 11,674	$ 1,167	$ 10,507
		Nicholas Canyon Water Tower (NCWT)	-	-	$ 11,674	$ 1,167	$ 10,507
Total for Project Descriptions for Potential Replacement Sites:			**$ -**	**$ -**	**$ 303,524**	**$ 30,352**	**$ 273,172**
PROJECT DESCRIPTIONS FOR POTENTIAL REPLACEMENT SITE(S) (AMENDMENT NO. 10)							
B.1.14.1		Detailed Project Description for Potential Replacement Site(s) as follows:					
		Agoura Hills (AGH)	-	-	$ 11,674	$ 1,167	$ 10,507
Total for Project Descriptions for Potential Replacement Sites:			**$ -**	**$ -**	**$ 11,674**	**$ 1,167**	**$ 10,507**
PROJECT DESCRIPTIONS FOR POTENTIAL REPLACEMENT SITE(S) (AMENDMENT NO. 11)							
B.1.14.1		Detailed Project Description for Potential Replacement Site(s) as follows:					
		Olinda	-	-	$ 11,674	$ 1,167	$ 10,507
		H-17A			$ 11,674	$ 1,167	$ 10,507
Total for Project Descriptions for Potential Replacement Sites:			**$ -**	**$ -**	**$ 23,348**	**$ 2,335**	**$ 21,013**
PROJECT DESCRIPTIONS FOR POTENTIAL REPLACEMENT SITE(S) (AMENDMENT NO. 15)							
B.1.14.1		Detailed Project Description for Potential Replacement Site(s) as follows:					
B.1.14.1	BHS	Baldwin Hills County			$ 11,674	$ 1,167	$ 10,507
~~B.1.14.1~~		~~Baldwin Hills -LA-RICS~~			~~$ -~~	~~$ -~~	~~$ -~~
B.1.14.1	BKK	BKK Landfill			$ 11,674	$ 1,167	$ 10,507
B.1.14.1	CCT	Criminal Court (Foltz)			$ 11,674	$ 1,167	$ 10,507
~~B.1.14.1~~	LASDTEM	~~Los Angeles County Sheriff Temple Station~~			~~$ -~~	~~$ -~~	~~$ -~~
B.1.14.1	DPW38	Los Angeles County Department of Public Works Pump Station 38			$ 11,674	$ 1,167	$ 10,507
B.1.14.1	PLM	Los Angeles County Palmdale Sheriff Station			$ 11,674	$ 1,167	$ 10,507
B.1.14.1	POM	Pomona Courthouse			$ 11,674	$ 1,167	$ 10,507
B.1.14.1	SPH	San Pedro Hill County			$ 11,674	$ 1,167	$ 10,507
B.1.14.1	UNIV	University of California Los Angeles			$ 11,674	$ 1,167	$ 10,507
B.1.14.1	VPK	Verdugo Peak			$ 11,674	$ 1,167	$ 10,507
Total for Project Descriptions for Potential Replacement Sites:			**$ -**	**$ -**	**$ 105,066**	**$ 10,507**	**$ 94,559**
PROJECT DESCRIPTION FOR POTENTIAL REPLACEMENT SITE (AMENDMENT NO. 16)							

EXHIBIT C.2 - SCHEDULE OF PAYMENTS

PHASE 1 - SYSTEM DESIGN

Deliverable/Task/ Section No. (Exhibit A, Exhibit B, or Base Document)	Site ID	Deliverable	Unilateral Option Sum (Notes 3, 5, 6, 7, 8,9)	Credits (Note 11)	Contract Sum - Payable Amount for Phase 1 (Notes 3-22)	10% Holdback Amount	Payable Amount Less 10% Holdback
		~~LACF134~~			~~$ -~~	~~$ -~~	~~$ -~~
		Total for System Redesign:			**$ -**	**$ -**	**$ -**
		PROJECT DESCRIPTION WORK (AMENDMENT NO. 18)					
	RPV1	Rancho Palos Verdes			$ 11,674	$ 1,167	$ 10,507
	~~SMMC~~	~~Santa Monica/UCLA Medical Center~~			~~$ -~~	~~$ -~~	~~$ -~~
	~~UCLA~~	~~UCLA (Factor Building)~~			~~$ -~~	~~$ -~~	~~$ -~~
	WWY	Winding Way			$ 11,674	$ 1,167	$ 10,507
		Total for Project Description Work:			**$ 23,348**	**$ 2,335**	**$ 21,013**
		LICENSE COORDINATION FEES FOR REPEATER SITES (AMENDMENT NO. 5)					
		License Coordination Fees	-	-	$ 20,240	$ -	$ 20,240
		Total for License Coordination Fees:	**$ -**	**$ -**	**$ 20,240**	**$ -**	**$ 20,240**
		PORTABLE RADIO EQUIPMENT, CONSOLETTES, & CONSOLES (AMENDMENT NO. 7)					
		APX 7000XE Portable Radios (450 Dual Band with UHF and 700 MHz Enabled and 150 Dual Band with UHF and VHF MHz Enabled) (Total Quantity 600) and Radio Accessories - Refer to Amendment 7, Attachment A.1, for specifications and a detailed cost breakdown	-	-	$ 4,459,044	$ -	$ 4,459,044
		Subscriber Maintenance for 600 APX 7000XE Portable Radios Beyond Initial 5 Year Warranty Period (Year 6, Year 7, Year 8 at $37,800 per year) (Service from the Start - LITE)	-	-	$ 113,400		$ 113,400
		APX Consolette/APX 7500 Control Station - Refer to Amendment 7, Attachment A.2, for specifications and a detailed cost breakdown.	-	-	$ 216,215	$ -	$ 216,215
		Subscriber Maintenance for 20 APX7500 Control Stations Beyond the Initial 5 Year Warranty Period (Year 6, Year 7, Year 8 at $1,908 per year) (Service from the Start - LITE)	-	-	$ 5,724	$ -	$ 5,724
		Subscriber Maintenance for 10 APX 7500 Consolettes Beyond the Initial 5 Year Warranty Period (Year 6, Year 7, Year 8 at $954 per year) (Service from the Start - LITE)	-	-	$ 2,862	$ -	$ 2,862
		MC7500 Console - Refer to Amendment 7, Attachment A.3, for specifications and a detailed cost breakdown.	-	-	$ 354,313	$ -	$ 354,313
		Bridge Warranty for NMS & Console Equipment - Refer to Amendment 7, Attachment A.3, for specifications and a detailed cost breakdown.	-	-	$ 25,493	$ -	$ 25,493
		Total for Portable Radio Equipment, Consolettes, & Consoles:	**$ -**	**$ -**	**$ 5,177,051**	**$ -**	**$ 5,177,051**
		PORTABLE RADIO EQUIPMENT (AMENDMENT NO. 8)					
		APX 7000XE Portable Radios (400 Dual Band with UHF and 700 MHz Enabled and 54 Dual Band with UHF and VHF MHz Enabled) (Total Quantity 454) and Radio Accessories - Refer to Amendment 8, Attachment A, for specifications and a detailed cost breakdown	-	-	$ 3,571,755	$ -	**$ 3,571,755**
		5 Year Warranty Period (Year 6, Year 7, Year 8 at $28,602 per year) (Service	-	-	$ 85,806	$ -	**$ 85,806**
		Performance Bond for Portable Radio Equipment	-	-	$ 13,445	$ -	**$ 13,445**
		Total for Portable Radio Equipment:	**$ -**	**$ -**	**$ 3,671,006**	**$ -**	**$ 3,671,006**
		POWER LOAD STUDY COSTS (AMENDMENT NO. 10)					
2.2.16		Power Load Study Cost(s)					
		Airport Courthouse (APC)			$ 8,425	$ -	$ 8,425
		Inglewood Courthouse (ICC)			$ 8,425		$ 8,425
		Total for Power Load Study Costs:	**$ -**	**$ -**	**$ 16,850**	**$ -**	**$ 16,850**
		FCC LICENSING (AMENDMENT NO. 12)					
B.1.6		FCC Licensing - Frequency Planning	-	-	$ 284,041	$ 28,404	$ 255,637
		Licensing all LMR Subsystem Frequencies at all LMR Subsystem Sites	-	-	$ 51,348	$ 5,135	$ 46,213
		RF Engineering Services	-	-	$ 73,728	$ 7,373	$ 66,355
		Project Manangement Services for FCC Licensing	-	-	$ 14,000	$ 1,400	$ 12,600
		Total for FCC Licensing:	**-**	**-**	**$ 423,117**	**$ 42,312**	**$ 380,805**
		SPECIFIED EQUIPMENT BRIDGE WARRANTY (AMENDMENT NO. 12)					
		SOW	-	-	$ 57,720	$ -	$ 57,720
		UHF Stations	-	-	$ -	$ -	$ -
		700 MHz Stations	-	-	$ -	$ -	$ -
		Satellite Terminal	-	-	$ -	$ -	$ -
		PTP800 Backhaul	-	-	$ -	$ -	$ -
		Motobridge	-	-	$ -	$ -	$ -
		Station B	-	-	$ 44,853	$ -	$ 44,853
		UHF Stations	-	-	$ -	$ -	$ -
		700 MHz Stations	-	-	$ -	$ -	$ -
		Trailer	-	-	$ -	$ -	$ -
		Satellite Terminal	-	-	$ -	$ -	$ -
		PTP800 Backhaul	-	-	$ -	$ -	$ -
		Motobridge	-	-	$ -	$ -	$ -
		Early Equipment Shipment	-	-	$ 351,772	$ -	$ 351,772

EXHIBIT C.2 - SCHEDULE OF PAYMENTS

PHASE 1 - SYSTEM DESIGN

Deliverable/Task/ Section No. *(Exhibit A, Exhibit B, or Base Document)*	Site ID	Deliverable	Unilateral Option Sum (Notes 3, 5, 6, 7, 8,9)	Credits (Note 11)	Contract Sum - Payable Amount for Phase 1 (Notes 3-22)	10% Holdback Amount	Payable Amount Less 10% Holdback
		Core 1 & Repeater Sites	-	-	$ -	$ -	$ -
		Core 2 Equipment	-	-	$ 189,992	$ -	$ 189,992
Base.22.3.2		Performance Bond for Specified Equipment Bridge Warranty	-	-	$ 3,196	$ -	$ 3,196
Total for Specified Equipment Bridge Warranty:			**-**	**-**	**$ 647,533**	**$ -**	**$ 647,533**
PORTABLE RADIO EQUIPMENT (AMENDMENT NO. 12)							
		APX 7000XE Portable Radios (40 Dual Band with UHF and 700 MHz Enabled) (Total Quantity 40) and Radio Accessories - Refer to Amendment 7, Attachment A, for specifications and a detailed cost breakdown	-	-	$ 333,005	$ -	$ 333,005
		Subscriber Maintenance for 40 APX 7000XE Portable Radios Beyond Initial 5 Year Warranty Period (Year 6, Year 7, Year 8 at $2,520 per year) (Service from the Start - LITE)	-	-	$ 7,560	$ -	$ 7,560
		APX 7500 Console and (Dual Band with UHF and 700 MHz Enabled) (Total Quantity 4) and Remote Control HD/CHIB Replacement - Refer to Amendment 12, Attachment A, for specifications and a detailed cost breakdown	-	-	$ 36,732	$ -	$ 36,732
		APX 7500 Control Station (Dual Band with UHF and 700 MHz Enabled) (Total Quantity 1) - Refer to Amendment 12, Attachment A, for specifications and a detailed cost breakdown	-	-	$ 7,506	$ -	$ 7,506
		Subscriber Maintenance for 4 APX 7500 Consoles and 1 APX 7500 Control Station Beyond the Initial 5 Year Warranty Period (Year 6, Year 7, Year 8 at $477 per year) (Service from the Start - LITE)	-	-	$ 1,431	$ -	$ 1,431
Total for Portable Radio Equipment					**$ 386,234**		**$ 386,234**
LEASE EXHIBIT (AMENDMENT NO. 13)							
		~~Baldwin Hills~~			~~$ -~~	~~$ -~~	~~$ -~~
		~~Black Jack Peak~~			~~$ -~~	~~$ -~~	~~$ -~~
		~~Bald Mountain~~			~~$ -~~	~~$ -~~	~~$ -~~
		~~Compton Court Building~~			~~$ -~~	~~$ -~~	~~$ -~~
		~~Claremont~~			~~$ -~~	~~$ -~~	~~$ -~~
		~~Castro Peak~~			~~$ -~~	~~$ -~~	~~$ -~~
		~~Dakin Peak~~			~~$ -~~	~~$ -~~	~~$ -~~
		~~Encinal 1 (Fire Camp)~~			~~$ -~~	~~$ -~~	~~$ -~~
		~~L.A. County Fire Command~~			~~$ -~~	~~$ -~~	~~$ -~~
		~~Green Mountain~~			~~$ -~~	~~$ -~~	~~$ -~~
		~~Hauser Peak~~			~~$ -~~	~~$ -~~	~~$ -~~
		~~Mira Loma Facility~~			~~$ -~~	~~$ -~~	~~$ -~~
		~~Mount McDill~~			~~$ -~~	~~$ -~~	~~$ -~~
		~~Monte Vista (Star Center)~~			~~$ -~~	~~$ -~~	~~$ -~~
		~~Oat Mountain~~			~~$ -~~	~~$ -~~	~~$ -~~
		~~Oat Mountain Nike~~			~~$ -~~	~~$ -~~	~~$ -~~
		~~Puente Hills~~			~~$ -~~	~~$ -~~	~~$ -~~
		~~Pomona 1620 Hillcrest~~			~~$ -~~	~~$ -~~	~~$ -~~
		~~Rolling Hills Transmit~~			~~$ -~~	~~$ -~~	~~$ -~~
		~~Rio Hondo~~			~~$ -~~	~~$ -~~	~~$ -~~
		~~San Dimas~~			~~$ -~~	~~$ -~~	~~$ -~~
		~~Signal Hill~~			~~$ -~~	~~$ -~~	~~$ -~~
		~~Saddle Peak~~			~~$ -~~	~~$ -~~	~~$ -~~
		~~Topanga Peak~~			~~$ -~~	~~$ -~~	~~$ -~~
		~~Tejon Peak~~			~~$ -~~	~~$ -~~	~~$ -~~
		~~Tower Peak~~			~~$ -~~	~~$ -~~	~~$ -~~
		~~100 Wilshire~~			~~$ -~~	~~$ -~~	~~$ -~~
		~~Airport Courthouse~~			~~$ -~~	~~$ -~~	~~$ -~~
		~~Olinda~~			~~$ -~~	~~$ -~~	~~$ -~~
		Total for Lease Exhibit			~~**$ -**~~	~~**$ -**~~	~~**$ -**~~
STATION B & SOW REPROGRAMMING (AMENDMENT NO. 14)							
		Equipment			$ 15,260		$ 15,260
		MSI Design and Implementation Services			$ 43,848		$ 43,848
		Special Temporary Authority			$ 5,148		$ 5,148
		Total for Station B & Sow Reprogramming			**$ 64,256**	**$ -**	**$ 64,256**
SYSTEM REDESIGN (AMENDMENT NO. 16)							
		LMR System Redesign			$ 1,054,440	$ -	$ 1,054,440
Total for System Redesign:					**$ 1,054,440**	**$ -**	**$ 1,054,440**
3D MODELING (AMENDMENT NO. 20)							
		3D Modeling			$ 6,534	$ 653	$ 5,881
Total for Phase 3 Credits:					$ 6,534	$ 653	$ 5,881
ADAPTERS FOR DISPATCHER HEADSETS FOR COMPATABILITY WITH CONSOLETTES (AMENDMENT NO. 23)							

EXHIBIT C.2 - SCHEDULE OF PAYMENTS

PHASE 1 - SYSTEM DESIGN

Deliverable/Task/ Section No. (Exhibit A, Exhibit B, or Base Document)	Site ID	Deliverable	Unilateral Option Sum (Notes 3, 5, 6, 7, 8,9)	Credits (Note 11)	Contract Sum - Payable Amount for Phase 1 (Notes 3-22)	10% Holdback Amount	Payable Amount Less 10% Holdback
		Adapters for Dispatcher Headsets for Compatability with Consolette Desk Radios (6 at $158 Each)			$ 948	$ 95	$ 853
Total for Adapters for Dispatcher Headset for Compatability with Consolette Desk Radios:					$ 948	$ 95	$ 853
LA-RICS Uninterruptible Power Supply (UPS) EQUIPMENT REMOVAL (AMENDMENT NO. 34 and AMENDMENT NO. 35)							
		Removal of LA-RICS UPS equipment located at the LAPDVDC site			$ 6,611	$ -	$ 6,611
Total for LA-RICS Uninterruptible Power Supply (UPS) Equipment Removal:					$ 6,611	$ -	$ 6,611
Early Deployment/Specified Equipment Bridge Warranty Extension (AMENDMENT NO. 34 and AMENDMENT NO. 35)							
		Bridge Warranty Extension for the Early Deployment/Specified Equipment			$ 430,800	$ -	$ 430,800
Total for Early Deployment/Specified Equipment Bridge Warranty Extension:					$ 430,800	$ -	$ 430,800
Total for Phase 1 - System Design			**$ -**	**$ -**	**$ 43,400,362**	**$ 3,124,069**	**$ 40,276,293**

Note 1: Should a Site fall out for permitting reasons, Contractor will redo the Final System Design at no charge to the Authority.

Note 2: 75% will occur at submittal for planning review. The remaining 25% will be paid upon receipt of construction permit.

Note 3: Pursuant to Amendment No. One, effective as of September 5, 2013, the Authority exercised the Unilateral Option for all work pertaining to Phase 1. In connection therewith, the Unilateral Option Sum for Phase 1 of $29,266,721 was converted into a Contract Sum.

Note 4: Pursuant to Amendment No. Two, effective as of October 29, 2013, the Authority exercised the Unilateral Option for all work pertaining to Bounded Area Coverage Project Descriptions for Phase 1. In connection therewith, the Unilateral Option Sum for Bounded Area Coverage Project Descriptions for Phase 1 in the amount of $173, 110 was converted into a Contract Sum. The cost for the Project Descriptions for the Bounded Area Coverage only are reflected in Exhibit C.2 (Phase 1 - System Design) as amended and restated in Amendment No. 2. The balance of the remaining Unilateral Option Sum for Bounded Area Coverage Additive Alternate is reflected in Exhibit C.7 (Bounded Area Coverage Additive Alternate).

Note 5: Pursuant to Amendment No. Three, effective as of December 19, 2013, (a) Contractor's provision and implementation of certain equipment reflected in Exhibit C.2 (Schedule of Payments Phase 1 – System Design) to Exhibit C (Schedule of Payments), as amended by Amendment No. Three, was moved from Phases 3 and 4 to Phase 1; and (b) Contractor was engaged to provide and implement under Phase 1, certain additional equipment reflected in Exhibit C.2 (Schedule of Payments Phase 1 – System Design) to Exhibit C (Schedule of Payments), as amended by Amendment No. Three, (the equipment described in clauses (a) and (b) is collectively referred to as the "Specified Equipment"). Implementation) to Exhibit C (Schedule of Payments) to Schedule C.2 (Schedule of Payments Phase 1 – System Design) to Exhibit C (Schedule of Payments), as amended by Amendment No. Three, and thereafter such Unilateral Option Sum was converted to a Contract Sum; and (ii) a Unilateral Option Sum in the amount of $1,285,230 was added to Schedule C.2 (Schedule of Payments Phase 1 – System Design) to Exhibit C (Schedule of Payments), as amended by Amendment No. Three, and thereafter such Unilateral Option Sum was converted to a Contract Sum.

Note 6: Pursuant to Amendment No. Four, effective as of December 19, 2013, Contractor was engaged to provide and implement under Phase 1, certain additional equipment and related services reflected in Exhibit C.1 (Schedule of Payments Phase 1 – System Design) to Exhibit C (Schedule of Payments), as amended by Amendment No. Four. In connection therewith, a Unilateral Option Sum in the amount of $1,169,047 was added to Exhibit C.1 (Schedule of Payments Phase 1 – System Design) to Exhibit C (Schedule of Payments), as amended by Amendment No. Four, and thereafter such Unilateral Option Sum was converted to a Contract Sum.

Note 7: Pursuant to Amendment No. Five, effective as of March 27, 2014, license coordination fees for the Repeater Sites were reflected in Exhibit C.1 (Schedule of Payments Phase 1 – System Design) to Exhibit C (Schedule of Payments), as amended by Amendment No. Five. In connection therewith, a Unilateral Option Sum in the amount of $20,240 was added to Exhibit C.1 (Schedule of Payments Phase 1 – System Design) to Exhibit C (Schedule of Payments), as amended by Amendment No. Five, and thereafter such Unilateral Option Sum was converted to a Contract Sum.

Note 8: Pursuant to Amendment No. Six, effective as of April 17, 2014, the enhancement of LAPDVDC's UPS to accommodate the installation and deployment of Core 2 was reflected in Exhibit C.1 (Schedule of Payments Phase 1 – System Design) to Exhibit C (Schedule of Payments), as amended by Amendment No. Six. In connection therewith, a Unilateral Option Sum in the amount of $68,146 was added to Exhibit C.1 (Schedule of Payments Phase 1 – System Design) to Exhibit C (Schedule of Payments), as amended by Amendment No. Six, and thereafter such Unilateral Option Sum was converted to a Contract Sum.

Note 9: Pursuant to Amendment No. Seven, effective as of May 8, 2014, Exhibit C.1 (Schedule of Payments Phase 1 – System Design) to Exhibit C (Schedule of Payments) was revised to reflect the costs for the purchase of portable radios, radio accessories, consolettes, and consoles. In connection therewith, a Unilateral Option Sum in the amount of $5,177,051 was added to Exhibit C.1 (Schedule of Payments Phase 1 – System Design) to Exhibit C (Schedule of Payments), as amended by Amendment No. Seven, and thereafter such Unilateral Option Sum was converted to a Contract Sum.

Note 10: Pursuant to Amendment No. Eight, effective as of August 28, 2014, Exhibit C.1 (Schedule of Payments Phase 1 – System Design) to Exhibit C (Schedule of Payments) was revised to reflect the costs for the purchase of portable radios and radio accessories. In connection therewith, a Unilateral Option Sum in the amount of $3,671,006 was added to Exhibit C.1 (Schedule of Payments Phase 1 – System Design) to Exhibit C (Schedule of Payments), as amended by Amendment No. Eight, and thereafter such Unilateral Option Sum was converted to a Contract Sum.

Note 11: Pursuant to Amendment No. Nine, effective November 19, 2014, the Authority removed 1 LMR System Site for Phases 1 through 4. As such, Credits were realized in the amount of $646,001. However, the cost for preparing Project Descriptions for 26 potentail replacement sites in the amount of $303,524 was utilized in Phase 1. As such, the remaining Credit balance of $342,477 is reserved for use for a future replacement site.

Note 12: Pursuant to Amendment No. Ten, effective February 17, 2015, Exhibit C.1 (Schedule of Prices - System Design) was amended by Amendment No. 10 to reflect the conversion of Unilateral Option Sum to Contract Sum for (a) the addition of five (5) LMR System Sites; (b) the removal of four (4) sites; (c) Project Description Work for one (1) potential sites; and (d) the cost of power load studies for two (2) sites.

Note 13: Pursuant to Amendment No. Eleven, effective April 28, 2015, Exhibit C.1 (Schedule of Prices - System Design) was amended by Amendment No. 11 to reflect Project Description Work for two (2) potential sites.

Note 14: Pursuant to Amendment No. Twelve, effective August 27, 2015, Exhibit C.1 (Schedule of Prices - System Design) was amended by Amendment No. 12 to reflect the shiftng of FCC Licensing costs from Phase 3 in the amount of $284,041; increasing the FCC Licensing costs for enhanced scope by $139,076; including costs for a bridge warranty for Specified Equipment in the amount of $647,533; and purchasing portable radio equipment in the amount of $386,234.

Note 15: Pursuant to Amendment No. Thirteen, effective October 30, 2015, Exhibit C.2 (Schedule of Prices - System Design) was amended by Amendment No. 13 to reflect the addition of lease exhibits to twenty-nine (29) LMR System Sites for a total cost of $14,888.

Note 16: Pursuant to Amendment No. Fourteen, effective November 17, 2015, Exhibit C.2 (Schedule of Prices - System Design) was amended by Amendment No. 14 to reflect the work related to reprogrammingof UHF frequencies for the County of Los Angeles Sheriff's Department' Station B and the Authority's System On Wheels for a total of $64,256.

Note 17: Pursuant to Amendment No. Fifteen effective December 22, 2015, Exhibit C.1 (Schedule of Prices - System Design) was amended by Amendment No. 15 to reflect Project Description Work for eleven (11) potential sites, for a total cost of $128,414.

Note 18: Pursuant to Amendment No. Sixteen effective December 23, 2015, Exhibit C.1 (Schedule of Prices - System Design) was amended by Amendment No. 16 to reflect (a) removal of thirty-one (31) LMR System Sites resulting in credits in the amount of $1,132,374 for Phase 1 only; (2) addition of seventeen (17) LMR System Sites in the amount of $635,537 which will be taken from the credited amount of $1,132,374, bringing the total amount of credits down to $363,599 (inclusive of Phase 1 Work performed for 75% drawings and building permits in the amount of $133,238) and shall be reflected in the Whitaker Middle Peak site in Phase 3; (c) account for a comprehensive redesign of the LMR System and all associated Work for an increase in the amount of $1,054,440; and (d) reflect the removal, relocation, and deployment of the LMR System Core 2 equipment from Los Angeles Police Department Valley Dispatch Center (LAPDVDC) to Palmdale Sheriff Station (PLM) and necessary associated Work in the amount of $499,912.

Note 19: Pursuant to Amendment No. Seventeen, four (4) LMR System Sites were removed from further consideration and two (2) LMR System Sites were included as part of the LMR System. In connection therewith, Unilateral Option Sums were converted into Contract Sums.

Note 20: Pursuant to Amendment No. Eighteen, eight (8) LMR System Sites were added and included as part of the LMR System. In connection therewith, Unilateral Option Sums for the eight (8) LMR System Sites were converted into Contract Sums. Also, Project Description Work was performed on four (4) of the eight (8) LMR System Sites added to Amendment No. Eighteen.

EXHIBIT C.2 - SCHEDULE OF PAYMENTS

PHASE 1 - SYSTEM DESIGN

Deliverable/Task/ Section No. *(Exhibit A, Exhibit B, or Base Document)*	Site ID	Deliverable	Unilateral Option Sum (Notes 3, 5, 6, 7, 8,9)	Credits (Note 11)	Contract Sum - Payable Amount for Phase 1 (Notes 3-22)	10% Holdback Amount	Payable Amount Less 10% Holdback

Note 21: Pursuant to Amendment No. Nineteen, one (1) LMR System Site was removed from further consideration in Phases 1-4. Also, two (2) LMR System Sites were reconciled in Phases 2-4.

Note 22: Pursuant to Amendment No. Thurty-Two, two (2) LMR System Site was removed from further consideration in Phases 1-4.

EXHIBIT C.3 - SCHEDULE OF PAYMENTS
PHASE 2 - SITE CONSTRUCTION AND SITE MODIFICATION

Deliverable/ Task/ Section No. (Exhibit A, Exhibit B, or Base Document)	Site ID	Deliverable (Refer to Site Development Matrix in Exhibit B for further detailes on the capacity and sizes of site components)	Phase 2 Total						
			Qty.	Unilateral Option Sum for Site Construction Only	Unilateral Option Sum Incuding Project Management	Credits (Note 1)	Contract Sum - Payable Amount for Phase 2 (Note 1,2,3,4,5)	10% Holdback Amount	Payable Amount Less 10% Holdback
B.2.2		**Site Construction**							
~~B.2.2~~	~~BAH~~	~~Baldwin Hills~~		$ -	$ -	$ -	$ -	$ -	$ -
B.2.2	BJM	Black Jack Peak		$ -	$ -	$ -	$ 1,146,012	$ 114,601	$ 1,031,411
B.2.2	BMT	Bald Mountain		$ -	$ -	$ -	$ 453,781	$ 45,378	$ 408,403
B.2.2	~~BRK~~	~~Blue Rock~~		$ -	$ -	$ -	$ -	$ -	$ -
B.2.2	~~BUR~~	~~Burnt Peak~~		$ -	$ -	$ -	$ -	$ -	$ -
~~B.2.2~~	~~BVG~~	~~Beverly Glen~~		$ -	$ -	$ -	$ -	$ -	$ -
B.2.2	CCB	Compton Court Building		$ -	$ -	$ -	$ 451,517	$ 45,152	$ 406,365
~~B.2.2~~	~~CEP~~	~~Century Plaza~~		$ -	$ -	$ -	$ -	$ -	$ -
B.2.2	CLM	Claremont		$ -	$ -	$ -	$ 7,780	$ 778	$ 7,002
B.2.2	CPK	Castro Peak		$ -	$ -	$ -	$ 641,071	$ 64,107	$ 576,964
B.2.2	DPK	Dakin Peak		$ -	$ -	$ -	$ 620,065	$ 62,006	$ 558,058
~~B.2.2~~	~~ELSGDPD~~	~~El Segundo PD~~		$ -	$ -	$ -	$ -	$ -	$ -
~~B.2.2~~	~~ENC1~~	~~Encinal1 Fire Camp~~		~~$ -~~	~~$ -~~	~~$ -~~	~~$ (0)~~	~~$ (0)~~	~~$ (0)~~
B.2.2	GRM	Green Mountain		$ -	$ -	$ -	$ 625,114	$ 62,511	$ 562,603
B.2.2	HPK	Hauser Peak		$ -	$ -	$ -	$ 599,484	$ 59,948	$ 539,536
~~B.2.2~~	~~JPK~~	~~Johnstone Peak~~		~~$ -~~	~~$ -~~	~~$ -~~	~~$ 0~~	~~$ 0~~	~~$ 0~~
~~B.2.2~~	~~LACF028~~	~~FS 28~~		$ -	$ -	$ -	$ -	$ -	$ -
~~B.2.2~~	~~LACF056~~	~~FS 56~~		$ -	$ -	$ -	$ -	$ -	$ -
~~B.2.2~~	~~LACF071~~	~~FS 71~~		$ -	$ -	$ -	$ -	$ -	$ -
B.2.2	LACF072	FS 72				$ -	$ 524,184	$ 52,418	$ 471,766
~~B.2.2~~	~~LACF077~~	~~FS 77~~		$ -	$ -	$ -	$ -	$ -	$ -
~~B.2.2~~	~~LACF084~~	~~LACF84~~		$ -	$ -	$ -	$ -	$ -	$ -
B.2.2	LACF091	FS 91		$ -	$ -	$ -	$ 358,453	$ 35,845	$ 322,608
~~B.2.2~~	~~LACF099~~	~~FS99~~		$ -	$ -	$ -	$ -	$ -	$ -
~~B.2.2~~	~~LACF119~~	~~FS 119~~		$ -	$ -	$ -	$ -	$ -	$ -
~~B.2.2~~	~~LACF144~~	~~FS 144~~		$ -	$ -	$ -	$ -	$ -	$ -
~~B.2.2~~	~~LACF149~~	~~FS 149~~		$ -	$ -	$ -	$ -	$ -	$ -
~~B.2.2~~	~~LACF157~~	~~FS 157~~		$ -	$ -	$ -	$ -	$ -	$ -
~~B.2.2~~	~~LACF196~~	~~FS 169~~		$ -	$ -	$ -	$ -	$ -	$ -
~~B.2.2~~	~~LACFCP09~~	~~LACFCP09~~		$ -	$ -	$ -	$ -	$ -	$ -
B.2.2	LACFDEL	Los Angeles County Fire Deparmental Del Valle Training Camp		$ -	$ -	$ -	$ 536,490	$ 53,649	$ 482,841
~~B.2.2~~	~~LAH~~	~~LA City Hall~~		$ -	$ -	$ -	$ -	$ -	$ -
~~B.2.2~~	~~LBR~~	~~Lower Blue Ridge~~		$ -	$ -	$ -	$ -	$ -	$ -
B.2.2	LDWP243	DWP Sylmar Water Ladder		$ -	$ -	$ -	$ 213,691	$ 21,369	$ 192,322
~~B.2.2~~	~~MAM~~	~~Magic Mountain~~		$ -	$ -	$ -	$ -	$ -	$ -
B.2.2	MDI	Mount Disappointment		$ -	$ -	$ -	$ 770,946	$ 77,095	$ 693,851
~~B.2.2~~	~~MLE~~	~~Mount Lee~~		~~$ -~~	~~$ -~~	~~$ -~~	~~$ 0~~	~~$ 0~~	~~$ 0~~
B.2.2	MLM	Mira Loma Facility		$ -	$ -	$ -	$ 574,787	$ 57,479	$ 517,308
B.2.2	MMC	Mount McDill		$ -	$ -	$ -	$ 735,075	$ 73,507	$ 661,567
~~B.2.2~~	~~MTL~~	~~Mount Lukens~~		$ -	$ -	$ -	$ -	$ -	$ -
~~B.2.2~~	~~MTT~~	~~Mt Thom~~		$ -	$ -	$ -	$ -	$ -	$ -
~~B.2.2~~	~~MTW~~	~~Mount Washington~~		$ -	$ -	$ -	$ -	$ -	$ -
B.2.2	MVS	Monte Vista (Star Center)		$ -	$ -	$ -	$ 312,077	$ 31,208	$ 280,870
B.2.2	OAT	Oat Mountain OAT		$ -	$ -	$ -	$ 507,627	$ 50,763	$ 456,864
~~B.2.2~~	~~OMC~~	~~Oat Mountain OMC~~		$ -	$ -	$ -	$ -	$ -	$ -
B.2.2	ONK	Oat Mountain Nike		$ -	$ -	$ -	$ 544,369	$ 54,437	$ 489,932
B.2.2	PHN	Puente Hills		$ -	$ -	$ -	$ 205,959	$ 20,596	$ 185,363
B.2.2	PRG	Portal Ridge		$ -	$ -	$ -	$ 739,261	$ 73,926	$ 665,335
~~B.2.2~~	~~PSH~~	~~Pomona 1620 Hillcrest~~		~~$ -~~	~~$ -~~	~~$ -~~	~~$ -~~	~~$ -~~	~~$ -~~
~~B.2.2~~	~~RDNBPD~~	~~Redondo Beach PD~~		$ -	$ -	$ -	$ -	$ -	$ -
B.2.2	RHT	Rolling Hills Transmit		$ -	$ -	$ -	$ 735,910	$ 73,591	$ 662,319
B.2.2	RIH	Rio Hondo		$ -	$ -	$ -	$ 755,872	$ 75,587	$ 680,285
~~B.2.2~~	~~RPVE001~~	~~Rancho Palos Verde City Hall~~		$ -	$ -	$ -	$ -	$ -	$ -
~~B.2.2~~	~~SAG~~	~~San Augustine~~		$ -	$ -	$ -	$ -	$ -	$ -
B.2.2	SDW	San Dimas		$ -	$ -	$ -	$ 679,371	$ 67,937	$ 611,434
B.2.2	SGH	Signal Hill		$ -	$ -	$ -	$ 350,623	$ 35,062	$ 315,561
~~B.2.2~~	~~SPC~~	~~San Pedro Hill~~		$ -	$ -	$ -	$ -	$ -	$ -
B.2.2	SPN	Saddle Peak		$ -	$ -	$ -	$ 438,967	$ 43,897	$ 395,071
B.2.2	SUN	Sunset Ridge		$ -	$ -	$ -	$ 433,020	$ 43,302	$ 389,718
~~B.2.2~~	~~SVP~~	~~San Vicente Peak~~		$ -	$ -	$ -	$ -	$ -	$ -
~~B.2.2~~	~~SWP~~	~~Southwest Area Station~~		$ -	$ -	$ -	$ -	$ -	$ -
B.2.2	TOP	Topanga Peak		$ -	$ -	$ -	$ 559,263	$ 55,926	$ 503,337
B.2.2	TPK	Tejon Peak		$ -	$ -	$ -	$ 590,720	$ 59,072	$ 531,648
B.2.2	TWR	Tower Peak		$ -	$ -	$ -	$ 623,539	$ 62,354	$ 561,185
~~B.2.2~~	~~VPC~~	~~Verdugo Peak (city)~~		$ -	$ -	$ -	$ -	$ -	$ -
~~B.2.2~~	~~WAD~~	~~Walker Drive~~		$ -	$ -	$ -	$ -	$ -	$ -
B.2.2	WMP	Whitaker Middle Peak		$ -	$ -	$ -	$ 591,434	$ 59,143	$ 532,291
B.2.2	WS1	100 Wilshire		$ -	$ -	$ -	$ 185,718	$ 18,572	$ 167,146
B.2.2	WTR	Whitaker Ridge		$ -	$ -	$ -	$ 629,583	$ 62,958	$ 566,625
~~B.2.2~~	~~LAPD077~~	~~77TH Street Area Complex~~		$ -	$ -	$ -	$ -	$ -	$ -
~~B.2.2~~	~~LAPDDVN~~	~~Devonshire Area station~~		$ -	$ -	$ -	$ -	$ -	$ -
B.2.2	FCCF	L A County Fire Command		$ -	$ -	$ -	$ 186,715	$ 18,671	$ 168,043
~~B.2.2~~	~~LAPDVDC~~	~~Valley Dispatch Center~~		$ -	$ -	$ -	$ -	$ -	$ -
Subtotal for Site Construction and Modifications Site Detail				**$ -**	**$ -**	**$ -**	**$ 17,328,478**	**$ 1,732,848**	**$ 15,595,630**
ADDITIONAL SITES (AMENDMENT NO. 10)									

AGENDA ITEM J - ENCLOSURE

EXHIBIT C.3 - SCHEDULE OF PAYMENTS
PHASE 2 - SITE CONSTRUCTION AND SITE MODIFICATION

Deliverable/ Task/ Section No. (Exhibit A, Exhibit B, or Base Document)	Site ID	Deliverable (Refer to Site Development Matrix in Exhibit B for further detailes on the capacity and sizes of site components)	Phase 2 Total						
			Qty.	Unilateral Option Sum for Site Construction Only	Unilateral Option Sum Incuding Project Management	Credits (Note 1)	Contract Sum - Payable Amount for Phase 2 (Note 1,2,3,4,5)	10% Holdback Amount	Payable Amount Less 10% Holdback
B.2.2		**Site Construction**							
B.2.2	APC	Airport Courthouse		$ -	$ -	$ -	$ 152,578	$ 15,258	$ 137,320
~~B.2.2~~	~~BCHCPRK~~	~~Beverly Hills' Coldwater Canyon Park~~		$ -	$ -	$ -	$ -	$ -	$ -
~~B.2.2~~	~~LACF136~~	~~FS 136~~		$ -	$ -	$ -	$ -	$ -	$ -
~~B.2.2~~	~~LAHE~~	~~LA City Hall East~~		$ -	$ -	$ -	$ -	$ -	$ -
~~B.2.2~~	~~OLI~~	~~Olinda~~		~~$ -~~	~~$ -~~	~~$ -~~	~~$ -~~	~~$ -~~	~~$ -~~
Subtotal for Additional Sites (Amendment No. 10)				**$ -**	**$ -**	**$ -**	**$ 152,578**	**$ 15,258**	**$ 137,320**
ADDITIONAL SITES (AMENDMENT NO. 17)									
B.2.2		**Site Construction**							
B.2.2	AGH	Agoura Hills		$ -	$ -	$ -	$ 532,096	$ 53,210	$ 478,886
B.2.2	BUR1	Burnt Peak 1		$ -	$ -	$ -	$ 720,568	$ 72,057	$ 648,511
B.2.2	CCT	Criminal Court (Foltz)		$ -	$ -	$ -	$ 555,734	$ 55,573	$ 500,161
B.2.2	CRN	Cerro Negro		$ -	$ -	$ -	$ 557,562	$ 55,756	$ 501,806
B.2.2	FRP	Frost Peak (Upper Blue Ridge)		$ -	$ -	$ -	$ 760,736	$ 76,074	$ 684,662
B.2.2	GMT	Grass Mountain		$ -	$ -	$ -	$ 2,021,991	$ 202,199	$ 1,819,792
B.2.2	H-17A	H-17 Helipad		$ -	$ -	$ -	$ 358,453	$ 35,845	$ 322,608
B.2.2	LARICSHQ	LA-RICS Headquarters		$ -	$ -	$ -	$ 27,508	$ 2,751	$ 24,757
B.2.2	LASDTEM	Los Angeles County Sheriff's Department Temple Station		$ -	$ -	$ -	$ 297,580	$ 29,758	$ 267,822
B.2.2	LPC	Loop Canyon		$ -	$ -	$ -	$ 475,498	$ 47,550	$ 427,948
B.2.2	LEPS	Lower Encinal Pump Station		$ -	$ -	$ -	$ 451,070	$ 45,107	$ 405,963
B.2.2	MIR	Mirador		$ -	$ -	$ -	$ 412,858	$ 41,286	$ 371,572
B.2.2	MML	Magic Mountain Link		$ -	$ -	$ -	$ 758,650	$ 75,865	$ 682,785
B.2.2	MTL2	Mount Lukens 2		$ -	$ -	$ -	$ 818,220	$ 81,822	$ 736,398
B.2.2	PDC	Pacific Design Center		$ -	$ -	$ -	$ 241,099	$ 24,110	$ 216,989
B.2.2	PLM	Los Angeles County Sheriff's Department Palmdale Station		$ -	$ -	$ -	$ 212,651	$ 21,265	$ 191,386
B.2.2	PMT	Pine Mountain		$ -	$ -	$ -	$ 2,027,826	$ 202,783	$ 1,825,043
B.2.2	PWT	Portshead Tank		$ -	$ -	$ -	$ 402,033	$ 40,203	$ 361,830
B.2.2	VPK	Verdugo Peak County)		$ -	$ -	$ -	$ 682,724	$ 68,272	$ 614,452
Subtotal for Additional Sites (Amendment No. 17)				**$ -**	**$ -**	**$ -**	**$ 12,314,857**	**$ 1,231,486**	**$ 11,083,371**
		Project Management	Included	$ -		$ -	$ -	$ -	$ -
Base.22.3.2		Performance Bond	1	$ -	$ -	$ -	$ 193,803	$ -	$ 193,803
		Materials and Labor Bond	Included	$ -	$ -	$ -	$ -	$ -	$ -
		Total Lease Costs		$ -	N/A	$ -	$ -	$ -	$ -
Base.22.2.2		Builder's Insurance	1	$ -	$ -	$ -	$ 372,599	$ -	$ 372,599
Base.22.2.1		Liability Insurance (General and Professional)	1	$ -	$ -	$ -	$ 527,500	$ -	$ 527,500
B.2.2		Phase 2 Completion Acceptance					$ 8,963,268	$ 896,327	$ 8,066,941
ADDITIONAL SITE (AMENDMENT NO. 21)									
B.2.2		**Site Construction**							
B.2.2	JPK2	Johnstone Peak - 2		$ -	$ -	$ -	$ 661,912	$ 66,191	$ 595,721
Subtotal for Additional Site (Amendment No. 21)				**$ -**	**$ -**	**$ -**	**$ 661,912**	**$ 66,191**	**$ 595,721**
ADDITIONAL SITES (AMENDMENT NO. 25)									
B.2.2		**Site Construction**							
B.2.2	BHS	Baldwin Hills County					$ 744,255	$ 74,426	$ 669,830
B.2.2	DPW38	Los Angeles County Department of Public Works Pump Station 38					$ 746,949	$ 74,695	$ 672,254
B.2.2	RPV1	Rancho Palos Verde					$ 344,492	$ 34,449	$ 310,043
Subtotal for Additional Site (Amendment No. 25)				**$ -**	**$ -**	**$ -**	**$ 1,835,696**	**$ 183,570**	**$ 1,652,126**
ADDITIONAL SITE (AMENDMENT NO. 26)									
B.2.2		**Site Construction**							
B.2.2	LAN	Lancaster		$ -	$ -	$ -	$ 8,430	$ 843	$ 7,587
Subtotal for Additional Site (Amendment No. 26)				**$ -**	**$ -**	**$ -**	**$ 8,430**	**$ 843**	**$ 7,587**
ADDITIONAL SITES (AMENDMENT NO. 27)									
B.2.2		**Site Construction**							
B.2.2	BKK	BKK Landfill					$ 313,118	$ 31,312	$ 281,806
B.2.2	UCLA	UCLA (Factor Building)					$ 420,011	$ 42,001	$ 378,010
Subtotal for Additional Sites (Amendment No. 27)				**$ -**	**$ -**	**$ -**	**$ 733,129**	**$ 73,313**	**$ 659,816**
ADDITIONAL SITES (AMENDMENT NO. 29)									
B.2.2		**Site Construction**							
B.2.2	POM	Pomona Courthouse					$ 308,134	$ 30,813	$ 277,321
Subtotal for Additional Sites (Amendment No. 29)							**$ 308,134**	**$ 30,813**	**$ 277,321**
ADDITIONAL SITES (AMENDMENT NO. 30)									
B.2.2		**Site Construction**							
B.2.2	UNIV	Universal Studios					$ 483,007	$ 48,301	$ 434,706
	Subtotal for Additional Sites (Amendment No. 30)						**$ 483,007**	**$ 48,301**	**$ 434,706**
ADDITIONAL SITE (AMENDMENT NO. 34)									
B.2.2		**Site Construction**							
B.2.2	INDWT	Industry Water Tank					$ 503,314	$ 50,331	$ 452,983
	Subtotal for Additional Sites (Amendment No. 34)						**$ 503,314**	**$ 50,331**	**$ 452,983**
ADDITIONAL SITE (AMENDMENT NO. 35)									
B.2.2		**Site Construction**							

AGENDA ITEM J - ENCLOSURE

EXHIBIT C.3 - SCHEDULE OF PAYMENTS
PHASE 2 - SITE CONSTRUCTION AND SITE MODIFICATION

Deliverable/ Task/ Section No. *(Exhibit A, Exhibit B, or Base Document)*	Site ID	Deliverable *(Refer to Site Development Matrix in Exhibit B for further detailes on the capacity and sizes of site components)*	Phase 2 Total						
			Qty.	Unilateral Option Sum for Site Construction Only	Unilateral Option Sum Incuding Project Management	Credits (Note 1)	Contract Sum - Payable Amount for Phase 2 (Note 1,2,3,4,5)	10% Holdback Amount	Payable Amount Less 10% Holdback
B.2.2	WWY	Winding Way					$ 424,516	$ 42,452	$ 382,064
	Subtotal for Additional Sites (Amendment No. 35)						**$ 424,516**	**$ 42,452**	**$ 382,064**
Total for Phase 2 - Site Construction and Modifications (including Subtotals for Site Detail)				**$ -**	**$ -**	**$ -**	**$ 44,811,220**	**$ 4,321,400**	**$ 39,986,506**

Note 1: Pursuant to Amendment No. Nine, effective November 19, 2014, the Authority removed 1 LMR System Site for Phases 1 through 4. As such, Credits were realized in the amount of $646,001. However, the cost for preparing Project Descriptions for 26 potential replacement sites in the amount of $303,524 was utilized in Phase 1. As such, the remaining Credit balance of $342,477 is reserved for use for a future replacement site.

Note 2: Pursuant to Amendment No. Ten, effective February 17, 2015, Exhibit C.2 (Schedule of Prices - Site Construction and Site Modification) was amended by Amendment No. 10 to reflect (a) the conversion of Unilateral Option Sum to Contract Sum for for eight (8) LMR System Site currently contemplated in the Design and the addition of five (5) LMR System Sites; and (b) the removal of four (4) sites.

Note 3: Pursuant to Amendment No. Seventeen, thirty-four (34) LMR System Sites were removed from further consideration; nineteen (19) LMR System Sites were included as part of the LMR System; and Phase 2 Completion Acceptance was included . In connection therewith, and in addition to all activites contemplated in this Phase 2, Unilateral Option Sums, not previosly exercised, were converted into Contract Sums.

Note 4: Pursuant to Amendment No. Nineteen, one (1) LMR System Site was removed from further consideration in Phases 1-4. Also, two (2) LMR System Sites were reconciled in Phases 2-4.

Note 5: Pursuant to Amendment No. Thirty-Two, two (2) LMR System Site were removed from further consideration in Phases 1-4.

EXHIBIT C.4 - SCHEDULE OF PAYMENTS
PHASE 3 - SUPPLY LMR SYSTEM COMPONENTS

Deliverable/ Task/ Section No. *(Exhibit A, Exhibit B, or Base Document)*	Site ID	Deliverable		Equipment Purchase in Phase 1 Credit per Site (Note 1,11,12,13, 14,15)	DTVRS	ACVRS	LARTCS	~~NMDN~~ (Note 17)	Microwave	Credits (Note 2)	Total Contract Sum - Total Payable Amount for Phase 3 (Note 1, 3, 8, 16)	10% Holdback Amount	Payable Amount Less 10% Holdback
B.3.2 to B.3.6		**Equipment Delivery**											
~~B.3.2 to B.3.6~~	~~BAH~~	~~Baldwin Hills~~	$ -	$ -	$ -	$ -	$ -	$ -	$ -	$ -	$ -	$ -	$ -
B.3.2 to B.3.6	BJM	Black Jack Peak	$ -	$ -	$ 917,609	$ 198,138	$ 515,961	$ -	$ 28,058	$ -	$ 1,659,766	$ 165,977	$ 1,493,790
B.3.2 to B.3.6	BMT	Bald Mountain	$ -	$ -	$ 1,351,696	$ -	$ 171,631	$ -	$ 36,032	$ -	$ 1,559,359	$ -	$ 1,559,359
~~B.3.2 to B.3.6~~	~~BRK~~	~~Blue Rock~~	$ -	$ -	$ -	$ -	$ -	$ -	$ -	$ -	$ -	$ -	$ -
~~B.3.2 to B.3.6~~	~~BUR~~	~~Burnt Peak~~	$ -	$ -	$ -	$ -	$ -	$ -	$ -	$ -	$ -	$ -	$ -
~~B.3.2 to B.3.6~~	~~BVG~~	~~Beverly Glen~~	$ -	$ -	$ -	$ -	$ -	$ -	$ -	$ -	$ -	$ -	$ -
B.3.2 to B.3.6	CCB	Compton Court Building	$ -	$ -	$ 482,398	$ 171,692	$ -	$ -	$ 36,176	$ -	$ 690,266	$ -	$ 690,266
~~B.3.2 to B.3.6~~	~~CEP~~	~~Century Plaza~~	$ -	$ -	$ -	$ -	$ -	$ -	$ -	$ -	$ -	$ -	$ -
B.3.2 to B.3.6	CLM	Claremont	$ -	$ -	$ -	$ -	$ -	$ -	$ 30,252	$ -	$ 30,252	$ 3,025	$ 27,227
B.3.2 to B.3.6	CPK	Castro Peak	$ -	$ -	$ 548,134	$ 318,690	$ 381,450	$ -	$ 51,596	$ -	$ 1,299,870	$ 129,987	$ 1,169,883
B.3.2 to B.3.6	DPK	Dakin Peak	$ -	$ -	$ 483,519	$ 198,375	$ 427,810	$ -	$ 39,604	$ -	$ 1,149,308	$ 114,931	$ 1,034,377
~~B.3.2 to B.3.6~~	~~ELSGDPD~~	~~El Segundo PD~~	$ -	$ -	$ -	$ -	$ -	$ -	$ -	$ -	$ -	$ -	$ -
~~B.3.2 to B.3.6~~	~~ENC1~~	~~Encinal 1 (Fire Camp)~~	~~$ -~~	~~$ -~~	~~$ -~~	~~$ -~~	~~$ -~~	~~$ -~~	~~$ -~~	~~$ -~~	~~$ -~~	~~$ -~~	~~$ -~~
B.3.2 to B.3.6	GRM	Green Mountain	$ -	$ -	$ 548,134	$ 231,585	$ 302,182	$ -	$ 64,130	$ -	$ 1,146,032	$ 114,603	$ 1,031,429
B.3.2 to B.3.6	HPK	Hauser Peak	$ -	$ -	$ 917,311	$ 145,772	$ 296,409	$ -	$ 46,753	$ -	$ 1,406,245	$ -	$ 1,406,245
~~B.3.2 to B.3.6~~	~~JPK~~	~~Johnstone Peak~~		~~$ -~~	~~$ -~~	~~$ -~~	~~$ -~~	~~$ -~~	~~$ -~~	~~$ -~~	~~$ -~~		
~~B.3.2 to B.3.6~~	~~LACF028~~	~~FS 28~~	$ -	$ -	$ -	$ -	$ -	$ -	$ -	$ -	$ -	$ -	$ -
~~B.3.2 to B.3.6~~	~~LACF056~~	~~FS 56~~	$ -	$ -	$ -	$ -	$ -	$ -	$ -	$ -	$ -	$ -	$ -
~~B.3.2 to B.3.6~~	~~LACF071~~	~~FS 71~~	$ -	$ -	$ -	$ -	$ -	$ -	$ -	$ -	$ -	$ -	$ -
B.3.2 to B.3.6	LACF072	FS 72	$ -	$ -	$ 546,319	$ 83,252	$ 210,233	$ -	$ 26,897	$ -	$ 866,701	$ 86,670	$ 780,031
~~B.3.2 to B.3.6~~	~~LACF077~~	~~FS 77~~	$ -	$ -	$ -	$ -	$ -	$ -	$ -	$ -	$ -	$ -	$ -
~~B.3.2 to B.3.6~~	~~LACF084~~	~~FS 84~~	$ -	$ -	$ -	$ -	$ -	$ -	$ -	$ -	$ -	$ -	$ -
B.3.2 to B.3.6	LACF091	FS 91	$ -	$ -	$ 176,055	$ -	$ -	$ -	$ -	$ -	$ 176,055	$ 17,606	$ 158,450
~~B.3.2 to B.3.6~~	~~LACF099~~	~~FS 99~~	$ -	$ -	$ -	$ -	$ -	$ -	$ -	$ -	$ -	$ -	$ -
~~B.3.2 to B.3.6~~	~~LACF119~~	~~FS 119~~	$ -	$ -	$ -	$ -	$ -	$ -	$ -	$ -	$ -	$ -	$ -
~~B.3.2 to B.3.6~~	~~LACF144~~	~~FS 144~~	$ -	$ -	$ -	$ -	$ -	$ -	$ -	$ -	$ -	$ -	$ -
~~B.3.2 to B.3.6~~	~~LACF149~~	~~FS 149~~	$ -	$ -	$ -	$ -	$ -	$ -	$ -	$ -	$ -	$ -	$ -
~~B.3.2 to B.3.6~~	~~LACF157~~	~~FS 157~~	$ -	$ -	$ -	$ -	$ -	$ -	$ -	$ -	$ -	$ -	$ -
~~B.3.2 to B.3.6~~	~~LACF196~~	~~FS 169~~	$ -	$ -	$ -	$ -	$ -	$ -	$ -	$ -	$ -	$ -	$ -
~~B.3.2 to B.3.6~~	~~LACFCP09~~	~~CP 9~~	$ -	$ -	$ -	$ -	$ -	$ -	$ -	$ -	$ -	$ -	$ -
B.3.2 to B.3.6	LACFDEL	Los Angeles County Fire Deparmental Del Valle Training Camp	$ -	$ -	$ 372,867	$ 74,338	$ 85,268	$ -	$ 32,590	$ -	$ 565,063	$ 56,506	$ 508,557
~~B.3.2 to B.3.6~~	~~LAH~~	~~LA City Hall~~ (Note 4)	$ -	$ -	$ -	$ -	$ -	$ -	$ -	$ -	$ -	$ -	$ -
~~B.3.2 to B.3.6~~	~~LBR~~	~~Lower Blue Ridge~~	$ -	$ -	$ -	$ -	$ -	$ -	$ -	$ -	$ -	$ -	$ -
B.3.2 to B.3.6	LDWP243	DWP Sylmar Water Ladder	$ -	$ -	$ 431,751	$ 74,185	$ 79,467	$ -	$ 27,849	$ -	$ 613,252	$ -	$ 613,252
~~B.3.2 to B.3.6~~	~~MAM~~	~~Magic Mountain~~		$ -	$ -	$ -	$ -	$ -	$ -	$ -	$ -	$ -	$ -
B.3.2 to B.3.6	MDI	Mount Disappointment	$ -		$ 548,133	$ 271,717	$ 381,450	$ -	$ 30,684	$ -	$ 1,231,986	$ 123,199	$ 1,108,787
	~~MLE~~	~~Mount Lee~~	~~$ -~~	–	~~$ -~~	~~$ -~~	~~$ -~~	~~$ -~~	~~$ -~~	~~$ -~~	~~$ -~~	~~$ -~~	~~$ -~~
B.3.2 to B.3.6	MLM	Mira Loma Facility	$ -	$ -	$ 917,609	$ 121,774	$ 39,740	$ -	$ 31,324	$ -	$ 1,110,448	$ 111,045	$ 999,403
B.3.2 to B.3.6	MMC	Mount McDill	$ -	$ -	$ 483,224	$ 146,308	$ 376,943	$ -	$ 60,498	$ -	$ 1,066,973	$ 106,697	$ 960,276
~~B.3.2 to B.3.6~~	~~MTL~~	~~Mount Lukens~~	$ -	$ -	$ -	$ -	$ -	$ -	$ -	$ -	$ -	$ -	$ -
~~B.3.2 to B.3.6~~	~~MTT~~	~~Mount Thom~~	$ -	$ -	$ -	$ -	$ -	$ -	$ -	$ -	$ -	$ -	$ -
~~B.3.2 to B.3.6~~	~~MTW~~	~~Mount Washington~~	$ -	$ -	$ -	$ -	$ -	$ -	$ -	$ -	$ -	$ -	$ -
B.3.2 to B.3.6	MVS	Monte Vista (Star Center)	$ -	$ -	$ 524,294	$ 95,096	$ -	$ -	$ 30,352	$ -	$ 649,741	$ 0	$ 649,741

AGENDA ITEM J - ENCLOSURE

EXHIBIT C.4 - SCHEDULE OF PAYMENTS
PHASE 3 - SUPPLY LMR SYSTEM COMPONENTS

Deliverable/ Task/ Section No. *(Exhibit A, Exhibit B, or Base Document)*	Site ID	Deliverable		Equipment Purchase in Phase 1 Credit per Site (Note 1,11,12,13, 14,15)	DTVRS	ACVRS	LARTCS	~~NMDN~~ (Note 17)	Microwave	Credits (Note 2)	Total Contract Sum - Total Payable Amount for Phase 3 (Note 1, 3, 8, 16)	10% Holdback Amount	Payable Amount Less 10% Holdback
B.3.2 to B.3.6	OAT	Oat Mountain OAT	$ -	$ -	$ 176,493	$ 162,062	$ -	$ -	$ 80,168	$ -	$ 418,724	$ 41,872	$ 376,852
~~B.3.2 to B.3.6~~	~~OMC~~	~~Oat Mountain OMC~~	$ -	$ -	$ -	$ -	$ -	$ -	$ -	$ -	$ -	$ -	$ -
B.3.2 to B.3.6	ONK	Oat Mountain Nike	$ -	$ -	$ 432,751	$ 146,308	$ 376,943	$ -	$ 27,470	$ -	$ 983,472	$ 26,127	$ 957,345
B.3.2 to B.3.6	PHN	Puente Hills	$ -	$ -	$ 524,774	$ 365,910	$ 297,006	$ -	$ 32,899	$ -	$ 1,220,589	$ -	$ 1,220,589
B.3.2 to B.3.6	PRG	Portal Ridge	$ -		$ 483,223	$ 144,298	$ 299,795	$ -	$ 54,116	$ -	$ 981,434	$ 98,143	$ 883,291
~~B.3.2 to B.3.6~~	~~PSH~~	~~Pomona 1620 Hillcrest~~	~~$ -~~	~~$ -~~	~~$ -~~	~~$ -~~	~~$ -~~	~~$ -~~	~~$ -~~	~~$ -~~	~~$ -~~	~~$ -~~	~~$ -~~
B.3.2 to B.3.6	~~RDNBPD~~	~~Redondo Beach PD~~	$ -	$ -	$ -	$ -	$ -	$ -	$ -	$ -	$ -	$ -	$ -
B.3.2 to B.3.6	RHT	Rolling Hills Transmit	$ -	$ -	$ 917,609	$ 172,269	$ 127,115	$ -	$ 28,417	$ -	$ 1,245,411	$ 124,541	$ 1,120,870
B.3.2 to B.3.6	RIH	Rio Hondo	$ -	$ -	$ 969,351	$ 365,666	$ 79,785	$ -	$ 32,596	$ -	$ 1,447,396	$ 144,740	$ 1,302,656
~~B.3.2 to B.3.6~~	~~RPVE001~~	~~Rancho Palos Verde City Hall~~	$ -	$ -	$ -	$ -	$ -	$ -	$ -	$ -	$ -	$ -	$ -
~~B.3.2 to B.3.6~~	~~SAG~~	~~San Augustine~~	$ -	$ -	$ -	$ -	$ -	$ -	$ -	$ -	$ -	$ -	$ -
B.3.2 to B.3.6	SDW	San Dimas	$ -	$ -	$ 525,073	$ 232,167	$ -	$ -	$ 45,368	$ -	$ 802,608	$ 80,261	$ 722,347
B.3.2 to B.3.6	SGH	Signal Hill(Note 9)	$ -	$ -	$ 483,224	$ -	$ -	$ -	$ 42,926	$ -	$ 526,150	$ 52,615	$ 473,535
~~B.3.2 to B.3.6~~	~~SPC~~	~~San Pedro Hill~~	$ -	$ -	$ -	$ -	$ -	$ -	$ -	$ -	$ -	$ -	$ -
B.3.2 to B.3.6	SPN	Saddle Peak(Note 9)	$ -	$ -	$ 548,134	$ -	$ 296,341	$ -	$ 30,636	$ -	$ 875,110	$ 87,511	$ 787,599
B.3.2 to B.3.6	SUN	Sunset Ridge	$ -	$ -	$ -	$ 205,228	$ 428,999	$ -	$ 35,984	$ -	$ 670,211	$ 67,021	$ 603,190
~~B.3.2 to B.3.6~~	~~SVP~~	~~San Vicente Peak~~	$ -	$ -	$ -	$ -	$ -	$ -	$ -	$ -	$ -	$ -	$ -
~~B.3.2 to B.3.6~~	~~SWP~~	~~Southwest Area Station~~	$ -	$ -	$ -	$ -	$ -	$ -	$ -	$ -	$ -	$ -	$ -
B.3.2 to B.3.6	TOP	Topanga Peak(Note 9)	$ -	$ -	$ 1,002,900	$ 231,585	$ 79,904	$ -	$ 39,457	$ -	$ 1,353,847	$ 135,385	$ 1,218,462
B.3.2 to B.3.6	TPK	Tejon Peak	$ -	$ -	$ 483,224	$ 144,298	$ 211,208	$ -	$ 43,043	$ -	$ 881,773	$ 47,040	$ 834,733
B.3.2 to B.3.6	TWR	Tower Peak	$ -	$ -	$ 482,444	$ 197,515	$ 423,935	$ -	$ 37,676	$ -	$ 1,141,571	$ 114,157	$ 1,027,414
~~B.3.2 to B.3.6~~	~~VPC~~	~~Verdugo Peak (city)~~	$ -	$ -	$ -	$ -	$ -	$ -	$ -	$ -	$ -	$ -	$ -
~~B.3.2 to B.3.6~~	~~WAD~~	~~Walker Drive~~	$ -	$ -	$ -	$ -	$ -	$ -	$ -	$ -	$ -	$ -	$ -
B.3.2 to B.3.6	WMP	Whitaker Middle Peak	$ -		$ 482,412	$ 74,451	$ 85,265	$ -	$ 38,076	$ -	$ 680,207	$ 68,021	$ 612,186
B.3.2 to B.3.6	WS1	100 Wilshire	$ -	$ -	$ -	$ 197,561	$ -	$ -	$ 75,330	$ -	$ 272,892	$ 27,289	$ 245,602
B.3.2 to B.3.6	WTR	Whittaker Ridge	$ -		$ 482,412	$ 145,877	$ 297,675	$ -	$ 42,956	$ -	$ 968,920	$ 96,892	$ 872,028
~~B.3.2 to B.3.6~~	~~LAPD077~~	~~77TH Street Area Complex~~	$ -	$ -	$ -	$ -	$ -	$ -	$ -	$ -	$ -	$ -	$ -
~~B.3.2 to B.3.6~~	~~LAPDDVN~~	~~Devonshire Area station~~	$ -	$ -	$ -	$ -	$ -	$ -	$ -	$ -	$ -	$ -	$ -
B.3.2 to B.3.6	FCCF	L.A. County Fire Command	$ -		$ 548,134	$ 334,775	$ 136,826	$ -	$ 109,185	$ -	$ 1,128,920	$ -	$ 1,128,920
~~B.3.2 to B.3.6~~	~~LAPDVDC~~	~~Valley Dispatch Center~~	$ -	$ -	$ -	$ -	$ -	$ -	$ -	$ -	$ -	$ -	$ -
B.3.2 to B.3.6		FCCF_Core	$ -	$ -	$ 404,329	$ -	$ -	$ -	$ -	$ -	$ 404,329	$ -	$ 404,329
~~B.3.2 to B.3.6~~		~~LAPDVDC_Core~~	~~$ -~~	~~$ -~~	~~$ -~~	~~$ -~~	~~$ -~~	~~$ -~~	~~$ -~~	~~$ -~~	~~$ -~~	~~$ -~~	~~$ -~~
Site Equipment Subtotal			**$ -**	**$ -**	**$ 18,195,540**	**$ 5,250,892**	**$ 6,409,341**	**$ -**	**$ 1,369,100**	**$ -**	**$ 31,224,881**	**$ 2,241,861**	**$ 28,983,020**
ADDITIONAL SITES (AMENDMENT NO. 10)													
B.3.2 to B.3.6		**Equipment Delivery**											
B.3.2 to B.3.6	APC	Airport Courthouse	$ -	$ -	$ 177,033	$ -	$ -	$ -	$ 36,176	$ -	$ 213,209	$ -	$ 213,209
~~B.3.2 to B.3.6~~	~~BCHCPRK~~	~~Beverly Hills' Coldwater Canyon Park~~	$ -	$ -	$ -	$ -	$ -		$ -	$ -	$ -	$ -	$ -
~~B.3.2 to B.3.6~~	~~LACF136~~	~~FS 136~~	$ -	$ -	$ -	$ -	$ -	$ -	$ -	$ -	$ -	$ -	$ -
~~B.3.2 to B.3.6~~	~~LAHE~~	~~LA City Hall East~~ (Note 4)	$ -	$ -	$ -	$ -	$ -	$ -	$ -	$ -	$ -	$ -	$ -
~~B.3.2 to B.3.6~~	~~OLI~~	~~Olinda~~	~~$ -~~	~~$ -~~	~~$ -~~	~~$ -~~			~~$ -~~		~~$ -~~	~~$ -~~	~~$ -~~
Subtotal for Additional Sites (Amendment No. 10)			**$ -**	**$ -**	**$ 177,033**	**$ -**	**$ -**	**$ -**	**$ 36,176**	**$ -**	**$ 213,209**	**$ -**	**$ 213,209**
ADDITIONAL SITES (AMENDMENT NO. 17)													
B.3.2 to B.3.6		**Equipment Delivery**											
B.3.2 to B.3.6	AGH	Agoura Hills	$ -	$ -	$ 546,316	$ 232,589	$ 88,027	$ -	$ 49,600	$ -	$ 916,532	$ 91,653	$ 824,879
B.3.2 to B.3.6	BUR1	Burnt Peak 1	$ -		$ 10,714	$ 144,298	$ 296,341	$ -	$ 33,298	$ -	$ 484,651	$ 48,465	$ 436,186

AGENDA ITEM J - ENCLOSURE

EXHIBIT C.4 - SCHEDULE OF PAYMENTS
PHASE 3 - SUPPLY LMR SYSTEM COMPONENTS

Deliverable/ Task/ Section No. *(Exhibit A, Exhibit B, or Base Document)*	Site ID	Deliverable		Equipment Purchase in Phase 1 Credit per Site (Note 1,11,12,13, 14,15)	DTVRS	ACVRS	LARTCS	~~NMDN~~ (Note 17)	Microwave	Credits (Note 2)	Total Contract Sum - Total Payable Amount for Phase 3 (Note 1, 3, 8, 16)	10% Holdback Amount	Payable Amount Less 10% Holdback
B.3.2 to B.3.6	CCT	Criminal Court (Foltz)	$ -	$ -	$ 547,631	$ 101,375	$ -	$ -	$ 49,600	$ -	$ 698,606	$ -	$ 698,606
B.3.2 to B.3.6	CRN	Cerro Negro	$ -	$ -	$ 700,610	$ 359,241	$ -	$ -	$ 49,600	$ -	$ 1,109,451	$ 110,945	$ 998,506
B.3.2 to B.3.6	FRP	Frost Peak (Upper Blue Ridge)	$ -	$ -	$ 11,540	$ 342,483	$ 382,524	$ -	$ 43,713	$ -	$ 780,260	$ 78,026	$ 702,234
B.3.2 to B.3.6	GMT	Grass Mountain	$ -	$ -	$ -	$ -	$ -	$ -	$ -	$ -	$ 483,223	$ 48,322	$ 434,901
B.3.2 to B.3.6	H-17A	H-17 Helipad	$ -	$ -	$ -	$ -	$ -	$ -	$ -	$ -	$ 215,658	$ 21,566	$ 194,092
B.3.2 to B.3.6	LARICSHQ	LA-RICS Headquarters	$ -	$ -	$ -	$ -	$ -	$ -	$ -	$ -	$ 30,252	$ 3,025	$ 27,227
B.3.2 to B.3.6	LASDTEM	Temple Station	$ -	$ -	$ 218,743	$ -	$ -	$ -	$ 43,430	$ -	$ 262,173	$ -	$ 262,173
B.3.2 to B.3.6	LPC	Loop Canyon	$ -		$ 176,493	$ 74,451	$ 83,473	$ -	$ 105,885	$ -	$ 440,302	$ 44,030	$ 396,272
B.3.2 to B.3.6	LEPS	Lower Encinal Pump Station	$ -	$ -	$ -	$ -	$ -	$ -	$ -	$ -	$ 823,549	$ 82,355	$ 741,194
B.3.2 to B.3.6	MIR	Mirador	$ -	$ -	$ 548,134	$ -	$ -	$ -	$ 27,795	$ -	$ 575,929	$ 57,593	$ 518,336
B.3.2 to B.3.6	MML	Magic Mountain Link	$ -		$ 154,395	$ 144,298	$ 382,884	$ -	$ 89,241	$ -	$ 770,818	$ 77,082	$ 693,736
B.3.2 to B.3.6	MTL2	Mount Lukens 2	$ -		$ 547,298	$ 504,306	$ 299,795	$ -	$ 73,460	$ -	$ 1,424,857	$ 142,486	$ 1,282,371
B.3.2 to B.3.6	PDC	Pacific Design Center	$ -	$ -	$ -	$ -	$ -	$ -	$ -	$ -	$ 742,588	$ 74,259	$ 668,329
B.3.2 to B.3.6	PLM	Palmdale Station	$ -	$ -	$ 177,192	$ -	$ -	$ -	$ 91,168	$ -	$ 672,689	$ -	$ 672,689
B.3.2 to B.3.6	PMT	Pine Mountain	$ -	$ -	$ -	$ -	$ -	$ -	$ -	$ -	$ 483,223	$ 48,322	$ 434,901
B.3.2 to B.3.6	PWT	Portshead Tank	$ -	$ -	$ -	$ -	$ -	$ -	$ -	$ -	$ 314,877	$ 31,488	$ 283,389
B.3.2 to B.3.6	VPK	Verdugo Peak County(Note 9)	$ -	$ -	$ 546,316	$ 232,589	$ 163,600	$ -	$ 49,600	$ -	$ 992,105	$ 26,703	$ 965,403
Subtotal for Additional Sites (Amendment No. 17)				**$ -**	**$ 4,185,382**	**$ 2,135,630**	**$ 1,696,644**	**$ -**	**$ 706,390**	**$ -**	**$ 12,221,743**	**$ 986,320**	**$ 11,235,424**
ADDITIONAL SITE (AMENDMENT NO. 21)													
B.3.2 to B.3.6		**Equipment Delivery**											
B.3.2 to B.3.6	JPK2	Johnstone Peak - 2			$ 10,714	$ 271,717	$ 299,795	$ -	$ 43,712	$ -	$ 625,939	$ 62,594	$ 563,345
Subtotal for Additional Site (Amendment No. 21)			**$ -**	**$ -**	**$ 10,714**	**$ 271,717**	**$ 299,795**	**$ -**	**$ 43,712**	**$ -**	**$ 625,939**	**$ 62,594**	**$ 563,345**
ADDITIONAL SITES (AMENDMENT NO. 25)													
B.3.2 to B.3.6		**Equipment Delivery**											
B.3.2 to B.3.6	BHS	Baldwin Hills County		$ -	$ 1,002,901	$ 163,066	$ -	$ -	$ 79,826	$ -	$ 1,245,793	$ 124,579	$ 1,121,214
B.3.2 to B.3.6	DPW38	Los Angeles County Department of Public Works Pump Station 38		$ -	$ 153,569	$ 146,308	$ 297,675	$ -	$ 63,231	$ -	$ 660,783	$ 66,078	$ 594,705
B.3.2 to B.3.6	RPV1	Rancho Palos Verdes		$ -	$ 177,192	$ -	$ -	$ -	$ 28,417	$ -	$ 205,609	$ 20,561	$ 185,048
Subtotal for Additional Sites (Amendment No. 25)			**$ -**	**$ -**	**$ 1,333,662**	**$ 309,374**	**$ 297,675**	**$ -**	**$ 28,417**	**$ -**	**$ 2,112,185**	**$ 211,219**	**$ 1,900,967**
ADDITIONAL SITE (AMENDMENT NO. 26)													
B.3.2 to B.3.6		**Equipment Delivery**											
B.3.2 to B.3.6	LAN	Lancaster							$ 30,252	$ -	$ 30,252	$ 3,025	$ 27,227
Subtotal for Additional Site (Amendment No. 26)			**$ -**	**$ -**	**$ -**	**$ -**	**$ -**	**$ -**	**$ 30,252**	**$ -**	**$ 30,252**	**$ 3,025**	**$ 27,227**
ADDITIONAL SITES (AMENDMENT NO. 27)													
B.3.2 to B.3.6		**Equipment Delivery**											
B.3.2 to B.3.6	BKK	BKK Landfill			$ 218,743	$ 35,341	$ -		$ 44,353		$ 298,437	$ 29,844	$ 268,593
B.3.2 to B.3.6	UCLA	UCLA (Factor Building)			$ 240,747				$ 38,076		$ 278,823	$ 27,882	$ 250,941
Subtotal for Additional Sites (Amendment No. 27)			**$ -**	**$ -**	**$ 459,490**	**$ 35,341**	**$ -**	**$ -**	**$ 82,429**	**$ -**	**$ 577,260**	**$ 57,726**	**$ 519,534**
ADDITIONAL SITES (AMENDMENT NO. 29)													
B.3.2 to B.3.6		**Equipment Delivery**											
B.3.2 to B.3.6	POM	Pomona Courthouse	$ -		$ 524,294	$ 203,198	$ -	$ -	$ 30,252		$ 757,744	$ 75,774	$ 681,970
Subtotal for Additional Sites (Amendment No. 29)			**$ -**	**$ -**	**$ 524,294**	**$ 203,198**	**$ -**	**$ -**	**$ 30,252**	**$ -**	**$ 757,744**	**$ 75,774**	**$ 681,970**
ADDITIONAL SITES (AMENDMENT NO. 30)													
B.3.2 to B.3.6		**Equipment Delivery**											
B.3.2 to B.3.6	UNIV	Universal Studios	$ -		$ 548,134	$ -	$ 85,268	$ -	$ 38,076		$ 671,478	$ 67,148	$ 604,330

AGENDA ITEM J - ENCLOSURE

EXHIBIT C.4 - SCHEDULE OF PAYMENTS
PHASE 3 - SUPPLY LMR SYSTEM COMPONENTS

Deliverable/ Task/ Section No. *(Exhibit A, Exhibit B, or Base Document)*	Site ID	Deliverable		Equipment Purchase in Phase 1 Credit per Site (Note 1,11,12,13, 14,15)	DTVRS	ACVRS	LARTCS	~~NMDN~~ (Note 17)	Microwave	Credits (Note 2)	Total Contract Sum - Total Payable Amount for Phase 3 (Note 1, 3, 8, 16)	10% Holdback Amount	Payable Amount Less 10% Holdback
Subtotal for Additional Sites (Amendment No. 30)			**$ -**	**$ -**	**$ 548,134**	**$ -**	**$ 85,268**	**$ -**	**$ 38,076**	**$ -**	**$ 671,478**	**$ 67,148**	**$ 604,330**
NMDM (AMENDMENT NO. 32)													
B.3.2 to B.3.6		**Equipment Delivery** (Note 17)											
B.3.2 to B.3.6		Narrowband Mobile Data Network (NMDN)									$ 2,764,124	$ 276,412	$ 2,487,712
Subtotal for NMDM (Amendment No. 32)			**$ -**	**$ -**	**$ -**	**$ -**	**$ -**	**$ -**	**$ -**	**$ -**	**$ 2,764,124**	**$ 276,412**	**$ 2,487,712**
ADDITIONAL SITES (AMENDMENT NO. 34)													
B.3.2 to B.3.6		**Equipment Delivery**											
B.3.2 to B.3.6	INDWT	Industry Water Tank	$ -	$ -	$ 218,743	$ 202,744	$ -	$ -	$ 31,324		$ 452,811	$ 45,281	$ 407,530
Subtotal for Additional Sites (Amendment No. 34)			**$ -**	**$ -**	**$ 218,743**	**$ 202,744**	**$ -**	**$ -**	**$ 31,324**	**$ -**	**$ 452,811**	**$ 45,281**	**$ 407,530**
ADDITIONAL SITES (AMENDMENT NO. 35)													
B.3.2 to B.3.6		**Equipment Delivery**											
B.3.2 to B.3.6	WWY	Winding Way	$ -	$ -	$ 548,134		$ -	$ -	$ 30,252		$ 578,386	$ 57,839	$ 520,547
Subtotal for Additional Sites (Amendment No. 35)			**$ -**	**$ -**	**$ 548,134**	**$ -**	**$ -**	**$ -**	**$ 30,252**	**$ -**	**$ 578,386**	**$ 57,839**	**$ 520,547**
B.3.7		Consoles for LARTCS	$ -	$ -	$ -	$ -	$ -	$ -	$ -	$ -	$ 502,275	$ 50,228	$ 452,048
B.3.8		Logging Recorder	$ -	$ -	$ -	$ -	$ -	$ -	$ -	$ -	$ 1,743,216	$ -	$ 1,743,216
B.3.9		System Management and Monitoring Subsystem	$ -	$ -	$ -	$ -	$ -	$ -	$ -	$ -	$ 445,681	$ 44,568	$ 401,113
~~B.1.6~~		~~FCC Licensing~~ (Note 6)	$ -	$ -	$ -	$ -	$ -	$ -	$ -	$ -	$ -	$ -	$ -
B.3.10		Pre-Installation Testing Acceptance - Core Staging for SOT Prep	$ -	$ -	$ -	$ -	$ -	$ -	$ -	$ -		$ -	$ -
B.3.10.1.DTVRS		Pre-Installation Testing Acceptance - Core Staging for SOT Prep (DTVRS)	$ -	$ -	$ -	$ -	$ -	$ -	$ -	$ -	$ 2,344,147	$ 234,415	$ 2,109,732
B.3.10.1.ACVRS		Pre-Installation Testing Acceptance - Core Staging for SOT Prep (ACVRS)	$ -	$ -	$ -	$ -	$ -	$ -	$ -	$ -	$ 746,582	$ 74,658	$ 671,924
B.3.10.1.LARTCS		Pre-Installation Testing Acceptance - Core Staging for SOT Prep (LARTCS)	$ -	$ -	$ -	$ -	$ -	$ -	$ -	$ -	$ 966,294	$ 96,629	$ 869,664
B.3.10.1.NMDN		Pre-Installation Testing Acceptance - Core Staging for SOT Prep (NMDN)	$ -	$ -	$ -	$ -	$ -	$ -	$ -	$ -	$ 254,660	$ 25,466	$ 229,194
B.3.10.1.FINAL		Pre-Installation Testing Acceptance - Core Staging for SOT Prep FINAL	$ -	$ -	$ -	$ -	$ -	$ -	$ -	$ -	$ 250,626	$ 25,063	$ 225,563
B.3.10.2.BALANCE		Pre-Installation Testing Acceptance - Balance of Sites by Site	$ -	$ -	$ -	$ -	$ -	$ -	$ -	$ -	$ 2,456,627	$ 245,663	$ 2,210,964
		Equipment Shipment: Credit for Portable Radio Upgrades	$ -	$ -	$ -	$ -	$ -	$ -	$ -	$ -	$ (361,900)	$ (36,190)	$ (325,710)
Base.22.3.2		Performance Bond for Phase 3 - Supply LMR System Components	$ -	$ -	$ -	$ -	$ -	$ -	$ -	$ -	$ 474,041		$ 474,041
		Total Lease Costs for Phase 3 - Supply LMR System Components	N/A	$ -	$ -	$ -	$ -	$ -	$ -	$ -	$ -	$ -	$ -

AGENDA ITEM J - ENCLOSURE

EXHIBIT C.4 - SCHEDULE OF PAYMENTS
PHASE 3 - SUPPLY LMR SYSTEM COMPONENTS

Deliverable/ Task/ Section No. *(Exhibit A, Exhibit B, or Base Document)*	Site ID	Deliverable		Equipment Purchase in Phase 1 Credit per Site (Note 1,11,12,13, 14,15)	DTVRS	ACVRS	LARTCS	~~NMDN~~ (Note 17)	Microwave	Credits (Note 2)	Total Contract Sum - Total Payable Amount for Phase 3 (Note 1, 3, 8, 16)	10% Holdback Amount	Payable Amount Less 10% Holdback
Base.22.2.1		Liability Insurance (General and Professional)	$ -	$ -	$ -	$ -	$ -	$ -	$ -	$ -	$ 440,691		$ 440,691
Total for Phase 3 - Supply LMR System Components:			**$ -**	**$ -**	**$ 24,886,115**	**$ 8,206,152**	**$ 8,703,455**	**$ -**	**$ 2,296,476**	**$ -**	**$ 62,492,952**	**$ 4,800,417**	**$ 57,239,724**

Note 1: Pursuant to Amendment No. Three, effective as of December 19, 2013, (a) Contractor's provision and implementation of certain equipment reflected in Exhibit C.2 (Schedule of Payments Phase 1 – System Design) to Exhibit C (Schedule of Payments), as amended by Amendment No. Three, was moved from Phases 3 and 4 to Phase 1; and (b) Contractor was engaged to provide and implement under Phase 1, certain additional equipment reflected in Exhibit C.2 (Schedule of Payments Phase 1 – System Design) to Exhibit C (Schedule of Payments), as amended by Amendment No. Three, (the equipment described in clauses (a) and (b) is collectively referred to as the "Specified Equipment").

In connection therewith, (i) a Unilateral Option Sum in the amount of $4,362,681 was moved from Schedules C.4 (Schedule of Payments Phase 3 – Supply LMR System Components) and C.5 (Schedule of Payments Phase 4 – System Implementation) to Exhibit C (Schedule of Payments) to Schedule C.2 (Schedule of Payments Phase 1 – System Design) to Exhibit C (Schedule of Payments), as amended by Amendment No. Three, and thereafter such Unilateral Option Sum was converted to a Contract Sum; and (ii) a Unilateral Option Sum in the amount of $1,285,230 was added to Schedule C.2 (Schedule of Payments Phase 1 – System Design) to Exhibit C (Schedule of Payments), as amended by Amendment No. Three, and thereafter such Unilateral Option Sum was converted to a Contract Sum.

Note 2: Pursuant to Amendment No. Nine, effective November 19, 2014, the Authority removed 1 LMR System Site for Phases 1 through 4. As such, Credits were realized in the amount of $646,001. However, the cost for preparing Project Descriptions for 26 potential replacement sites in the amount of $303,524 was utilized in Phase 1. As such, the remaining Credit balance of $342,477 is reserved for use for a future replacement site.

Note 3: Pursuant to Amendment No. Ten, effective February 17, 2015, Exhibit C.3 (Schedule of Prices - Supply LMR System Components) was amended by Amendment No. 10 to reflect the conversion of Unilateral Option Sum to Contract Sum for (a) the conversion of Unilateral Option Sum to Contract Sum for for eight (8) LMR System Site currently contemplated in the Design and the addition of five (5) LMR System Sites; and (b) the removal of four (4) sites.
Note 4: Credit in the amount of $547,158 for LAH was moved to LAHE in Amendment No. 10 for recordkeeping purposes.
Note 5: Pursuant to Amendment No. Eleven, effective April 28, 2015, Exhibit C.3 (Schedule of Prices - Supply LMR System Components) was amended by Amendment No. 11 to reflect the a credit in the amount of $547,158 that was moved from LAH to LAHE in Amendment No. 10.
Note 6: Pursuant to Amendment No. Twelve, effective August 27, 2015, Exhibit C.3 (Schedule of Prices - Supply LMR System Components) was amended by Amendment No. 12 to shift FCC Licensing costs to Phase 1, in the amount of $284,041.

Note 7: Pursuant to Amendment No. Sixteen, effective December 23, 2015, the Authority removed thirty-one (31) LMR System Sites for Phase 1. As such, Credits were realized in the amount of $1,132,374. However, adding seventeen (17) new LMR System Sites to Phase 1 in the amount of $635,537 will be taken from the credited amount of $1,132,374, bringing the total amount of credits down to $363,599 (inclusive of Phase 1 Work performed for 75% drawings and building permits in the amount of $133,238) and shall be reflected in the Whitaker Middle Peak site in Phase 3. The remaining Credit balance of $363,599 is reserved for use for a future replacement site(s).

Note 8: Pursuant to Amendment No. Seventeen, thirty-four (34) LMR System Sites were removed from further consideration; nineteen (19) LMR System Sites were included as part of the LMR System; and Phase 3 Completion Acceptance was included . In connection therewith, and in addition to all activites contemplated in this Phase 3, Unilateral Option Sums, not previosly exercised, were converted into Contract Sums.

Note 9: Pursuant to Amendment No. Seventeen, a credit in the amount of $1,002,901 was transferred from Baldwin Hills (BAH) to Saddle Peak (SPN); a credit in the amount of $547,298 was trasferred from Mount Lukens (MTL) to Signal Hill (SGH); a credit in the amount of $522,426 was transferred from Verdugo Peak City (VPC) to Verdugo Peak County (VPK); and a credit in the amount of $547,158 was transferred from LACity Hall East (LAHE) to Topanga Peak (TOP).
Note 10: Pursuant to Amendment No. Nineteen, one (1) LMR System Site was removed from further consideration in Phases 1-4. Also, two (2) LMR System Sites were reconciled in Phases 2-4.
Note 11: Pursuant to Amendment No. Twenty-One, credit in the amount of $563,761 from CPK was moved to BUR1, credit in the amount of $943,771 from MLM was moved to MTL2, credit in the amount of $181,525 from OAT was moved to LPC, credit in the amount of$497,000 from SDW was moved to SUN, credit in the amount of $547,298 from SGH was moved to MML, credit in the amount of $547,158 from TOP was moved to FRP, credit in amount of $497,000 from TPK was moved to MDI.

Note 12: Pursuant to Amendment No. Twenty-Two, credit in the amount of $248,500 from MMC was moved to BJM and credit in the amount of $248,000 from MMC was moved to TWR; credit in the amount of $471,732 from RIH was moved to CPK and credit in the amount of$471,732 from RIH was moved to DPK; credit in the amount of $501,450 from SPN was moved to MIR and credit in the amount of $501,451 from SPN was moved to TPK.
Note 13: Pursuant to Amendment No. Twenty-Four, credit in the amount of $482,444 from MVS was moved to LEPS and credit in the amount of $501,451 from TPK was moved LACDEL.

Note 14: Pursuant to Amendment No. Twenty-Five, credit in the amount of $501,451 from LACFDEL was moved to DPK; credit in the amount of $496,165 from WTR was moved to FRP and $396,000 from WTR was moved to GMT. Credit in the amount of $496,165 from WMP was moved to JPK2 and credit in the amount of $363,599 from WMP was moved to MTL2.

Note 15: Pursuant to Amendment No. Twenty-Six, credit in the amount of $200,000 from BUR1 was moved to DPK, credit in the amount of $363,761 from BUR1 was moved to ENC1. Credit in the amount of $285,000 from JPK2 was moved to SUN, credit in the amount of $440,000 from JPK2 was moved to TWR, and credit in the amount of $268,165 from JPK2 was moved to WS1. Credit in the amount of $181,525 from LPC was moved to H-17A. Credit in the amount of $300,000 from MDI was moved to MIR, credit in the amount of $600,000 from MDI was moved to PDC, and credit in the amount of $141,634 from MDI was moved to PWT. Credit in the amount of $547,298 from MML was moved to BJM. Credit in the amount of $943,771 from MTL2 was moved to RIH and credit in the amount of $363,599 from MTL2 was moved to RIH. Credit in the amount of $480,139 from PRG was moved to PMT.

AGENDA ITEM J - ENCLOSURE

EXHIBIT C.5 - SCHEDULE OF PAYMENTS
PHASE 4 - LMR SYSTEM IMPLEMENTATION

Deliverable/Task /Section No. (Exhibit A, Exhibit B, or Base Document)	Site ID	Deliverable	Phase 4 Total					
			Qty.	Unilateral Option Sum for Site Installation Only	Unilateral Option Sum for Acceptance Including Project Management (Note 1)	Contract Sum - Payable Amount for Phase 4 (Note 8)	10% Holdback Amount	Payable Amount Less 10% Holdback
B.4.2.2		**Site Installation Test Acceptance**						
~~B.4.2.2~~	~~BAH~~	~~Baldwin Hills~~		$ -	$ -	$ -	$ -	$ -
B.4.2.2	BJM	Black Jack Peak		$ -	$ -	$ 212,175	$ 21,217	$ 190,957
B.4.2.2	BMT	Bald Mountain		$ -	$ -	$ 126,074	$ 12,607	$ 113,466
~~B.4.2.2~~	~~BRK~~	~~Blue Rock~~		$ -	$ -	$ -	$ -	$ -
~~B.4.2.2~~	~~BUR~~	~~Burnt Peak~~		$ -	$ -	$ -	$ -	$ -
~~B.4.2.2~~	~~BVG~~	~~Beverly Glen~~		$ -	$ -	$ -	$ -	$ -
B.4.2.2	CCB	Compton Court Building		$ -	$ -	$ 89,559	$ 8,956	$ 80,603
~~B.4.2.2~~	~~CEP~~	~~Century Plaza~~		$ -	$ -	$ -	$ -	$ -
B.4.2.2	CLM	Claremont		$ -	$ -	$ 26,062	$ 2,606	$ 23,456
B.4.2.2	CPK	Castro Peak		$ -	$ -	$ 159,211	$ 15,921	$ 143,290
B.4.2.2	DPK	Dakin Peak		$ -	$ -	$ 186,016	$ 18,602	$ 167,415
~~B.4.2.2~~	~~ELSGDPD~~	~~El Segundo PD~~		$ -	$ -	$ -	$ -	$ -
~~B.4.2.2~~	~~ENC1~~	~~Encinal 1 (Fire Camp)~~		~~$ -~~	~~$ -~~	~~$ 0~~	~~$ 0~~	~~$ 0~~
B.4.2.2	GRM	Green Mountain		$ -	$ -	$ 149,618	$ 14,962	$ 134,656
B.4.2.2	HPK	Hauser Peak		$ -	$ -	$ 158,493	$ 15,849	$ 142,644
~~B.4.2.2~~	~~JPK~~	~~Johnstone Peak~~		~~$ -~~	~~$ -~~	~~$ 0~~	~~$ 0~~	~~$ 0~~
~~B.4.2.2~~	~~LACF028~~	~~FS 28~~		$ -	$ -	$ -	$ -	$ -
~~B.4.2.2~~	~~LACF056~~	~~FS 56~~		$ -	$ -	$ -	$ -	$ -
~~B.4.2.2~~	~~LACF071~~	~~FS 71~~		$ -	$ -	$ -	$ -	$ -
B.4.2.2	LACF072	FS 72		$ -	$ -	$ 98,585	$ 9,858	$ 88,726
~~B.4.2.2~~	~~LACF077~~	~~FS 77~~		$ -	$ -	$ -	$ -	$ -
~~B.4.2.2~~	~~LACF084~~	~~FS 84~~		$ -	$ -	$ -	$ -	$ -
B.4.2.2	LACF091	FS 91		$ -	$ -	$ 42,234	$ 4,223	$ 38,010
~~B.4.2.2~~	~~LACF099~~	~~FS 99~~		$ -	$ -	$ 0	$ -	$ -
~~B.4.2.2~~	~~LACF119~~	~~FS 119~~		$ -	$ -	$ -	$ -	$ -
~~B.4.2.2~~	~~LACF144~~	~~FS 144~~		$ -	$ -	$ -	$ -	$ -
~~B.4.2.2~~	~~LACF149~~	~~FS 149~~		$ -	$ -	$ -	$ -	$ -
~~B.4.2.2~~	~~LACF157~~	~~FS 157~~		$ -	$ -	$ -	$ -	$ -
~~B.4.2.2~~	~~LACF196~~	~~FS 169~~		$ -	$ -	$ -	$ -	$ -
~~B.4.2.2~~	~~LACFCP09~~	~~CP 9~~		$ -	$ -	$ -	$ -	$ -
B.4.2.2	LACFDEL	Los Angeles County Fire Deparmental Del Valle Training Camp		$ -	$ -	$ 59,918	$ 5,992	$ 53,926
~~B.4.2.2~~	~~LAH~~	~~LA City Hall~~		$ -	$ -	$ -	$ -	$ -
~~B.4.2.2~~	~~LBR~~	~~Lower Blue Ridge~~		$ -	$ -	$ -	$ -	$ -
B.4.2.2	LDWP243	DWP Sylmar Water Ladder		$ -	$ -	$ 70,592	$ 7,059	$ 63,532
~~B.4.2.2~~	~~MAM~~	~~Magic Mountain~~		$ -	$ -	$ -	$ -	$ -
B.4.2.2	MDI	Mount Disappointment		$ -	$ -	$ 195,598	$ 19,560	$ 176,038
~~B.4.2.2~~	~~MLE~~	~~Mount Lee~~		~~$ -~~	~~$ -~~	~~$ 0~~	~~$ 0~~	~~$ 0~~
B.4.2.2	MLM	Mira Loma Facility		$ -	$ -	$ 105,662	$ 10,566	$ 95,096
B.4.2.2	MMC	Mount McDill		$ -	$ -	$ 164,568	$ 16,457	$ 148,111
~~B.4.2.2~~	~~MTL~~	~~Mount Lukens~~		$ -	$ -	$ -	$ -	$ -
~~B.4.2.2~~	~~MTT~~	~~Mount Thom~~		$ -	$ -	$ -	$ -	$ -
~~B.4.2.2~~	~~MTW~~	~~Mount Washington~~		$ -	$ -	$ -	$ -	$ -
B.4.2.2	MVS	Monte Vista (Star Center)		$ -	$ -	$ 62,401	$ 6,240	$ 56,161
B.4.2.2	OAT	Oat Mountain OAT		$ -	$ -	$ 31,374	$ 3,137	$ 28,236
~~B.4.2.2~~	~~OMC~~	~~Oat Mountain OMC~~		$ -	$ -	$ -	$ -	$ -
B.4.2.2	ONK	Oat Mountain Nike		$ -	$ -	$ 184,539	$ 18,454	$ 166,085
B.4.2.2	PHN	Puente Hills		$ -	$ -	$ 152,044	$ 15,204	$ 136,839
B.4.2.2	PRG	Portal Ridge		$ -	$ -	$ 133,631	$ 13,363	$ 120,268
~~B.4.2.2~~	~~PSH~~	~~Pomona 1620 Hillcrest~~		~~$ -~~	~~$ -~~	~~$ -~~	~~$ -~~	~~$ -~~
B.4.2.2	~~RDNBPD~~	~~Redondo Beach PD~~		$ -	$ -	$ -	$ -	$ -
B.4.2.2	RHT	Rolling Hills Transmit		$ -	$ -	$ 139,955	$ 13,996	$ 125,960
B.4.2.2	RIH	Rio Hondo		$ -	$ -	$ 134,625	$ 13,462	$ 121,162
~~B.4.2.2~~	~~RPVE001~~	~~Rancho Palos Verde City Hall~~		$ -	$ -	$ -	$ -	$ -
~~B.4.2.2~~	~~SAG~~	~~San Augustine~~		$ -	$ -	$ -	$ -	$ -
B.4.2.2	SDW	San Dimas		$ -	$ -	$ 103,786	$ 10,379	$ 93,407
B.4.2.2	SGH	Signal Hill		$ -	$ -	$ 80,521	$ 8,052	$ 72,469
~~B.4.2.2~~	~~SPC~~	~~San Pedro Hill~~		$ -	$ -	$ -	$ -	$ -
B.4.2.2	SPN	Saddle Peak		$ -	$ -	$ 117,679	$ 11,768	$ 105,911
B.4.2.2	SUN	Sunset Ridge		$ -	$ -	$ 130,041	$ 13,004	$ 117,037
~~B.4.2.2~~	~~SVP~~	~~San Vicente Peak~~		$ -	$ -	$ -	$ -	$ -
~~B.4.2.2~~	~~SWP~~	~~Southwest Area Station~~		$ -	$ -	$ -	$ -	$ -
B.4.2.2	TOP	Topanga Peak		$ -	$ -	$ 126,555	$ 12,655	$ 113,899
B.4.2.2	TPK	Tejon Peak		$ -	$ -	$ 136,015	$ 13,602	$ 122,414
B.4.2.2	TWR	Tower Peak		$ -	$ -	$ 166,972	$ 16,697	$ 150,275
~~B.4.2.2~~	~~VPC~~	~~Verdugo Peak (City)~~		$ -	$ -	$ -	$ -	$ -
~~B.4.2.2~~	~~WAD~~	~~Walker Drive~~		$ -	$ -	$ -	$ -	$ -
B.4.2.2	WMP	Whitaker Middle Peak		$ -	$ -	$ 77,769	$ 7,777	$ 69,993
B.4.2.2	WS1	100 Wilshire		$ -	$ -	$ 87,459	$ 8,746	$ 78,713

EXHIBIT C.5 - SCHEDULE OF PAYMENTS
PHASE 4 - LMR SYSTEM IMPLEMENTATION

Deliverable/Task /Section No. (Exhibit A, Exhibit B, or Base Document)	Site ID	Deliverable	Phase 4 Total					
			Qty.	Unilateral Option Sum for Site Installation Only	Unilateral Option Sum for Acceptance Including Project Management (Note 1)	Contract Sum - Payable Amount for Phase 4 (Note 8)	10% Holdback Amount	Payable Amount Less 10% Holdback
B.4.2.2	WTR	Whittaker Ridge		$ -	$ -	$ 116,681	$ 11,668	$ 105,013
~~B.4.2.2~~	~~LAPD077~~	~~77TH Street Area Complex~~		$ -	$ -	$ -	$ -	$ -
~~B.4.2.2~~	~~LAPDDVN~~	~~Devonshire Area station~~		$ -	$ -	$ -	$ -	$ -
B.4.2.2	FCCF	L.A. County Fire Command		$ -	$ -	$ 215,429	$ 21,543	$ 193,886
~~B.4.2.2~~	~~LAPDVDC~~	~~Valley Dispatch Center~~		$ -	$ -	$ -	$ -	$ -
Phase 4 Subtotals Phase 4 - LMR System Implementation Per Site Detail				**$ -**	**$ -**	**$ 4,041,840**	**$ 404,184**	**$ 3,637,656**
ADDITIONAL SITES (AMENDMENT NO. 10)								
B.4.2.2		**Site Installation Test Acceptance**						
B.4.2.2	APC	Airport Courthouse		$ -	$ -	$ 39,361	$ 3,936	$ 35,425
~~B.4.2.2~~	~~BCHCPRK~~	~~Beverly Hills' Coldwater Canyon Park~~		$ -	$ -	$ -	$ -	$ -
~~B.4.2.2~~	~~LACF136~~	~~FS 136~~		$ -	$ -	$ -	$ -	$ -
~~B.4.2.2~~	~~LAHE~~	~~LA City Hall East~~		$ -	$ -	$ -	$ -	$ -
~~B.4.2.2~~	~~OLI~~	~~Olinda~~		~~$ -~~	~~$ -~~	~~$ -~~	~~$ -~~	~~$ -~~
Subtotal for Additional Sites (Amendment No. 10)				**$ -**	**$ -**	**$ 39,361**	**$ 3,936**	**$ 35,425**
ADDITIONAL SITES (AMENDMENT NO. 17)								
B.4.2.2		**Site Installation Test Acceptance**						
B.4.2.2	AGH	Agoura Hills		$ -	$ -	$ 95,136	$ 9,514	$ 85,622
B.4.2.2	BUR1	Burnt Peak 1		$ -	$ -	$ 112,840	$ 11,284	$ 101,556
B.4.2.2	CCT	Criminal Court (Foltz)		$ -	$ -	$ 88,854	$ 8,885	$ 79,969
B.4.2.2	CRN	Cerro Negro		$ -	$ -	$ 89,001	$ 8,900	$ 80,101
B.4.2.2	FRP	Frost Peak (Upper Blue Ridge)		$ -	$ -	$ 194,565	$ 19,457	$ 175,109
B.4.2.2	GMT	Grass Mountain		$ -	$ -	$ 65,679	$ 6,568	$ 59,111
B.4.2.2	H-17A	H-17 Helipad		$ -	$ -	$ 45,737	$ 4,574	$ 41,163
B.4.2.2	LARICSHQ	LA-RICS Headquarters		$ -	$ -	$ 26,062	$ 2,606	$ 23,456
B.4.2.2	LASDTEM	Los Angeles County Sheriff's Department Temple Station		$ -	$ -	$ 45,805	$ 4,581	$ 41,225
B.4.2.2	LPC	Loop Canyon		$ -	$ -	$ 61,062	$ 6,106	$ 54,956
B.4.2.2	LEPS	Lower Encinal Pump Station		$ -	$ -	$ 87,347	$ 8,735	$ 78,612
B.4.2.2	MIR	Mirador		$ -	$ -	$ 85,601	$ 8,560	$ 77,041
B.4.2.2	MML	Magic Mountain Link		$ -	$ -	$ 205,692	$ 20,569	$ 185,123
B.4.2.2	MTL2	Mount Lukens 2		$ -	$ -	$ 147,781	$ 14,778	$ 133,003
B.4.2.2	PDC	Pacific Design Center		$ -	$ -	$ 102,627	$ 10,263	$ 92,364
B.4.2.2	PLM	Los Angeles County Sheriff's Department Palmdale Station		$ -	$ -	$ 111,498	$ 11,150	$ 100,348
B.4.2.2	PMT	Pine Mountain		$ -	$ -	$ 65,679	$ 6,568	$ 59,111
B.4.2.2	PWT	Portshead Tank		$ -	$ -	$ 61,450	$ 6,145	$ 55,305
B.4.2.2	VPK	Verdugo Peak County		$ -	$ -	$ 117,047	$ 11,705	$ 105,342
Subtotal for Additional Sites (Amendment No. 17)				**$ -**	**$ -**	**$ 1,809,463**	**$ 180,946**	**$ 1,628,517**
ADDITIONAL SITE (AMENDMENT NO. 21)								
B.4.2.2		**Site Installation Test Acceptance**						
B.4.2.2	JPK2	Johnstone Peak - 2		$ -	$ -	$ 131,347	$ 13,135	$ 118,212
Subtotal for Additional Site (Amendment No. 21)				**$ -**	**$ -**	**$ 131,347**	**$ 13,135**	**$ 118,212**
ADDITIONAL SITES (AMENDMENT NO. 25)								
B.4.2.2		**Site Installation Test Acceptance**						
B.4.2.2	BHS	Baldwin Hills County		$ -	$ -	$ 104,318	$ 10,432	$ 93,886
B.4.2.2	DPW38	Los Angeles County Department of Public Works Pump Station 38		$ -	$ -	$ 148,928	$ 14,893	$ 134,035
B.4.2.2	RPV1	Rancho Palos Verdes		$ -	$ -	$ 43,428	$ 4,343	$ 39,085
Subtotal for Additional Site (Amendment No. 25)				**$ -**	**$ -**	**$ 296,674**	**$ 29,667**	**$ 267,007**
ADDITIONAL SITE (AMENDMENT NO. 26)								
B.4.2.2		**Site Installation Test Acceptance**						
B.4.2.2	LAN	Lancaster		$ -	$ -	$ 26,062	$ 2,606	$ 23,456
Subtotal for Additional Site (Amendment No. 26)				**$ -**	**$ -**	**$ 26,062**	**$ 2,606**	**$ 23,456**
ADDITIONAL SITES (AMENDMENT NO. 27)								
B.4.2.2		**Site Installation Test Acceptance**						
B.4.2.2	BKK	BKK Landfill				$ 68,467	$ 6,847	$ 61,620
B.4.2.2	UCLA	UCLA (Factor Building)				$ 60,771	$ 6,077	$ 54,694
Subtotal for Additional Sites (Amendment No. 27)				**$ -**	**$ -**	**$ 129,238**	**$ 12,924**	**$ 116,314**
ADDITIONAL SITES (AMENDMENT NO. 29)								
B.4.2.2		**Site Installation Test Acceptance**						

EXHIBIT C.5 - SCHEDULE OF PAYMENTS
PHASE 4 - LMR SYSTEM IMPLEMENTATION

Deliverable/Task /Section No. (Exhibit A, Exhibit B, or Base Document)	Site ID	Deliverable	Phase 4 Total					
			Qty.	Unilateral Option Sum for Site Installation Only	Unilateral Option Sum for Acceptance Including Project Management (Note 1)	Contract Sum - Payable Amount for Phase 4 (Note 8)	10% Holdback Amount	Payable Amount Less 10% Holdback
B.4.2.2	POM	Pomona Courthouse				$ 104,593	$ 10,459	$ 94,134
Subtotal for Additional Sites (Amendment No. 29)				**$ -**	**$ -**	**$ 104,593**	**$ 10,459**	**$ 94,134**
ADDITIONAL SITES (AMENDMENT NO. 30)								
B.4.2.2		**Site Installation Test Acceptance**						
B.4.2.2	UNIV	Universal Studios				$ 73,533	$ 7,353	$ 66,180
Subtotal for Additional Sites (Amendment No. 30)				**$ -**	**$ -**	**$ 73,533**	**$ 7,353**	**$ 66,180**
ADDITIONAL SITES (AMENDMENT NO. 34)								
B.4.2.2		**Site Installation Test Acceptance**						
B.4.2.2	INDWT	Industry Water Tank				$ 60,655	$ 6,066	$ 54,590
Subtotal for Additional Sites (Amendment No. 34)				**$ -**	**$ -**	**$ 60,655**	**$ 6,066**	**$ 54,590**
ADDITIONAL SITES (AMENDMENT NO. 35)								
B.4.2.2		**Site Installation Test Acceptance**						
B.4.2.2	WWY	Winding Way				$ 61,486	$ 6,149	$ 55,337
Subtotal for Additional Sites (Amendment No. 35)				**$ -**	**$ -**	**$ 61,486**	**$ 6,149**	**$ 55,337**
B.4.1.1.1.5		Consoles	9	$ -	$ -	$ 58,462	$ 5,846	$ 52,616
B.4.1.1.1.5		Logging Recorder	1	$ -	$ -	$ 6,496	$ -	$ 6,496
B.4.1.1.1.7		System Management and Monitoring Subsystem	1	$ -	$ -	Included in Phase 3		
B.1.15		Inventory and Maintenance Tracking Subsystem		$ -	$ -	Included in Phase 3		
B.4.3		Training		$ -	$ -	Included		
B.4.1.2		Spares and Test Equipment	1	$ -	$ -	Included		
B.4.2		Acceptance Testing	1	$ -	$ -			
B.4.2.3		Functional Test Acceptance	1	$ -	$ -	$ 423,142	$ 42,314	$ 380,828
B.4.2.4		Special Operational Test Acceptance	1	$ -	$ -	$ 1,375,212	$ 137,521	$ 1,237,690
B.4.2.5		Voice System Testing Acceptance	1	$ -	$ -	$ 528,928	$ 52,893	$ 476,035
B.4.2.6		Stress Test Acceptance	1	$ -	$ -	$ 105,786	$ 10,579	$ 95,207
B.4.2.8		Voice Wide Area Coverage Test Acceptance		$ -	$ -			
B.4.2.8.Zone 1		Basin Zone Coverage Test Acceptance	1	$ -	$ -	$ 846,284	$ 84,628	$ 761,656
B.4.2.8.Zone 2		Northern Desert Coverage Test Acceptance	1	$ -	$ -	$ 740,499	$ 74,050	$ 666,449
B.4.2.8.Zone 3		Angeles National Forest Coverage Test Acceptance	1	$ -	$ -	$ 634,713	$ 63,471	$ 571,242
B.4.2.8.Zone 4		Santa Monica Mountains Coverage Test Acceptance	1	$ -	$ -	$ 423,142	$ 42,314	$ 380,828
B.4.2.8.Zone 5		CA-14 Corridor Coverage Test Acceptance	1	$ -	$ -	$ 423,142	$ 42,314	$ 380,828
B.4.2.8.Zone 6		Foothills Coverage Test Acceptance	1	$ -	$ -	$ 423,142	$ 42,314	$ 380,828
B.4.2.8.Zone 7		Catalina Island Coverage Test Acceptance	1	$ -	$ -	$ 317,357	$ 31,736	$ 285,621
B.4.2.9		Voice Aerial Coverage Test Acceptance	1	$ -	$ -	$ 105,786	$ 10,579	$ 95,207
B.4.2.10		Voice Waterway Coverage Test Acceptance	1	$ -	$ -	$ 211,571	$ 21,157	$ 190,414
B.4.2.13		Voice Railway Coverage Test Acceptance	1	$ -	$ -	$ 211,571	$ 21,157	$ 190,414
B.4.2.14		Voice Freeway Coverage Test Acceptance	1	$ -	$ -	$ 105,786	$ 10,579	$ 95,207
B.4.2.15		Voice Subscriber Access Test Acceptance	1	$ -	$ -	$ 105,786	$ 10,579	$ 95,207
B.4.2.17		Voice System Burn-in Test Acceptance	1	$ -	$ -	$ 105,786	$ 10,579	$ 95,207
B.4.2.18.1		NMDN Throughput Test Acceptance	1	$ -	$ -	$ 528,928	$ 52,893	$ 476,035
B.4.2.18.2		NMDN Wide Area Coverage Test Acceptance		$ -	$ -			
B.4.2.18.2.Zone 1		Basin Zone Coverage Test Acceptance	1	$ -	$ -	$ 528,928	$ 52,893	$ 476,035
B.4.2.18.2.Zone 2		Northern Desert Coverage Test Acceptance	1	$ -	$ -	$ 423,142	$ 42,314	$ 380,828
B.4.2.18.2.Zone 3		Angeles National Forest Coverage Test Acceptance	1	$ -	$ -	$ 423,142	$ 42,314	$ 380,828
B.4.2.18.2.Zone 4		Santa Monica Mountains Coverage Test Acceptance	1	$ -	$ -	$ 211,571	$ 21,157	$ 190,414
B.4.2.18.2.Zone 5		CA-14 Corridor Coverage Test Acceptance	1	$ -	$ -	$ 211,571	$ 21,157	$ 190,414
B.4.2.18.2.Zone 6		Foothills Coverage Test Acceptance	1	$ -	$ -	$ 211,571	$ 21,157	$ 190,414
B.4.2.18.2.Zone 7		Catalina Island Coverage Test Acceptance	1	$ -	$ -	$ 105,786	$ 10,579	$ 95,207
B.4.2.18.5		NMDN Data Aerial Coverage Test Acceptance	1	$ -	$ -	$ 105,786	$ 10,579	$ 95,207
B.4.2.18.6		NMDN Fire Stn & Parking Coverage Test Acceptance	1	$ -	$ -	$ -	$ -	$ -
B.4.2.18.7		NMDN Freeway Coverage Test Acceptance	1	$ -	$ -	$ 105,786	$ 10,579	$ 95,207

EXHIBIT C.5 - SCHEDULE OF PAYMENTS
PHASE 4 - LMR SYSTEM IMPLEMENTATION

Deliverable/Task /Section No. *(Exhibit A, Exhibit B, or Base Document)*	Site ID	Deliverable	Phase 4 Total					
			Qty.	Unilateral Option Sum for Site Installation Only	Unilateral Option Sum for Acceptance Including Project Management (Note 1)	Contract Sum - Payable Amount for Phase 4 (Note 8)	10% Holdback Amount	Payable Amount Less 10% Holdback
B.4.2.18.8		NMDN Waterway Coverage Test Acceptance	1	$ -	$ -	$ 211,571	$ 21,157	$ 190,414
B.4.2.18.9		NMDN Projected Load Test Acceptance	1	$ -	$ -	$ 211,571	$ 21,157	$ 190,414
B.4.2.18.10		NMDN CAD Baseline System Test Acceptance	1	$ -	$ -	$ 105,786	$ 10,579	$ 95,207
B.4.2.18.11		NMDN Burn-in Test Acceptance	1	$ -	$ -	$ 105,786	$ 10,579	$ 95,207
B.4.4.1		Final Migration/Cutover Plan Delivered		$ -	$ -	Included	$ -	$ -
B.4.5		Final System Support Plan Delivered		$ -	$ -	Included	$ -	$ -
B.4.6		Final Disaster Recovery Plan Delivered		$ -	$ -	Included	$ -	$ -
B.4.7		Final Special Event Plans Delivered		$ -	$ -	Included	$ -	$ -
B.4.8/Base.11.2.1		Final LMR System Acceptance		$ -	$ -	As provided for in Base.11.2.1	$ -	$ -
B.4.9		Final Warranty Plan Delivered		$ -	$ -	Included	$ -	$ -
		Credit for Services Performed in Phase 1	1	$ -	$ -	$ -	$ -	$ -
		Project Management	1	$ -	$ -	Included as Reflected	$ -	$ -
Base.22.3.2		Performance Bond	1	$ -	$ -	$ 99,722	$ -	$ 99,722
		Total Lease Costs		$ -	$ -	$ -	$ -	$ -
Base.22.2.1		Liability Insurance (Professional and General)	1	$ -	$ -	$ 527,500		$ 527,500
B.4.10		Phase 4 Completion Acceptance		$ -	$ -	$ 10,241,502	$ 1,024,150	$ 9,217,352
Total for Phase 4 - LMR System Implementation:				**$ -**	**$ -**	**$ 28,286,484**	**$ 2,759,211**	**$ 25,466,618**

Note 1: Pursuant to Amendment No. Three, effective as of December 19, 2013, (a) Contractor's provision and implementation of certain equipment reflected in Exhibit C.2 (Schedule of Payments Phase 1 – System Design) to Exhibit C (Schedule of Payments), as amended by Amendment No. Three, was moved from Phases 3 and 4 to Phase 1; and (b) Contractor was engaged to provide and implement under Phase 1, certain additional equipment reflected in Exhibit C.2 (Schedule of Payments Phase 1 – System Design) to Exhibit C (Schedule of Payments), as amended by Amendment No. Three, (the equipment described in clauses (a) and (b) is collectively referred to as the "Specified Equipment").

In connection therewith, (i) a Unilateral Option Sum in the amount of $4,362,681 was moved from Schedules C.4 (Schedule of Payments Phase 3 – Supply LMR System Components) and C.5 (Schedule of Payments Phase 4 – System Implementation) to Exhibit C (Schedule of Payments) to Schedule C.2 (Schedule of Payments Phase 1 – System Design) to Exhibit C (Schedule of Payments), as amended by Amendment No. Three, and thereafter such Unilateral Option Sum was converted to a Contract Sum; and (ii) a Unilateral Option Sum in the amount of $1,285,230 was added to Schedule C.2 (Schedule of Payments Phase 1 – System Design) to Exhibit C (Schedule of Payments), as amended by Amendment No. Three, and thereafter such Unilateral Option Sum was converted to a Contract Sum.

Note 2: Pursuant to Amendment No. Nine, effective November 19, 2014, the Authority removed 1 LMR System Site for Phases 1 through 4. As such, Credits were realized in the amount of $646,001. However, the cost for preparing Project Descriptions for 26 potential replacement sites in the amount of $303,524 was utilized in Phase 1. As such, the remaining Credit balance of $342,477 is reserved for use for a future replacement site.

Note 3: Pursuant to Amendment No. Ten, effective February 17, 2015, Exhibit C.4 (Schedule of Prices - LMR System Implementation) was amended by Amendment No. 10 to reflect the conversion of Unilateral Option Sum to Contract Sum for (a) the conversion of Unilateral Option Sum to Contract Sum for for eight (8) LMR System Site currently contemplated in the Design and the addition of five (5) LMR System Sites; and (b) the removal of four (4) sites.

Note 4: Pursuant to Amendment No. Eleven, effective April 28, 2015, Exhibit C.4 (Schedule of Prices - LMR System Implementation) was amended by Amendment No. 11 to reflect the project administration costs for one (1) LMR System Site.

Note 5: Pursuant to Amendment No. Seventeen, thirty-four (34) LMR System Sites were removed from further consideration; nineteen (19) LMR System Sites were included as part of the LMR System; and Phase 4 Completion Acceptance was included . In connection therewith, and in addition to all activites contemplated in this Phase 4, Unilateral Option Sums, not previosly exercised, were converted into Contract Sums.

Note 6: Pursuant to Amendment No. Eleven, effective April 28, 2015, Exhibit C.4 (Schedule of Prices - LMR System Implementation) was amended by Amendment No. 11 to reflect the project administration costs for one (1) LMR System Site.

Note 7: Pursuant to Amendment No. Nineteen, one (1) LMR System Site was removed from further consideration in Phases 1-4. Also, two (2) LMR System Sites were reconciled in Phases 2-4.

Note 8: Pursuant to Amendment No. Thirty-Two, two (2) LMR System Site were removed from further consideration in Phases 1-4.

Note 9: Pursuant to Amendment No. Thirty-Two, the per site NMDM costs contemplated in Phase 3 and Phase 4, have moved to a single line item in the amount of $2,764,123. Resulting Discounts in the amount of $582,086 have been captured in Exhibit C.15 (LMR Discounts), which will be applied at the discretion of the Authority.

SCHEDULE OF PAYMENTS
EXHIBIT C.17 - LMR CHANGE ORDER MODIFICATIONS

Change Order Number	Site ID	Item/Category	Contract Sum - Payable Amount	10% Holdback Amount	Payable Amount Less 10% Holdback Amount
Amendment No. 28					
MSI 003 Revised	OLI	MSI-003 OLI Tower Mapping (Revised)	$ -	$ -	$ -
MSI-007	LDWP243	MSI-007 LDWP243 Additional Structural Analysis for Coverage Enhancement	$ 2,200	$ 220	$ 1,980
MSI-008	LMR	MSI-008 Station B Reprogramming of 700 MHz DTVRS Stations	$ 9,912	$ 991	$ 8,921
MSI-009	AGH	MSI-009 AGH SCE Engineering Fee Reimbursement	$ 5,634	$ 563	$ 5,071
~~MSI-012~~	~~LMR~~	~~MSI-012 Site 3D Models per Authority Request BJM, DPK, TWR~~	~~$ -~~	~~$ -~~	~~$ -~~
MSI-015	BUR1	MSI-015 BUR1 SCE Engineering Fee	$ 3,308	$ 331	$ 2,977
MSI-016	BMT	MSI-016 BMT SCE Engineering Fee	$ 592	$ 59	$ 533
MSI-017	MML	MSI-017 MML SCE Engineering Fee	$ 3,308	$ 331	$ 2,977
Amendment No. 28 Subtotal			**$ 24,953**	**$ 2,495**	**$ 22,458**
Amendment No. 29					
MSI-030	APC	MSI-030 Saturday Labor and Crane Cost	$ 2,405	$ 241	$ 2,165
MSI-020R	BKK	MSI-020R Tower Mapping and Painting	$ 26,225	$ 2,623	$ 23,603
MSI-024	BKK	MSI-024 Dispersive Wave Testing	$ 5,426	$ 543	$ 4,883
MSI-1208	POM	MSI-LMR1208 ACM and LCP Testing Services	$ 4,400	$ 440	$ 3,960
Amendment No. 29 Subtotal			**$ 38,456**	**$ 3,846**	**$ 34,610**
Amendment No. 30					
MSI-1205	MVS	MSI-1205 MVS LCP Testing Services	$ 4,195	$ 420	$ 3,776
Amendment No. 30 Subtotal			**$ 4,195**	**$ 420**	**$ 3,776**
Amendment No. 31					
MSI-1265	ONK	MSI-1265 Environmental Testing ACM and LPC Services	$ 3,633	$ 363	$ 3,270
MSI-1206	CCT	MSI-1206 HVAC Condenser Pad Modification	$ 9,745	$ 975	$ 8,771
MSI-1321	AGH	MSI-1321 Additional Title, Survey, Research	$ 2,100	$ 210	$ 1,890
MSI-1267R	LARICSHQ	MSI-1267R Environmental Testing ACM and LPC Services	$ 4,095	$ 410	$ 3,686
Amendment No. 31 Subtotal			**$ 19,573**	**$ 1,957**	**$ 17,616**
Amendment No. 33					
MSI-1528	MLM	MSI-1528 MLM Tower Light	$ 17,490	$ 1,749	$ 15,741
Amendment No. 33 Subtotal			**$ 17,490**	**$ 1,749**	**$ 15,741**
Amendment No. 34					
MSI-1447	AGH	MSI-1477 AGH Additional Electrical Work	$ 84,503	$ 8,450	$ 76,053
MSI-1435	HPK	MSI-1435 HPK Power Conduit Outside Compound	$ 6,241	$ 624	$ 5,617
Amendment No. 34 Subtotal			**$ 90,744**	**$ 9,074**	**$ 81,670**
Amendment No. 35					
MSI-5002	SDW	MSI-5002 SDW Waveguide Bridge Installation	$ 13,115	$ 1,312	$ 11,804
Amendment No. 35 Subtotal			**$ 13,115**	**$ 1,312**	**$ 11,804**
TOTAL FOR ALL LMR CHANGE ORDER MODIFICATIONS			**$ 208,526**	**$ 20,853**	**$ 187,673**

Note 1: The above identified Change Order Modifications have been fully negotiated between the Authority and the Contractor, and the above amounts represent a full and final resolution of all changes contained in those identified Change Order Modifications.

LOS ANGELES REGIONAL INTEROPERABLE COMMUNICATIONS SYSTEM AUTHORITY

2525 Corporate Place, Suite 100
Monterey Park, California 91754
Telephone: (323) 881-8291
http://www.la-rics.org

SCOTT EDSON
EXECUTIVE DIRECTOR

October 4, 2018

Board of Directors
Los Angeles Regional Interoperable Communications System Authority (the "Authority")

Dear Directors:

APPROVE THE IMPLEMENTATION OF THE LA-RICS INFORMATION TECHNOLOGY AND SECURITY PROGRAM POLICIES (POLICY NOS. 027-2018 AND 028-2018)

SUBJECT

Board approval is requested to approve certain LA-RICS Information Technology (IT) Security Program Policies (Policies) and delegate authority to the Executive Director to implement the Policies. Approval of such Policies will establish and enhance the Authority's IT Security Program. The Joint Operations and Technical Committees (Joint Committees) approved recommending to your Board the adoption of the below Board Policy Nos. 027-2018 and 028-2018.

RECOMMENDED ACTION

It is recommended that your Board:

1. Approve the following enclosed LA-RICS IT Security Program Policies (Policies) to establish and enhance the Authority's Information Technology (IT) Security Program.

   - Board Policy No. 027-2018 – LA-RICS Information Technology Physical Security Policy (Enclosure 1)

   - Board Policy No. 028-2018 – LA-RICS Information Technology Risk Assessment and Audit Compliance Policy (Enclosure 2)

AGENDA ITEM K

2. Authorize the Executive Director to implement appropriate procedures and/or plans necessary to carry out the Policies.

BACKGROUND

On September 13, 2018, your Board approved Board Policy Nos. 024-2018 (LA-RICS Information Technology and Security Program Policy), 025-2018 (Use of LA-RICS Information Technology Resources Policy), and 026-2018 (LA-RICS Antivirus Security Policy) that established the Authority's IT Security Program.

On September 25, 2018, the Joint Committees approved recommending to your Board the adoption of Board Policy Nos. 027-2018 and 028-2018, respectively known as the LA-RICS IT Physical Security Policy and the LA-RICS IT Risk Assessment and Audit Compliance Policy for inclusion into the IT Security Program.

PURPOSE/JUSTIFICATION OF RECOMMENDED ACTION

The approval of the recommended actions will ensure the Authority has Policies in place for inclusion into the Authority's IT Security Program for the protection and use of Authority IT Resources.

Establishment of Policy No. 027-2018 (LA-RICS Information Technology Physical Security Policy) would ensure Authority's IT Resources are protected by security measures that prevent physical tampering, damage, theft, or access. In addition, this policy defines measures that the Authority would adhere to in order to protect its IT Resources, including but not limited to, requiring proper identification, restricting access to IT areas, and physical security controls.

With respect to Policy No. 028-2018 (LA-RICS Information Technology Risk Assessment and Audit Compliance Policy), this policy is necessary in order to ensure the performance of periodic IT risk assessments of Authority IT Resources in order to identify security threats and security vulnerabilities. Further, this policy would also initiate appropriate audits for compliance with all LA-RICS IT Security policies, standards and procedures.

Authority staff is working to develop subsequent security policies that will also become part of the Authority's IT Security Program to present to the Joint Committees and subsequently to your Board for consideration. The expectation is to secure Joint Committees' approval for additional security policies that may be interrelated and present cohesive policies packages to your Board for approval.

FISCAL IMPACT/FINANCING

The activity contemplated in this action have no fiscal impact at this time.

CONCLUSION

Approval of the recommended action will allow the Authority to establish certain LA-RICS Security Policies to enhance the Authority's IT Security Program and allow the Executive Director to implement the policies.

Respectfully submitted,

SCOTT EDSON
EXECUTIVE DIRECTOR

JA:rf:pl

M:\LA-RICS POLICIES\Policy No. 027-2018 (LA-RICS Information Technology Physical Security Policy)\0-Board Item xx - October 4, 2018\1 Draft_Security Policy Board Letter (2018-09-26).docx

Enclosures

cc: Counsel to the Authority

LA-RICS POLICIES

POLICY TITLE		POLICY NO.
LA-RICS Information Technology Physical Security Policy		027-2018
APPROVED BY	EFFECTIVE DATE	DATE LAST REVISED
LA-RICS JPA Board of Directors	---	---

1.0 PURPOSE

To establish an LA-RICS Information Technology (IT) Security policy to ensure that IT Resources are protected by security measures that prevent physical tampering, damage, theft, or access.

2.0 DEFINITION

As used in this Policy No. 027-2018, the following terms shall have the same meaning as set forth in LA-RICS Policy No. 024-2018, Information Technology and Security Program.

- Authority IT Resources, hereinafter referred to as “IT Resources”
- Authority IT Security Incident, hereinafter referred to as “IT Security Incident”
- Authority IT User, hereinafter referred to as “User”
- Chief Information Security Officer, hereinafter referred to as “CISO”

3.0 POLICY

Proper Identification
Access to areas with IT Resources containing confidential information or personal information shall be physically restricted. Each person in these areas shall wear an identification badge on their outer garments, so that both the picture and information on the badge are clearly visible.

Access to Restricted IT Areas
Restricted IT areas include, without limitation, data centers, computer rooms, telephone closets, network router and hub rooms, voicemail system rooms, and similar areas containing IT Resources. All access to these areas shall require authorization by LA-RICS management and shall be appropriately restricted.

Physical Security Controls

A User is considered a custodian for any particularly assigned IT Resource(s). If an item is damaged, lost, stolen, borrowed, or otherwise unavailable for normal business activities, the User shall promptly inform the CISO or his/her designee.

IT Resources containing confidential information or personal information located in unsecured areas shall be secured to prevent physical tampering, damage, theft, or unauthorized physical access.

If feasible, IT Resources owned by LA-RICS shall be marked with some form of identification that clearly indicates it is the property of LA-RICS.

Each User is responsible for notifying the CISO as soon as an IT Security Incident is suspected.

4.0 COMPLIANCE

Authority personnel who violate this Policy No. 027-2018 may be subject to appropriate disciplinary action up to and including discharge as well as both civil and criminal penalties. Non-Authority personnel who violate this Policy No. 027-2018 may be subject to termination of contractual agreements, denial of access to Authority IT Resources, and other actions as appropriate (i.e. cure letter), as well as both civil and criminal penalties.

5.0 POLICY EXCEPTIONS

Requests for exceptions to this Policy No. 027-2018 shall be reviewed by the CISO and shall require approval by the Executive Director. Users requesting exceptions shall provide such requests to the CISO.

The request should specifically state the following:

a. Scope and justification for the exception
b. Potential impact or associated risk upon granting the exception
c. Risk mitigation measures to be undertaken by the Authority
d. Initiatives, actions and a time-frame for achieving the minimum compliance level with the policies set forth herein

The CISO shall review such requests, confer with the requestor, and refer the matter to the Executive Director for action.

References:

- LA-RICS Policy No. 021-2017 (Cybersecurity Incident Response)
- LA-RICS Policy No. 024-2018 (Information Technology and Security Program)
- LA-RICS Policy No. 025-2018 (Use of Information Technology Resources, including the Acceptable Use Agreement)

LA-RICS POLICIES

POLICY TITLE		POLICY NO.
LA-RICS Information Technology Risk Assessment and Audit Compliance Policy		028-2018
APPROVED BY	EFFECTIVE DATE	DATE LAST REVISED
LA-RICS JPA Board of Directors	---	---

1.0 PURPOSE

To ensure the performance of periodic Information Technology (IT) risk assessments of IT Resources in order to identify security threats and security vulnerabilities and also to initiate appropriate audits for compliance with all LA-RICS IT Security policies, standards, and procedures.

2.0 DEFINITION

As used in this Policy No. 028-2018, the following terms shall have the same meaning as set forth in LA-RICS Policy No. 024-2018, Information Technology and Security Program.

- Authority IT Resources, hereinafter referred to as “IT Resources”
- Authority IT Security, hereinafter referred to as “IT Security”
- Authority IT User, hereinafter referred to as “User”
- Chief Information Security Officer, hereinafter referred to as “CISO”

3.0 POLICY

The CISO and/or his/her designee shall periodically conduct and document an IT risk assessment and audit process. IT risk assessments encompass information gathering, analysis, and determination of security vulnerabilities within IT Resources and IT business practices.

IT risk assessments are necessary to analyze and mitigate security threats to IT Resources, which may come from any source, including, but not limited to, natural disasters, disgruntled employees, hackers, the Internet, and equipment or service malfunction/breakdown.

IT risk assessments shall be conducted on all IT Resources and any process or procedure by which IT Resources are utilized and maintained. IT risk assessments shall be performed on each facility that house IT Resources.

An IT risk assessment program (e.g., vulnerability scans of networks, systems and applications that identifies risks) shall include an inventory of IT Resources; review of IT Resource policies, standards, and procedures; review of IT Security policies, standards, and procedures; assessments and prioritization of security threats to, and vulnerabilities within IT Resources; and implementation of safeguards to mitigate any identified threats and/or vulnerabilities within IT Resources.

The CISO shall conduct or coordinate an audit of Users' compliance with IT Resources policies, standards and procedures, and IT Security policies, standards, and procedures. Audits shall be prioritized and scheduled based on risk determined by the CISO.

4.0 COMPLIANCE

Authority personnel who violate any LA-RICS policies related to IT Resources and/or IT Security may be subject to appropriate disciplinary action up to and including discharge as well as both civil and criminal penalties. Non-Authority personnel who violate these same policies may be subject to termination of contractual agreements, denial of access to IT Resources, and other actions as appropriate (i.e. cure letter), as well as both civil and criminal penalties.

5.0 POLICY EXCEPTIONS

Requests for exceptions to this Policy No. 028-2018 shall be reviewed by the CISO and shall require approval by the Executive Director. Users requesting exceptions shall provide such requests to the CISO.

The request should specifically state the following:

a. Scope and justification for the exception
b. Potential impact or associated risk upon granting the exception
c. Risk mitigation measures to be undertaken by the Authority
d. Initiatives, actions and a time-frame for achieving the minimum compliance level with the policies set forth herein

The CISO shall review such requests, confer with the requestor, and refer the matter to the Executive Director for action.

References:

- LA-RICS Policy No. 021-2017 (Cybersecurity Incident Response)
- LA-RICS Policy No. 024-2018 (Information Technology and Security Program)
- LA-RICS Policy No. 025-2018 (Use of Information Technology Resources, including the Acceptable Use Agreement)